TSC2017EVM and TSC2017EVM-PDK

This user's guide describes the characteristics, operation, and use of the TSC2017EVM, both by itself and as part of the TSC2017EVM-PDK. This evaluation module (EVM) is a four-wire resistive touch screen controller EVM which also has auxiliary input and temperature-measuring capabilities. A complete circuit description, schematic diagram, and bill of materials are included.

The following related documents are available through the Texas Instruments Web site at www.ti.com.

EVM-Compatible Device Data Sheets

Device	Literature Number
TSC2017	SBAS472
TAS1020B	SLES025
REG1117-5	SBVS001
TPS767D318	SLVS209
SN74LVC125A	SCAS290
SN74LVC1G125	SCES223
SN74LVC1G07	SCES296

Contents

1 EVM Overview 2
1.1 Features 2
1.2 Introduction 2
2 Analog Interface 3
3 Digital Interface 3
4 Power Supplies 4
4.1 TSC Power 4
4.2 Standalone Operation 4
4.3 USB-MODEVM Interface Power 4
5 EVM Operation 5
5.1 Analog Input 5
5.2 Digital Control 5
5.3 Default Jumper Locations 5
6 EVM-PDK Operation 5
6.1 TSC2017EVM-PDK Setup 5
6.2 Quick Start 8
6.3 GUI and Operation Description 9
6.4 Datalogging 11
7 EVM Bill of Materials 12
7.1 TSC2017 Top Silk Screen 14
8 Schematics 14
8.1 TSC2017EVM Schematic 14
8.2 USB-MODEVM Schematic 14

List of Figures

Microsoft, Windows are registered trademarks of Microsoft Corporation.
I²C is a trademark of NXP Semiconductors.
NI Speedy-33 is a trademark of National Instruments Corporation.
All other trademarks are the property of their respective owners.

Copyright © 2010, Texas Instruments Incorporated

1 TSC2017EVM-PDK Hardware Block Diagram and Connection 6
2 TSC2017EVM-PDK Software GUI Screen 8
3 Four Main Sections in TSC2017EVM-PDK GUI Screen 10

List of Tables

1 Analog Interface Pinout 3
2 Digital Interface Pinout 3
3 Power Supply Pinout 4
4 Power Selection Options: JP1 4
5 List of Jumpers 5
6 USB-MODEVM Switches and Jumpers Default Position 7
7 TSC2017EVM Bill of Materials 12
8 USB-MODEVM Bill of Materials 13

1 EVM Overview

1.1 Features

- Full-featured evaluation board for the TSC2017 four-wire resistive touch screen controller (TSC).
- Modular design for use with a variety of DSP and microcontroller interface boards.

The TSC2017EVM-PDK is a complete evaluation kit, which includes a USB-based motherboard and evaluation software for use with a personal computer running Microsoft® Windows® operating systems.

1.2 Introduction

The TSC2017EVM is designed in the Texas Instruments modular EVM form factor, which allows direct evaluation of the performance and operating characteristics of the TSC2017 and eases software development and system prototyping. This EVM is compatible with the 5-6K Interface Board (SLAU104) from Texas Instruments and additional third-party boards such as the NI Speedy-33™ from National Instruments Corporation.

The TSC2017EVM-PDK is a complete evaluation/demonstration kit, which includes a USB-based motherboard called the USB-MODEVM interface board and evaluation software for use with a personal computer running Microsoft Windows operating systems. The TSC2017EVM-PDK is a package that includes (1) a TSC2017EVM printed circuit board (PCB); (2) a USB-MODEVM PCB; and (3) a CD-ROM with an evaluation software installer and related documentation.

Copyright © 2010, Texas Instruments Incorporated

2 Analog Interface

For maximum flexibility, the TSC2017EVM is designed for easy interfacing to multiple analog sources. Samtec part numbers SSW-110-22-F-D-VS-K and TSM-110-01-T-DV-P provide a convenient 10-pin, dual-row header/socket combination at J1. This header/socket provides access to the analog input pins of the TSC. Consult Samtec at www.samtec.com, or call 1-800-SAMTEC-9 for a variety of mating connector options. Table 1 summarizes the pinouts for the analog interface pinout J1.

Table 1. Analog Interface Pinout

Pin Number	Signal	Description
J1.2	X+	Touch screen X+ electrode
J1.4	X–	Touch screen X– electrode
J1.6	Y+	Touch screen Y+ electrode
J1.8	Y–	Touch screen Y– electrode
J1.12	AUX	Auxiliary input, 0 V to VREF
J1.10, J1.14-J1.20 (even)	Unused	
J1.1-J1.7 (odd), J1.15	Unused	
J1.9-J1-13 (odd) , J1.17, J1.19	AGND	Analog ground

3 Digital Interface

The TSC2017EVM is designed to easily interface with multiple control platforms. Samtec part numbers SSW-110-22-F-D-VS-K and TSM-110-01-T-DV-P provide a convenient 10-pin, dual-row header/socket combination at J2. This header/socket provides access to the digital control and serial data pins of the TSC. Consult Samtec at www.samtec.com or call 1-800-SAMTEC-9 for a variety of mating connector options. Table 2 describes the digital interface pinout.

Table 2. Digital Interface Pinout

Pin Number	Signal	Description
J2.12	RESET	Hardware reset, input to TSC, active low
J2.15	PENIRQ	PENIRQ Pen interrupt output from TSC, active low
J2.16	SCL	I^2C™ bus serial clock
J2.20	SDA	I^2C bus serial data line
J2.4, J2.10, J2-18	DGND	Digital ground
J2.1-J2.13 (odd), J2.17, J2.19	Unused	
J2.2, J2.6, J2.8, J2.14	Unused	

Copyright © 2010, Texas Instruments Incorporated

4 Power Supplies

J3 provides connection to the common power bus for the TSC2017EVM. Power is supplied on the pins listed in Table 3.

Table 3. Power Supply Pinout

Signal	Pin Number		Signal
Unused	1	2	Unused
Unused	3	4	Unused
DGND	5	6	AGND
+1.8VD	7	8	Unused
+3.3VD	9	10	Unused

When power is supplied to J3, JP1 allows for one of two different dc voltages to be selected as the power source for the TSC. See the schematic and PCB silkscreen for details.

The TSC2017EVM-PDK motherboard (the USB-MODEVM interface board) supplies power to J3 of the TSC2017EVM. Power for the motherboard is supplied either through its USB connection or via terminal blocks on the board.

4.1 TSC Power

Power for the TSC2017 VDD can be supplied either from the +1.8-VD terminal or from the +3.3-VD terminal.

JP1 selects the voltage that is routed to the TSC2017. When JP1 is in the default factory condition (shunt on pins 1-2), power to the TSC comes from J3.9 (+3.3 VD). When the shunt is installed on JP1 pins 2-3, power comes from J3.7 (+1.8 VD). Removing the shunt on JP1, the user can connect any dc power supply between 1.6 VD and 3.6 VD to V_{CC} by connecting the power to JP1 pin 2.

Table 4. Power Selection Options: JP1

Shunt on Pins	VDD	Voltage from J3 Pin
1-2	+3.3 VD	9
2-3	+1.8 VD	7
Removed	+1.6 VD to +3.6 VD	External

4.2 Standalone Operation

When used as a standalone EVM, power can be applied to TP1 (V_{CC}), referenced to TP3 (AGND).

CAUTION

Verify that all power supplies are within the safe operating limits shown on the TSC2017 data sheet (SBAS472) before applying power to the EVM.

4.3 USB-MODEVM Interface Power

The USB-MODEVM interface board can be powered from several different sources:

- USB
- 6-VDC to 10-VDC ac/dc external wall supply (not included)
- Laboratory power supply

When powered from the USB connection, JMP6 must have a shunt from pins 1-2 (this is the default factory configuration). When powered from 6 VDC to 10 VDC, either through the J8 terminal block or J9 barrel jack, JMP6 must have a shunt installed on pins 2-3. If power is applied in any of these ways, onboard regulators generate the required supply voltages, and no further power supplies are necessary.

Copyright © 2010, Texas Instruments Incorporated

If laboratory supplies are used to provide the individual voltages required by the USB-MODEVM interface board, JMP6 must have no shunt installed. Voltages then are applied to J2 (+5 VA), J3 (+5 VD), J4 (+1.8 VD), and J5 (+3.3 VD). The +1.8 VD and +3.3 VD also can be generated by the onboard regulators from the +5-VD supply; to enable this supply, the switches on SW1 must be set to enable the regulators by placing them in the ON position (lower position, looking at the board with text reading right side up). If +1.8 VD and +3.3 VD are supplied externally, disable the onboard regulators by placing SW1 switches in the OFF position.

Each power supply voltage has an LED (D1-D7) that lights when the power supplies are active.

5 EVM Operation

This section provides information on the analog input, digital control, and general operating conditions of the TSC2017EVM.

5.1 Analog Input

The analog input sources (touch screen and auxiliary input) can be applied directly to J1 (top or bottom side) or through signal-conditioning modules available for the modular EVM system.

5.2 Digital Control

The digital control signals can be applied directly to J2 (top or bottom side). The modular TSC2017EVM also can be connected directly to a DSP or microcontroller interface board, such as the USB-MODEVM interface board if purchased as part of the TSC2017EVM-PDK. See the device product folder for the TSC2017 for a current list of compatible interface and/or accessory boards.

5.3 Default Jumper Locations

Table 5 provides a list of jumpers found on the EVM and the resepctive factory default conditions.

Table 5. List of Jumpers

Jumper	Shunt Position	Jumper Description
JP1	1-2	Analog power select (default is +3.3 VD)
JP2	Closed	EEPROM address select. When installed and used with the USB-MODEVM, firmware for the motherboard is executed from the EEPROM on the TSC2017EVM. This is the default mode.
JP3	Closed	TSC2017 I^2S slave address A0 bit (default is 1001000b)

6 EVM-PDK Operation

This section provides information on operating the TSC2017EVM-PDK, including setup, program installation, and the GUI and its operation description.

6.1 TSC2017EVM-PDK Setup

6.1.1 Hardware Setup

A TSC2017EVM-PDK includes three components: (1) the TSC2017EVM circuit board; (2) the USB-MODEVM circuit board; and (3) a CDROM with TSC2017EVM-PDK installer and related documentation.

Copyright © 2010, Texas Instruments Incorporated

The hardware block diagram of the TSC2017EVM-PDK is shown in Figure 1, where two circuit boards, TSC2017EVM and USB-MODEVM, are connected. The motherboard is designated as the USB-MODEVM interface board; the daughtercard is the TSC2017EVM described previously in this document. The TSC2017EVM board is plugged on top of the USB-MODEVM board.

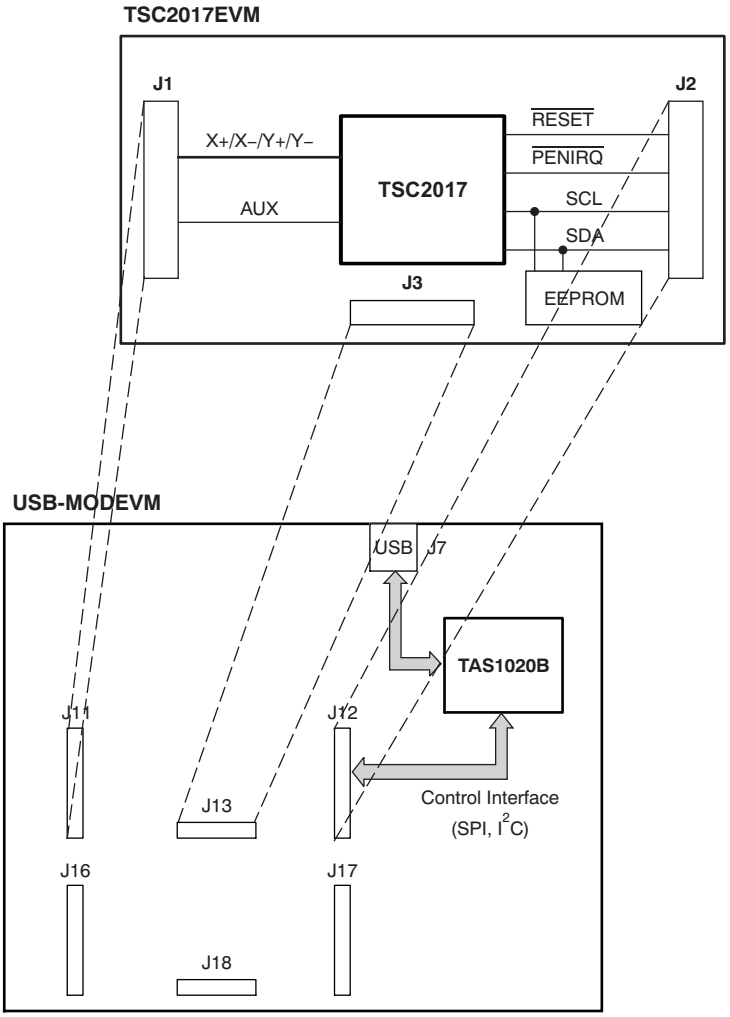

Figure 1. TSC2017EVM-PDK Hardware Block Diagram and Connection

The simple diagram in Figure 1 shows only the basic features of the USB-MODEVM interface board. The board is built around a TAS1020B streaming audio USB controller with an 8051-based core. The board features two positions for modular EVMs, or one double-wide serial modular EVM may be installed.

For use with the TSC2017, the TSC2017EVM is installed in the topmost EVM slot, which connects the TSC2017 digital control interface to the I^2C port, realized using the TAS1020B. Because the TSC2017 has no audio features, the lower EVM slot, which is connected to the TAS1020B digital audio interface, is not used.

Copyright © 2010, Texas Instruments Incorporated

As configured at the factory (shown in Table 6), the board is ready to use with the TSC2017EVM.

Table 6. USB-MODEVM Switches and Jumpers Default Position

Switch or Jumper	Setting
SW1	SW1-1 ON SW1-2 ON
SW2	SW2-1 ON SW2-2 OFF SW2-3 ON SW2-4 ON SW2-5 ON SW2-6 ON SW2-7 ON SW2-8 OFF
SW3	SW3-1 ON SW3-2 OFF SW3-3 OFF SW3-4 OFF SW3-5 OFF SW3-6 OFF SW3-7 OFF SW3-8 OFF
JMP1	Installed
JMP2	Installed
JMP3	Removed
JMP4	Removed
JMP5	Connect 2 to 3
JMP6	Connect 1 to 2 (USB)
JMP7	Connect 2 to 3
JMP8	Removed

All switches and jumpers on both the mother- and daughterboards must stay in the manufacturer default position, as given in Table 5 and Table 6.

6.1.2 Software Installation and Setup

Place the CD-ROM into your PC CD-ROM drive. To install and set up the TSC2017EVM-PDK, execute the following steps:

1. Go to the *Installer* directory on this CD-ROM; find and run *setup.exe*.
2. Accept the license agreement, and continue the installation.
3. Follow the instructions and prompts as they are given.
4. When the installation is completed, click **Finish** on the TSC2017EVM installer window.
5. Restart your computer. (This step may not be necessary, but is suggested.)
6. When your computer has finished restarting, connect the TSC2017EVM via a USB cable to the computer. Microsoft Windows should recognize the new device, and start the *Found New Hardware* wizard sequence.
7. Select **Install from a list or specific location (Advanced)**, and click on *Next>*.
8. Select **Don't Search. I will Choose the driver to install**, and click on *Next>*.
9. If TSC2017EVM is in the list of Models, click on it to select it. You are done.
10. Otherwise, if it is not there, the Windows *Add Hardware* wizard provides a list of common hardware types; find and click on *NI-VISA USB Devices*.
11. Click on *Have Disk...*
12. Select *Browse ...*, and find the file, *TSC2017EVM.inf*, which is included with the installer and, by default, is in the directory:

    C:\Program Files\Texas Instruments\TSC2017EVM \data\
13. Select the *TSC2017EVM.inf* file, and click on it.
14. Your PC then installs it.
15. Click on **Finish** to finish the installation.

Copyright © 2010, Texas Instruments Incorporated

You are done and ready to run the TSC2017EVM software GUI.

6.2 Quick Start

In order to use the touch screen features, a four-wire resistive touch screen must be connected to J1 on the TSC2017EVM. It is important to ensure that the connection between TSC2017 and the touch screen is as short, simple, and secure as possible.

When both hardware and software installation/setup have completed successfully, attach a USB cable from your PC to the USB-MODEVM Interface board (J7 on the motherboard). As configured at the factory, the board is powered from the USB interface; no other external power supply is needed, and the power indicator LEDs on the USB-MODEVM light up.

Also the yellow LED (D2, which is located next to the J7 USB plug) lights up to indicate that the processor on the USB-MODEVM board works and runs the TSC firmware program properly.

Launch the TSC2017 evaluation software on your PC, which you just installed. The software automatically finds the TSC2017EVM, and a screen similar to the one shown in Figure 2 appears.

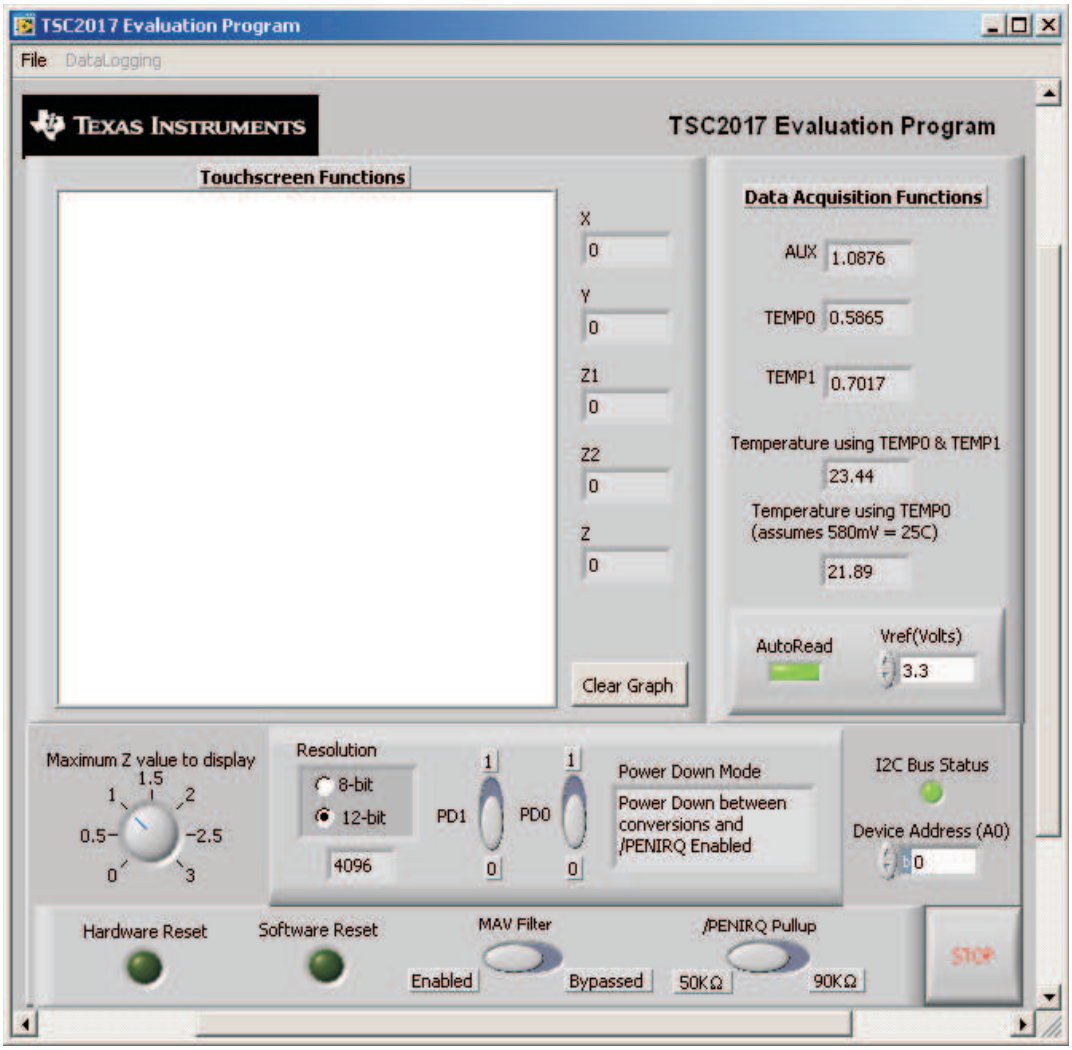

Figure 2. TSC2017EVM-PDK Software GUI Screen

Copyright © 2010, Texas Instruments Incorporated

Note that the I_2C Bus Status shown in the lower right corner (just above the STOP button of the GUI in Figure 2) is green if the driver in your PC has been properly set up, and the TSC slave address is corresponding.

TSC2017 has an address pin A0 that can be set low or high to get the TSC2017 address for either 1001000b (if A0 = low) or 1001001b (if A0 = high). On the TSC2017EVM board, JP3 controls the A0 status. By default, A0 must be installed (refer to Table 5), and thus the default A0 is '0' in the Device Address (A0) selection box. Change it to '1' if TSC2017EVM JP3 is removed (high).

At the startup of the GUI, the non-Touch Data Acquisition section (on the right side) functions and proper temperature data is displayed, as shown in Figure 2.

To stop running the software, you click on the STOP button in the lower right corner of the screen.

6.3 GUI and Operation Description

After the TSC2017EVM-PDK hardware and software installation and setup (described in Section 6.1), evaluation and development with the TSC2017 can begin.

By plugging into a USB port on your PC and starting the TSC2017EVM-PDK software on your PC, the interface GUI is displayed as shown in Figure 2.

The GUI has four general sections (shown in Figure 3):

1. The yellow boxes contain Touchscreen Functions.
2. The blue box contains Data Acquisition Functions.
3. The pink box contains TSC2017 commands.
4. The purple box contains TSC2017 Setup commands.

Copyright © 2010, Texas Instruments Incorporated

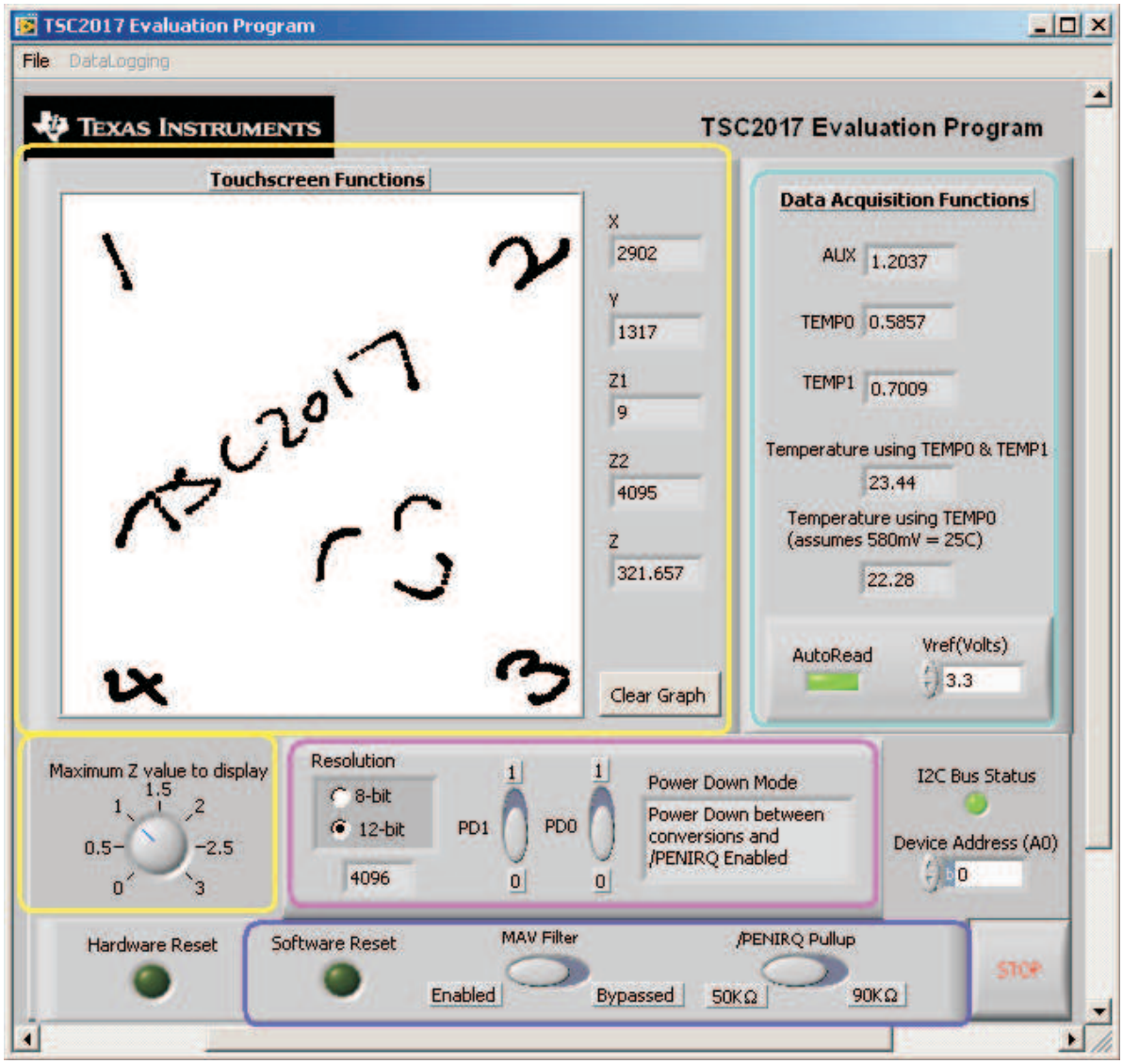

Figure 3. Four Main Sections in TSC2017EVM-PDK GUI Screen

6.3.1 Touchscreen Functions

The Touchscreen Functions section is updated when a touch is detected on the touch screen. As the touch screen is drawn on, the motion on the touch screen is translated into pixels on this box. The software takes X, Y, and Z readings, which are shown to the right of the touch screen box. As the touch pressure is increased, the pixel size increases; a lighter touch results in smaller pixel sizes.

The Z-value displayed is not what is described in the TSC2017 data sheet; this difference is because in the data sheet equation, it is assumed that the sheet resistance of the touch screen being used is known. The value used in this program is calculated by Equation 2 of the TSC2017 data sheet, but without multiplying it by the $R_{X\text{-plate}}$ resistance. This value ranges from 0 to 3 and larger, with larger numbers representing a more forceful pressure on the screen. Using the **Maximum Z Value to Display** knob, you can set a threshold so that the program does not display lightly pressed points. This threshold setting helps to eliminate display of spurious points that may result from touch screen mechanical bouncing.

The display can be cleared by pressing the **Clear Graph** button on the screen.

Copyright © 2010, Texas Instruments Incorporated

6.3.2 Data Acquisition Functions

The TSC2017 has provision for measuring one auxiliary input voltages (AUX) and temperature. This section displays the measured values for these parameters. Measurements are updated only when the touch screen is not being pressed and auto-reading mode is enabled (the AutoRead LED button is on).

Temperature is displayed using both methods described in the TSC2017 data sheet. Using the TEMP0 and TEMP1 measurements, a temperature reading with 2°C resolution and accuracy is achieved. Using only the TEMP0 measurement, a reading with 0.3°C resolution is possible, but this option requires knowing the TEMP0 value at 25°C; this normally is a calibration that the user performs. This program assumes that TEMP0 = 580 mV at 25°C.

By default, AutoRead LED is on. That is, the software continuously reads nontouch data, AUX, TEMP1 and TEMP2, and automatically updates them in the *Non-Touch Data Acquisition* section. To stop the data acquisition, click on the green LED *AutoRead* to turn it off.

Both AUX and temperature measurements require a reference voltage, which is provided to the TSC2017 VREF pin. The V_{REF} (volts) controller box can be written with the corresponding V_{REF} voltage. The factory default V_{REF} is 3.3 VDC.

6.3.3 TSC2017 Command

The TSC2017 can be configured to operate in 8-bit or 12-bit resolution modes. Control over the mode used is selected in this section, which is sent to TSC2017 in the command byte.

The two power-down bits, PD1 and PD0, of the TSC2017 can be set from this panel as well. A brief description of the mode selected is shown on the screen when setting these bits; see Table 2 (Command Byte Definitions) of the TSC2017 data sheet (SBAS472) for details on what these bits do.

6.3.4 TSC2017 Setup Command

TSC2017 has several software programmable features that can be set up by TSC2017 in the setup mode, a specific command called Setup.

Software reset can bring TSC2017 to its power-up default condition. When clicking on the LED and it becomes green, the TSC2017 is software reset.

TSC2017 has a built-in MAV filter, which is enabled by default. The MAV filter can be disabled/enabled by clicking on the *MAV Filter* button.

The PENIRQ signal from the TSC2017 can be used as an interrupt to the host, and it requires being pulled up by a resistor. The TSC2017 has an internal pullup R_{IRQ}, and thus no external pullup is needed. The internal pullup R_{IRQ} can be selected and programmed to be either 50 kΩ (default) or 90 kΩ. The *Internal PENIRQ Pullup* button is used to select the R_{IRQ}.

For more details on the programmable features and Setup mode of the TSC2017, see the product data sheet (SBAS472), .

6.3.5 TSC2017 Hardware Reset

Clicking on the *Hardware Reset* LED in the lower right corner of the GUI turns the LED switch on or off. When the LED is turned on or lit (in green), the hardware reset pin $\overline{\text{RESET}}$ is pulled low by a digital control signal from the USB-MODEVM board, and the TSC2017 enters the hardware reset process. To bring TSC2017 back to normal operational state, the LED must be turned off.

6.4 Datalogging

The software can record the data it takes from the TSC2017 to a tab-delimited file, suitable for importing into spreadsheets. To do this, first go into the *File* menu, and select *Log Data to File...*, which opens a file-select window and allows you to specify a file to which to write the data. At the same time, this enables the Datalogging menu.

Copyright © 2010, Texas Instruments Incorporated

When ready to begin recording data to a file, select *Datalogging → Start Logging*. Data are written to the file until *Datalogging → Stop Logging* is selected. When the screen is not touched, the AUX and TEMP values are written to the file, and the X, Y, Z1, and Z2 parameters are written to the file with values of **9999**, to indicate that they are not updated. When the screen is touched, the X, Y, Z1, and Z2 parameters are written while the AUX and TEMP values are written to the file as **9999**. Because the program constantly updates at a rate of approximately 400 readings per second, datalog files can quickly grow large; therefore, log only that data which are necessary.

The format of the data file has the first column as the time in milliseconds (which is just a timer in the program; it can arbitrarily start at any number), then X, Y, Z1, Z2, AUX, TEMP0, and TEMP1 columns.

Every new reading is a new row in the file.

7 EVM Bill of Materials

Table 7 and Table 8 contain a complete bill of materials for the modular TSC2017EVM evaluation board and the USB-MODEVM interface board, respectively (included only in the TSC2017EVM-PDK).

Table 7. TSC2017EVM Bill of Materials

Count	Ref Des	Description	Manufacturer	Mfg Part No.
1	NA	Printed Wiring Board	TI	6513588
3	C1, C3, C8	CAP CER 0.1 µF 50V 10% X7R 0603	Murata	GRM188R71H104KA93D
1	C2	CAP CER 10 µF 6.3V X5R 20% 0603	TDK	C1608X5R0J106M
0	C4, C5, C6, C7	Not Installed		
1	C9	CAP CER 10 µF 10V 10% X5R 0805	Murata	GRM219R61A106KE44D
2	J1, J2	10 Pin, Dual Row, SM Header (20 Pos.)	Samtec	TSM-110-01-T-DV-P
2	J1B, J2B	10 Pin, Dual Row, SM Header (20 Pos.)	Samtec	SSW-110-22-F-D-VS-K
1	J3	5 Pin, Dual Row, SM Header (10 Pos.)	Samtec	TSM-105-01-T-DV-P
1	J3B	5 Pin, Dual Row, SM Header (10 Pos.)	Samtec	SSW-105-22-F-D-VS-K
1	JP1	3 Position Header	Samtec	TSW-103-22-T-S
2	JP2, JP3	2 Position Header	Samtec	TSW-102-22-T-S
3	R1, R2, R6	RES 20.0 kΩ 1/10W 1% 0603 SMD	Yageo	RC0603FR-0720KL
1	R3	RES 100 Ω 1/10W 1% 0603 SMD	Yageo	RC0603FR-07100RL
2	R4, R5	RES 2.74 kΩ 1/10W 1% 0603 SMD	Yageo	RC0603FR-072K74L
10	TP1, TP4–TP12	TEST POINT PC MINI 0.040"D RED	Keystone	5000
2	TP2, TP3	TEST POINT PC MINI 0.040"D BLACK	Keystone	5001
1	U1	12-Bit Nanopower, four-wire Micro TOUCH SCREEN CONTROLLER with I2C™ Interface	TI	TSC2017IYZG
1	U2	IC EEPROM 256KBIT 400KHZ 8TSSOP	Microchip	24AA256-I/ST
Additional Components				
3	NA	0.100 Shunt – Black Shunts	Samtec	SNT-100-BK-T

Notes: 1. J1B, J2B, J3B bottom side parts are not shown in the schematic diagram
J1B is installed on the bottom side of the PWB opposite J1.
J2B is installed on the bottom side of the PWB opposite J2.
J3B is installed on the bottom side of the PWB opposite J3.

2. Refer to the PCA assembly instruction (6513588_ASSY_A.PDF – Assembly Drawing).

3. Manufacturer and Part Numbers for items may be substituted with electrically equivalent items.

Copyright © 2010, Texas Instruments Incorporated

Table 8. USB-MODEVM Bill of Materials

Reference Designator	Description	Manufacturer	Manufacturer's Part No.
R4	10Ω 1/10W 5% Chip Resistor	Panasonic	ERJ-3GEYJ100V
R10, R11	27.4Ω 1/16W 1% Chip Resistor	Panasonic	ERJ-3EKF27R4V
R20	75Ω 1/4W 1% Chip Resistor	Panasonic	ERJ-14NF75R0U
R19	220Ω 1/10W 5% Chip Resistor	Panasonic	ERJ-3GEYJ221V
R14, R21, R22	390Ω 1/10W 5% Chip Resistor	Panasonic	ERJ-3GEYJ391V
R13	649Ω 1/16W 1% Chip Resistor	Panasonic	ERJ-3EKF6490V
R9	1.5KΩ 1/10W 5% , Chip Resistor	Panasonic	ERJ-3GEYJ152V
R1–R3, R5–R8	2.7KΩ 1/10W 5% , Chip Resistor	Panasonic	ERJ-3GEYJ272V
R12	3.09KΩ 1/16W 1% , Chip Resistor	Panasonic	ERJ-3EKF3091V
R15, R16	10KΩ 1/10W 5%, Chip Resistor	Panasonic	ERJ-3GEYJ103V
R17, R18	100KΩ 1/10W 5%, Chip Resistor	Panasonic	ERJ-3GEYJ104V
RA1	10KΩ 1/8W Octal Isolated, Resistor Array	CTS Corporation	742C163103JTR
C18, C19	33pF 50V Ceramic, Chip Capacitor, ±5%, NPO	TDK	C1608C0G1H330J
C13, C14	47pF 50V Ceramic, Chip Capacitor, ±5%, NPO	TDK	C1608C0G1H470J
C20	100pF 50V Ceramic Chip Capacitor, ±5%, NPO	TDK	C1608C0G1H101J
C21	1000pF 50V Ceramic Chip Capacitor, ±5%, NPO	TDK	C1608C0G1H102J
C15	0.1μF 16V Ceramic Chip Capacitor, ±10%,X7R	TDK	C1608X7R1C104K
C16, C17	0.33μF 16V Ceramic Chip Capacitor, ±20%,Y5V	TDK	C1608X5R1C334K
C9–C12–C28	1μF 6.3V Ceramic Chip Capacitor, ±10%, X5R	TDK	C1608X5R0J105K
C1–C8	10μF 6.3V Ceramic Chip Capacitor, ±10%, X5R	TDK	C3216X5R0J106K
D1	50V, 1A, Diode MELF SMD	Micro Commercial Components	DL4001
D2	Yellow Light Emitting Diode	Lumex	SML-LX0603YW-TR
D3, D4, D6, D7	Green Light Emitting Diode	Lumex	SML-LX0603GW-TR
D5	Red Light Emitting Diode	Lumex	SML-LX0603IW-TR
Q1, Q2	N-Channel MOSFET	Zetex	ZXMN6A07F
X1	6MHz Crystal SMD	Epson	MA-505 6.000M-C0
U8	USB Streaming Controller	Texas Instruments	TAS1020BPFB
U2	5V LDO Regulator	Texas Instruments	REG1117-5
U9	3.3V/1.8V Dual Output LDO Regulator	Texas Instruments	TPS767D318PWP
U3, U4	Quad, 3-State Buffers	Texas Instruments	SN74LVC125APW
U5–U7	Single IC Buffer Driver with Open Drain o/p	Texas Instruments	SN74LVC1G07DBVR
U10	Single 3-State Buffer	Texas Instruments	SN74LVC1G125DBVR
U1	64K 2-Wire Serial EEPROM I^2C	Microchip	24LC64I/SN
	USB-MODEVM PCB	Texas Instruments	6463995
TP1–TP6, TP9–TP11	Miniature test point terminal	Keystone Electronics	5000
TP7, TP8	Multipurpose test point terminal	Keystone Electronics	5011
J7	USB Type B Slave Connector Thru-Hole	Mill-Max	897-30-004-90-000000
J1–J5, J8	2-position terminal block	On Shore Technology	ED555/2DS
J9	2.5mm power connector	CUI Stack	PJ-102B
J10	BNC connector, female, PC mount	AMP/Tyco	414305-1
J11A, J12A, J21A, J22A	20-pin SMT plug	Samtec	TSM-110-01-L-DV-P
J11B, J12B, J21B, J22B	20-pin SMT socket	Samtec	SSW-110-22-F-D-VS-K
J13A, J23A	10-pin SMT plug	Samtec	TSM-105-01-L-DV-P
J13B, J23B	10-pin SMT socket	Samtec	SSW-105-22-F-D-VS-K
J6	4-pin double row header (2x2) 0.1"	Samtec	TSW-102-07-L-D
J14, J15	12-pin double row header (2x6) 0.1"	Samtec	TSW-106-07-L-D
JMP1–JMP4	2-position jumper, 0.1" spacing	Samtec	TSW-102-07-L-S

Copyright © 2010, Texas Instruments Incorporated

Table 8. USB-MODEVM Bill of Materials (continued)

Reference Designator	Description	Manufacturer	Manufacturer's Part No.
JMP8–JMP14	2-position jumper, 0.1" spacing	Samtec	TSW-102-07-L-S
JMP5, JMP6	3-position jumper, 0.1" spacing	Samtec	TSW-103-07-L-S
JMP7	3-position dual row jumper, 0.1" spacing	Samtec	TSW-103-07-L-D
SW1	SMT, half-pitch 2-position switch	C&K Division, ITT	TDA02H0SK1
SW2	SMT, half-pitch 8-position switch	C&K Division, ITT	TDA08H0SK1
	Jumper plug	Samtec	SNT-100-BK-T

7.1 TSC2017 Top Silk Screen

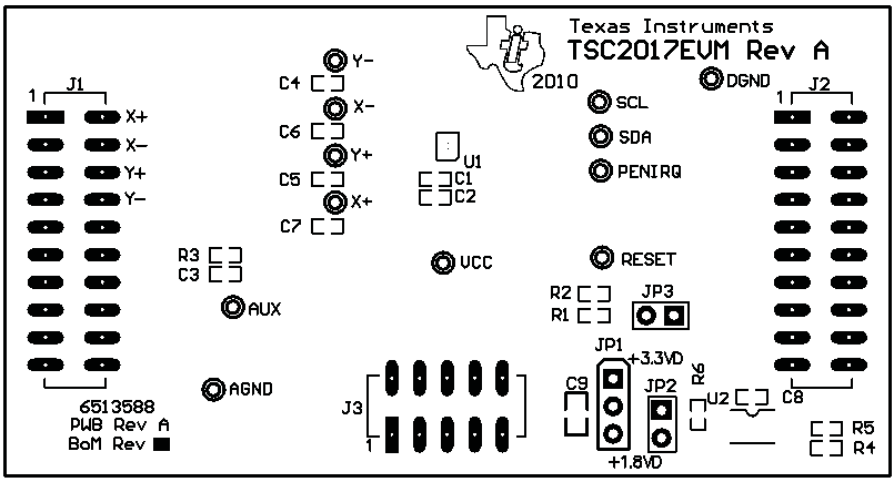

8 Schematics

8.1 TSC2017EVM Schematic

The schematic diagram is provided as a reference.

8.2 USB-MODEVM Schematic

The schematic diagram is provided as a reference.

Copyright © 2010, Texas Instruments Incorporated

Revision History

Changes from Original (January, 2010) to A Revision	Page
• Corrected error in Figure 1	6

NOTE: Page numbers for previous revisions may differ from page numbers in the current version.

Copyright © 2010, Texas Instruments Incorporated

Revision History		
REV	ECN Number	Approved

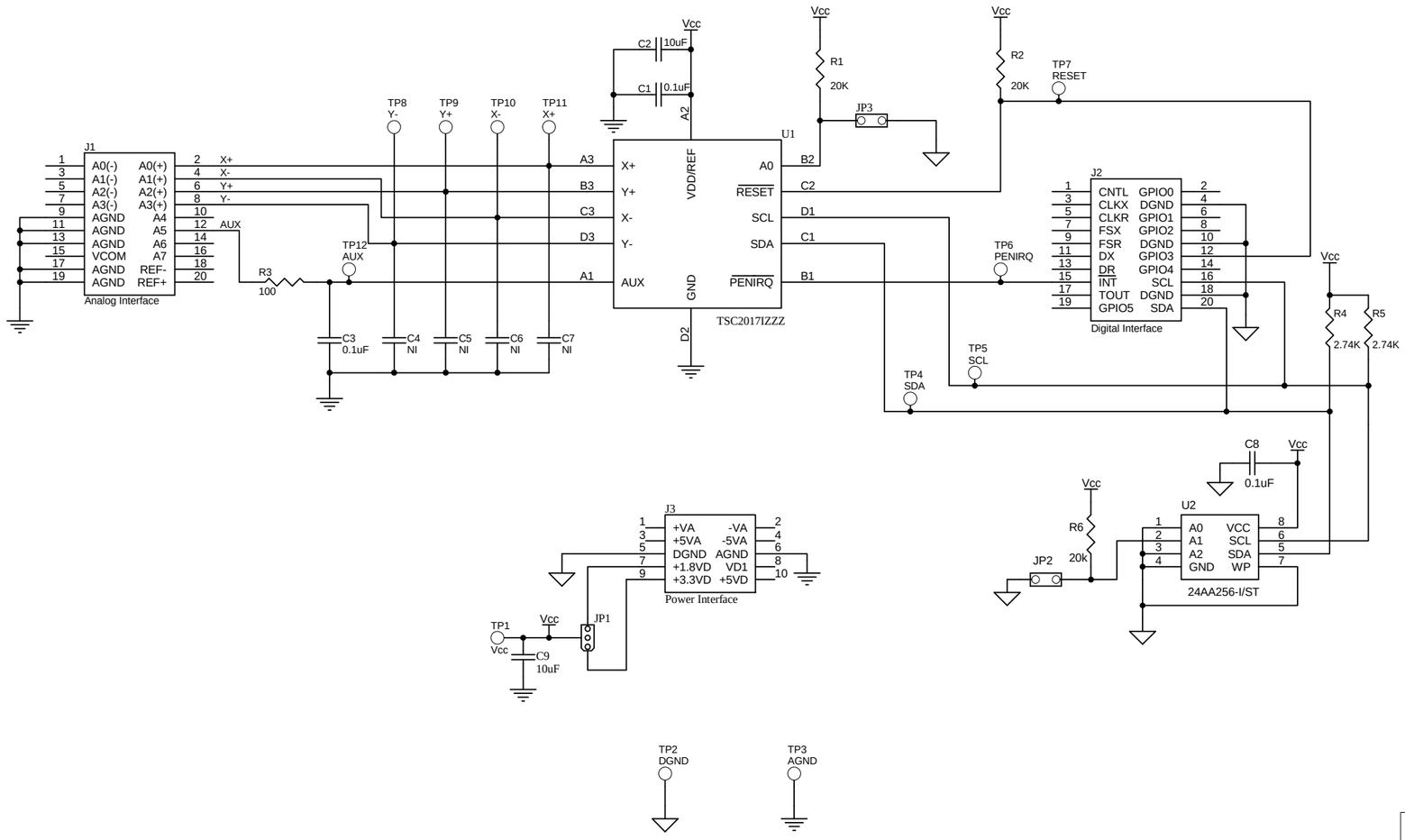

TEXAS INSTRUMENTS

12500 TI Blvd. Dallas, Texas 75243

Title: **TSC2017 Evaluation Module**

Engineer: **Wendy Fang**			
Drawn By: **Lisa Parker**	SIZE:	DATE: 6-Jan-2010	REV: **A**
FILE: **6513588**			SHEET: **1** OF: **1**

REVISION HISTORY		
REV	ENGINEERING CHANGE NUMBER	APPROVED

IOVDD
Q1 ZXMN6A07F
SDA
J6
EXTERNAL I2C
Q2 ZXMN6A07F
SCL
TP10
TP9
+3.3VD
R3 2.7K
R5 2.7K
+3.3VD
U1
VCC SDA SCL
VSS A0 A1 A2 WP
C9 1uF
24LC64I/SN
C18 33pF
X1
MA-505 6.000M-C0
6.00 MHZ
C19 33pF
J7 USB SLAVE CONN
GND D+ D- VCC
897-30-004-90-000000
R9 1.5K
R10 27.4
R11 27.4
C20 100pF
C21 .001uF
R12 3.09K
C13 47pF
C14 47pF
U8
TAS1020BPFB
SCL SDA VREN RESET MCLKO2 MCLKO1 CSCLK CDATO CDATI CSYNC CRESET CSCHNE
XTALO XTALI PLLFILI PLLFILO MCLKI PUR DP DM DVSS DVSS DVSS AVSS
P1.7 P1.6 P1.5 P1.4 P1.3 P1.2 P1.1 P1.0 DVDD DVDD DVDD AVDD
MRESET TEST EXTEN RSTO P3.0 P3.1 P3.2/XINT P3.3 P3.4 P3.5 NC NC
TP11 MRESET
+3.3VD
R13 649
USB ACTIVE
D2 SML-LX0603YW-TR
YELLOW
C24 1uF
C10 1uF
C11 1uF
C12 1uF
+3.3VD
JMP8 P1.3
JMP9 P1.2
JMP10 P1.1
JMP11 P1.0
JMP12 P3.5
JMP13 P3.4
JMP14 P3.3
U3
SN74LVC125APW
USB MCK
USB I2S
1A 2A 3A 4A 1OE 2OE 3OE 4OE VCC 1Y 2Y 3Y 4Y GND
C22 1uF
IOVDD
C28 1uF
U10
SN74LVC1G125DBV
J10 EXT MCLK
R20 75
MCLK
I2SDIN
BCLK
LRCLK
I2SDOUT
+3.3VD
RA1 10K
SW2
A0 A1 A2 USB I2S USB MCK USB SPI USB RST EXT MCK
SW DIP-8
R6 2.7K
U5
SN74LVC1G07DBV
C23 1uF
IOVDD
J14
EXTERNAL AUDIO DATA
+3.3VD
R7 2.7K
C26 1uF
IOVDD
U7
SN74LVC1G07DBV
PWR_DWN
MISO
MOSI
SS
SCLK
RESET
C27 1uF
IOVDD
U4
SN74LVC125APW
1A 2A 3A 4A 1OE 2OE 3OE 4OE VCC 1Y 2Y 3Y 4Y GND
J15
EXTERNAL SPI
USB RST
USB SPI
INT
+3.3VD
R8 2.7K
C25 1uF
IOVDD
U6
SN74LVC1G07DBV
J8
ED555/2DS
EXT PWR IN
6VDC-10VDC IN
JMP6
PWR SELECT
+5VD
R14 390
D3 SML-LX0603GW-TR
GREEN
U9
TPS767D318PWP
1IN 1IN 1EN 1GND 2GND 2EN 2IN 2IN 1RESET 1OUT 1OUT 2RESET 2OUT 2OUT
R17 100K
C7 10uF
+1.8VD
R18 100K
+3.3VD
R19 220
C8 10uF
D4 SML-LX0603GW-TR
GREEN
R4 10
D5 SML-LX0603IW-TR
RED
C17 0.33uF
R15 10K
R16 10K
SW1
1.8VD ENABLE
3.3VD ENABLE
REGULATOR ENABLE
J9
CUI-STACK PJ102-B
2.5 MM
D1 DL4001
U2
REG1117-5
VIN GND VOUT
C15 0.1uF
C16 0.33uF
C6 10uF
+5VD
+3.3VD
+1.8VD
IOVDD
JMP7
IOVDD SELECT
TP6

ENGINEER **RICK DOWNS**	TITLE **USB-MODEVM INTERFACE**		
DRAWN BY **ROBERT BENJAMIN**			
DOCUMENT CONTROL NO. **6463996**	SIZE **B**	DATE **10-Jun-2004**	REV **A**
SHEET **1** OF **2**	FILE **G:\USB Motherboard - Modular Evm\Schematic\USB Motherboard - ModEvm.ddb - Docume**		

TEXAS INSTRUMENTS
DATA ACQUISITION PRODUCTS
HIGH PERFORMANCE ANALOG DIVISION
SEMICONDUCTOR GROUP
6730 SOUTH TUCSON BLVD., TUCSON, AZ 85706 USA

REVISION HISTORY		
REV	ENGINEERING CHANGE NUMBER	APPROVED

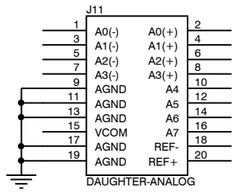

J11A (TOP) = SAM_TSM-110-01-L-DV-P
J11B (BOTTOM) = SAM_SSW-110-22-F-D-VS-K

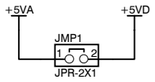

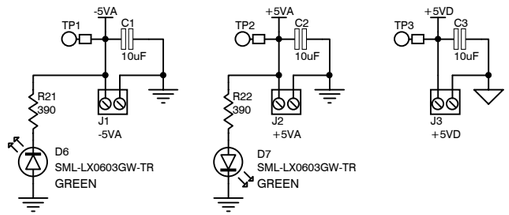

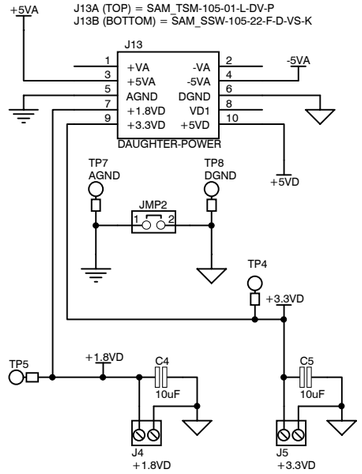

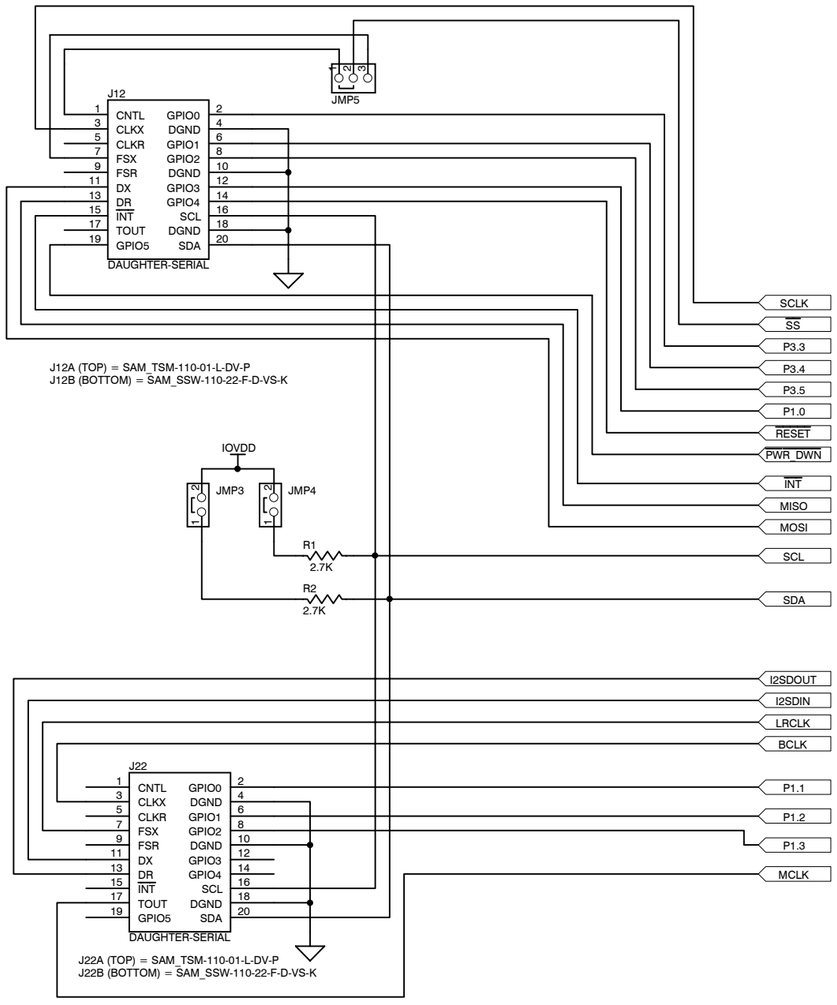

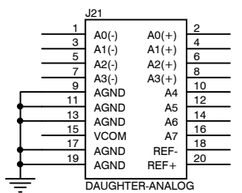

J21A (TOP) = SAM_TSM-110-01-L-DV-P
J21B (BOTTOM) = SAM_SSW-110-22-F-D-VS-K

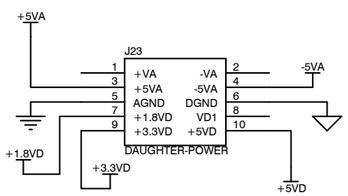

J23A (TOP) = SAM_TSM-105-01-L-DV-P
J23B (BOTTOM) = SAM_SSW-105-22-F-D-VS-K

TEXAS INSTRUMENTS

DATA ACQUISITION PRODUCTS
HIGH-PERFORMANCE ANALOG DIVISION
SEMICONDUCTOR GROUP

6730 SOUTH TUCSON BLVD., TUCSON, AZ 85706 USA

TITLE **USB-MODEVM INTERFACE**

ENGINEER **RICK DOWNS**			
DRAWN BY **ROBERT BENJAMIN**			
DOCUMENT CONTROL NO. **6463996**	SIZE **B**	DATE **10-Jun-2004**	REV **A**
SHEET **2** OF **2**	FILE **G:\USB Motherboard - Modular Evm\Schematic\USB Motherboard - ModEvm.ddb - Docume**		

Evaluation Board/Kit Important Notice

Texas Instruments (TI) provides the enclosed product(s) under the following conditions:

This evaluation board/kit is intended for use for **ENGINEERING DEVELOPMENT, DEMONSTRATION, OR EVALUATION PURPOSES ONLY** and is not considered by TI to be a finished end-product fit for general consumer use. Persons handling the product(s) must have electronics training and observe good engineering practice standards. As such, the goods being provided are not intended to be complete in terms of required design-, marketing-, and/or manufacturing-related protective considerations, including product safety and environmental measures typically found in end products that incorporate such semiconductor components or circuit boards. This evaluation board/kit does not fall within the scope of the European Union directives regarding electromagnetic compatibility, restricted substances (RoHS), recycling (WEEE), FCC, CE or UL, and therefore may not meet the technical requirements of these directives or other related directives.

Should this evaluation board/kit not meet the specifications indicated in the User's Guide, the board/kit may be returned within 30 days from the date of delivery for a full refund. THE FOREGOING WARRANTY IS THE EXCLUSIVE WARRANTY MADE BY SELLER TO BUYER AND IS IN LIEU OF ALL OTHER WARRANTIES, EXPRESSED, IMPLIED, OR STATUTORY, INCLUDING ANY WARRANTY OF MERCHANTABILITY OR FITNESS FOR ANY PARTICULAR PURPOSE.

The user assumes all responsibility and liability for proper and safe handling of the goods. Further, the user indemnifies TI from all claims arising from the handling or use of the goods. Due to the open construction of the product, it is the user's responsibility to take any and all appropriate precautions with regard to electrostatic discharge.

EXCEPT TO THE EXTENT OF THE INDEMNITY SET FORTH ABOVE, NEITHER PARTY SHALL BE LIABLE TO THE OTHER FOR ANY INDIRECT, SPECIAL, INCIDENTAL, OR CONSEQUENTIAL DAMAGES.

TI currently deals with a variety of customers for products, and therefore our arrangement with the user **is not exclusive.**

TI assumes **no liability for applications assistance, customer product design, software performance, or infringement of patents or services described herein.**

Please read the User's Guide and, specifically, the Warnings and Restrictions notice in the User's Guide prior to handling the product. This notice contains important safety information about temperatures and voltages. For additional information on TI's environmental and/or safety programs, please contact the TI application engineer or visit www.ti.com/esh.

No license is granted under any patent right or other intellectual property right of TI covering or relating to any machine, process, or combination in which such TI products or services might be or are used.

FCC Warning

This evaluation board/kit is intended for use for **ENGINEERING DEVELOPMENT, DEMONSTRATION, OR EVALUATION PURPOSES ONLY** and is not considered by TI to be a finished end-product fit for general consumer use. It generates, uses, and can radiate radio frequency energy and has not been tested for compliance with the limits of computing devices pursuant to part 15 of FCC rules, which are designed to provide reasonable protection against radio frequency interference. Operation of this equipment in other environments may cause interference with radio communications, in which case the user at his own expense will be required to take whatever measures may be required to correct this interference.

EVM Warnings and Restrictions

It is important to operate this EVM within the input voltage range of 0 V to 3.6 V and the output voltage range of 0 V to 3.6 V .

Exceeding the specified input range may cause unexpected operation and/or irreversible damage to the EVM. If there are questions concerning the input range, please contact a TI field representative prior to connecting the input power.

Applying loads outside of the specified output range may result in unintended operation and/or possible permanent damage to the EVM. Please consult the EVM User's Guide prior to connecting any load to the EVM output. If there is uncertainty as to the load specification, please contact a TI field representative.

During normal operation, some circuit components may have case temperatures greater than 30° C. The EVM is designed to operate properly with certain components above 85° C as long as the input and output ranges are maintained. These components include but are not limited to linear regulators, switching transistors, pass transistors, and current sense resistors. These types of devices can be identified using the EVM schematic located in the EVM User's Guide. When placing measurement probes near these devices during operation, please be aware that these devices may be very warm to the touch.

Mailing Address: Texas Instruments, Post Office Box 655303, Dallas, Texas 75265
Copyright © 2010, Texas Instruments Incorporated

IMPORTANT NOTICE

Texas Instruments Incorporated and its subsidiaries (TI) reserve the right to make corrections, modifications, enhancements, improvements, and other changes to its products and services at any time and to discontinue any product or service without notice. Customers should obtain the latest relevant information before placing orders and should verify that such information is current and complete. All products are sold subject to TI's terms and conditions of sale supplied at the time of order acknowledgment.

TI warrants performance of its hardware products to the specifications applicable at the time of sale in accordance with TI's standard warranty. Testing and other quality control techniques are used to the extent TI deems necessary to support this warranty. Except where mandated by government requirements, testing of all parameters of each product is not necessarily performed.

TI assumes no liability for applications assistance or customer product design. Customers are responsible for their products and applications using TI components. To minimize the risks associated with customer products and applications, customers should provide adequate design and operating safeguards.

TI does not warrant or represent that any license, either express or implied, is granted under any TI patent right, copyright, mask work right, or other TI intellectual property right relating to any combination, machine, or process in which TI products or services are used. Information published by TI regarding third-party products or services does not constitute a license from TI to use such products or services or a warranty or endorsement thereof. Use of such information may require a license from a third party under the patents or other intellectual property of the third party, or a license from TI under the patents or other intellectual property of TI.

Reproduction of TI information in TI data books or data sheets is permissible only if reproduction is without alteration and is accompanied by all associated warranties, conditions, limitations, and notices. Reproduction of this information with alteration is an unfair and deceptive business practice. TI is not responsible or liable for such altered documentation. Information of third parties may be subject to additional restrictions.

Resale of TI products or services with statements different from or beyond the parameters stated by TI for that product or service voids all express and any implied warranties for the associated TI product or service and is an unfair and deceptive business practice. TI is not responsible or liable for any such statements.

TI products are not authorized for use in safety-critical applications (such as life support) where a failure of the TI product would reasonably be expected to cause severe personal injury or death, unless officers of the parties have executed an agreement specifically governing such use. Buyers represent that they have all necessary expertise in the safety and regulatory ramifications of their applications, and acknowledge and agree that they are solely responsible for all legal, regulatory and safety-related requirements concerning their products and any use of TI products in such safety-critical applications, notwithstanding any applications-related information or support that may be provided by TI. Further, Buyers must fully indemnify TI and its representatives against any damages arising out of the use of TI products in such safety-critical applications.

TI products are neither designed nor intended for use in military/aerospace applications or environments unless the TI products are specifically designated by TI as military-grade or "enhanced plastic." Only products designated by TI as military-grade meet military specifications. Buyers acknowledge and agree that any such use of TI products which TI has not designated as military-grade is solely at the Buyer's risk, and that they are solely responsible for compliance with all legal and regulatory requirements in connection with such use.

TI products are neither designed nor intended for use in automotive applications or environments unless the specific TI products are designated by TI as compliant with ISO/TS 16949 requirements. Buyers acknowledge and agree that, if they use any non-designated products in automotive applications, TI will not be responsible for any failure to meet such requirements.

Following are URLs where you can obtain information on other Texas Instruments products and application solutions:

Products		**Applications**	
Amplifiers	amplifier.ti.com	Audio	www.ti.com/audio
Data Converters	dataconverter.ti.com	Automotive	www.ti.com/automotive
DLP® Products	www.dlp.com	Communications and Telecom	www.ti.com/communications
DSP	dsp.ti.com	Computers and Peripherals	www.ti.com/computers
Clocks and Timers	www.ti.com/clocks	Consumer Electronics	www.ti.com/consumer-apps
Interface	interface.ti.com	Energy	www.ti.com/energy
Logic	logic.ti.com	Industrial	www.ti.com/industrial
Power Mgmt	power.ti.com	Medical	www.ti.com/medical
Microcontrollers	microcontroller.ti.com	Security	www.ti.com/security
RFID	www.ti-rfid.com	Space, Avionics & Defense	www.ti.com/space-avionics-defense
RF/IF and ZigBee® Solutions	www.ti.com/lprf	Video and Imaging	www.ti.com/video
		Wireless	www.ti.com/wireless-apps

Mailing Address: Texas Instruments, Post Office Box 655303, Dallas, Texas 75265
Copyright © 2010, Texas Instruments Incorporated