P/N: TSC1141M DATE SHEET

Feature



- Approved for use with the Broadcom BCM5226and Level One LXT9784.
- Compliant with IEEE 802.3u and ANSI X3.263 standards including 350 µH OCL with 8 mA bias.
- Operating Temperature range: -40℃ to +85℃.
- Storage temperature range: -40℃ to +125℃.

Electrical Specifications @ 25°C

Part Number	Turns Ratio (±5%)		OCL (uH Min) @ 100KHz/0.1Vrms with 8mA/DC Bias	HI-POT (Vrms)	Insertion Loss (dB Max)
	TX	RX			0.3-100 MHz
TSC1141M	1:1	1:1	350	1500	-1.0

Continue

Part Number	Return Loss (dB Min)				Cross talk (dB Min)				DCMR TX/RX(dB Min)	
	2-30MHz	40MHz	50MHz	60-80MHz	1KHz	30MHz	60MHz	100MHz	1-60MHz	60-200MHz
TSC1141M	-18	-14.4	-13.1	-12	-65	-50	-40	-35	-40	-35

Schematic

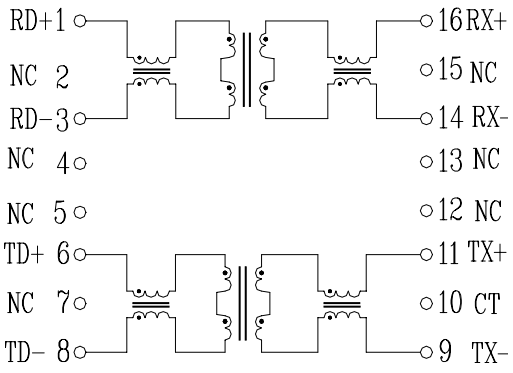

Mechanical

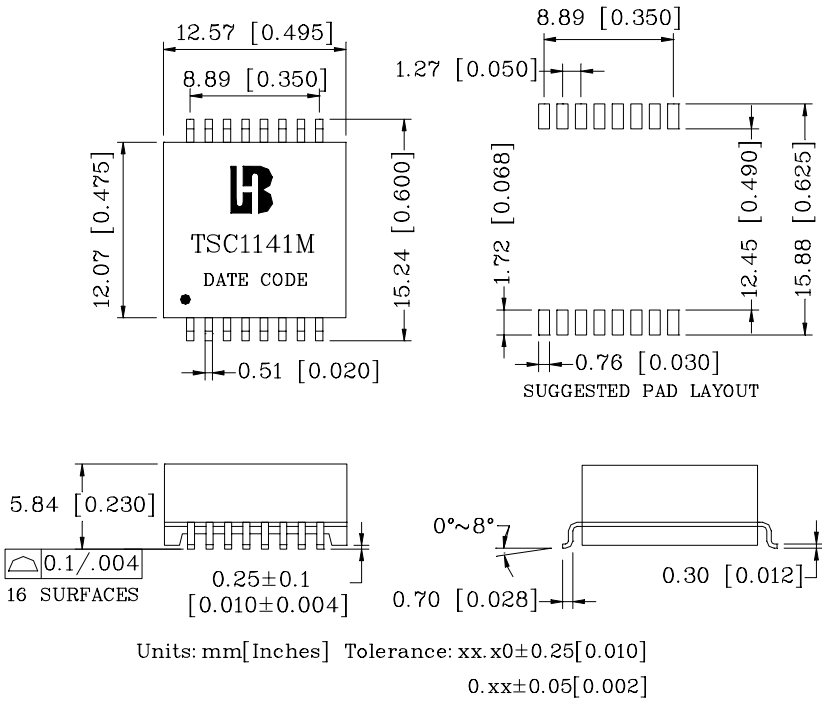

Units: mm[Inches] Tolerance: xx.x0±0.25[0.010]
0.xx±0.05[0.002]