TS9005

600mA CMOS LDO
with Enable Function

SOT-25



Pin Definition:

1. Input
2. Ground
3. Enable
4. Bypass
5. Output

General Description

The TS9005 is a low dropout, positive linear regulator with very low quiescent. It can supply 600mA output current with low dropout about 350mV. The BP pin with a 10nF bypass capacitor can help reduce the output noise level. The characteristics of low dropout voltage and less quiescent current make it good for some critical current application, for example, some battery powered devices. The typical quiescent current is approximately 50μA. In the shutdown mode, the maximum supply current is less than 1uA. The TS9005 regulator is able to operate with output capacitors as small as 1uF for stability.

Features

- Input voltage range: 2.5V~6V
- V_{DROP} typically 350mV@ Io=600mA (Vout≥2.8V)
- Output current up to 600mA guaranteed
- Current limit and thermal shutdown protection
- Low quiescent current at 50uA (typ.)
- Needs only 1uF capacitor for stability
- Maximum supply current in shutdown mode <1uA

Ordering Information

Part No.	Package	Packing
TS9005**x**CX5 RF	SOT-25	3Kpcs / 7” Reel

Note: Where **x** denotes voltage option, available are
D=1.8V
S=3.3V

Applications

- Instrumentation
- Wireless device
- Battery powered equipment
- Portable Devices

Absolute Maximum Rating

Parameter	Symbol	Limit	Unit
Input Supply Voltage	V_{IN}	GND -0.3 ~ +7	V
Output Voltage	V_{OUT}	GND -0.3 ~ V_{IN} +7	V
Enable Input Voltage	V_{EN}	GND -0.3 ~ GND +7	V
Feedback Voltage	V_{FB}	GND -0.3 ~ GND +7	V
Power Dissipation	P_D	300	mW
Thermal Resistance – Junction to Case	Θ_{JC}	25	°C/W
Thermal Resistance – Junction to Ambient	Θ_{JA}	120	°C/W
Operating Temperature Range	T_{OPR}	-40 ~ +85	°C
Junction Temperature Range	T_J	-40 ~ +125	°C
Storage Temperature Range	T_{STG}	-65 ~ +150	°C

Notes: Θ_{JA} is measured with the PCB copper area of approximately 1 in^2(multi-layer). That need connect to GND pin.

Electrical Characteristics (Ta = 25°C, unless otherwise noted)

Parameter	Symbol	Test Condition		Min	Typ	Max	Units
Input Voltage	V_{IN}	(Note 1)		2.5	--	5.5	V
Output Voltage Accuracy	ΔV_{OUT}	I_{OUT} =1mA		-2	--	+2	%
Dropout Voltage	V_{DROP}	I_O =600mA, V_O =$V_{O(NOM)}$ -2%	1.5V ≤ V_{OUT} ≤ 2V	--	1000	1200	mV
			2.8V ≤ V_{OUT} ≤ 5V	--	350	500	
Current Limit	I_{LIMIT}	R_{LOAD}=1Ω		700	--	--	mA
Short Circuit Current	I_{SHORT}	V_{OUT} <0.375 x V_{OUT}		--	300	--	mA
Line Regulation	REG_{LINE}	I_{OUT} =1mA , V_{IN}= V_{OUT} +1V ~ 5V		--	0.2	0.5	%
Load Regulation	REG_{LOAD}	I_{OUT} =10~600mA		--	0.5	1	%
Power Supply Rejection	PSRR	C_{IN}=1uF, C_{OUT}=1uF, I_{OUT}=10mA	f=120Hz.	--	65	--	dB
			f=1kHz.	--	55	--	
Quiescent Current	I_Q	I_{OUT} 0mA		--	50	80	uA
Shutdown Current	I_{SD}	V_{IN}= 2.8V~5V, V_{EN} =0V		--	--	1	uA
Enable Pin Current	I_{ENH}	V_{EH} =V_{IN}		--	--	0.1	uA
	I_{ENL}	V_{IN} =3.6V, V_{EN} =0V				1	
EN Input Threshold	V_{ENH}			1.5	--	--	V
	V_{ENL}			--	--	0.4	V
Over Temp. Shutdown	OTS			--	140	--	°C
Over Temp. Hysterisis	OTH			--	30	--	°C

Note1: $V_{IN(MIN)}$=V_{OUT}+$V_{DROPOUT}$
Note2: The is $V_{DROPOUT}$ defined as V_{IN}-V_{OUT}, which is measured when V_{OUT} drop about 100mV
Note3: Regulation is measured at constant junction temperature by using pulsed testing with a low ON tim

Block Diagram

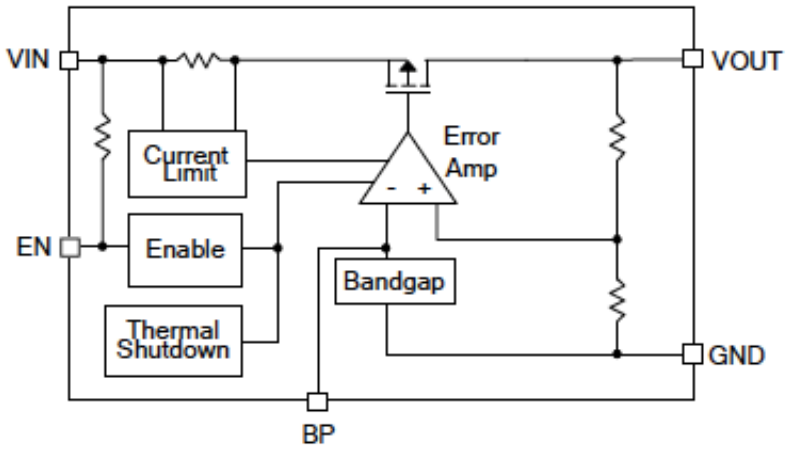

Typical Application Circuit

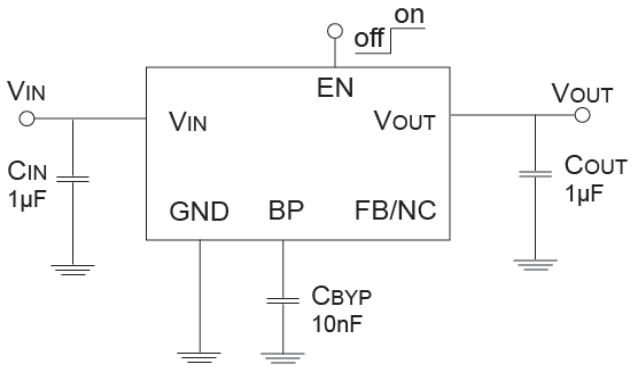

Application Information

TS9005 is specifically designed for portable applications requiring minimum board space and smallest components. It can provide 600mA output current at dropout voltage about 600mV. Beside, current limit and thermal shutdown features provide protection against any combination of overload or ambient temperature that could exceed junction temperature.

Capacitor Selection

TS9005 is designed to be stable with a wide range of output capacitors. The ESR of the output capacitor affects stability. Larger output capacitor value can decrease peak deviations and to improve transition response for larger current changes. So the ESR of output capacitor is very important because it generates a zero to provide phase lead for loop stability. There is no requirement for the ESR on the input capacitor, but voltage and temperature coefficient have to be considered for device application environments.

The capacitor types (aluminum, ceramic and tantalum) have difference characterizations such as temperature and voltage coefficients. All ceramic capacitors are produces with a variety of dielectrics, each with different behavior across temperature and applications. Common dielectric use are X5R, X7R and Y5V. It is recommended to use 1uF X5R or X7R dielectric ceramic capacitor with 30mΩ~50mΩ ESR range between device outputs to ground for transient stability.

Current Limit and Thermal Shutdown Protection

In order to prevent overloading or thermal condition from damaging the device, TS9005 regulator has internal thermal and current limiting functions designed to protect the device. It will rapidly shut off PMOS pass element during overloading or over temperature condition.

SOT-25 Mechanical Drawing

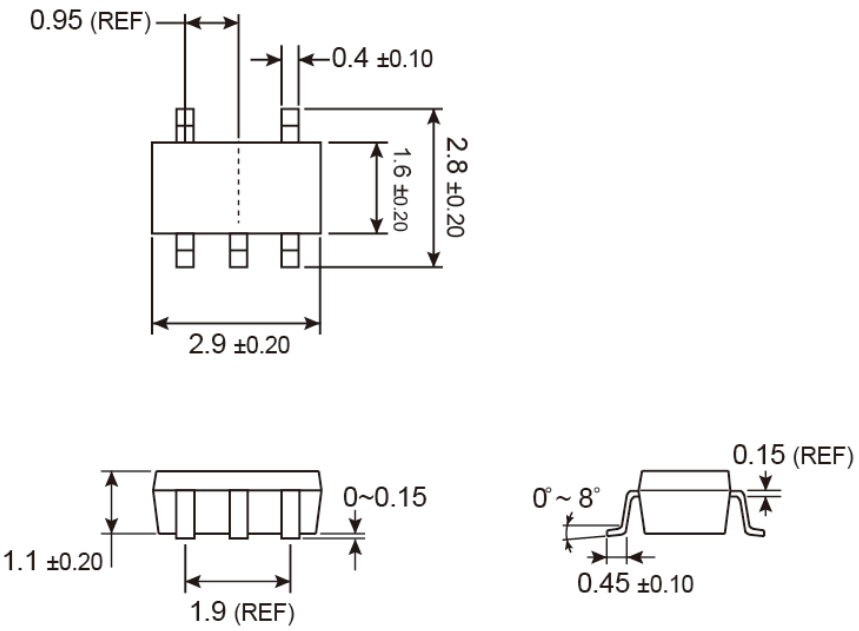

Unit: Millimeters

Marking Diagram

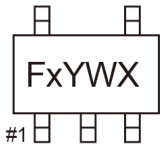

F = Device Code
x = Voltage Code
k=1.8V, **s**=3.3V
Y = Year Code (3=2013, 4=2014……)
W = Week Code
WW: 01~26 (A~Z)
27~52 (a~z)
X = Internal ID Code

Notice

Specifications of the products displayed herein are subject to change without notice. TSC or anyone on its behalf, assumes no responsibility or liability for any errors or inaccuracies.

Information contained herein is intended to provide a product description only. No license, express or implied, to any intellectual property rights is granted by this document. Except as provided in TSC's terms and conditions of sale for such products, TSC assumes no liability whatsoever, and disclaims any express or implied warranty, relating to sale and/or use of TSC products including liability or warranties relating to fitness for a particular purpose, merchantability, or infringement of any patent, copyright, or other intellectual property right.

The products shown herein are not designed for use in medical, life-saving, or life-sustaining applications. Customers using or selling these products for use in such applications do so at their own risk and agree to fully indemnify TSC for any damages resulting from such improper use or sale.