5-CHANNEL DIFFERENTIAL 10:20 MULTIPLEXER SWITCH FOR DVI/HDMI APPLICATIONS

FEATURES

- **Compatible With HDMI v1.2a (Type A) DVI 1.0 High-Speed Digital Interface**
  - **Wide Bandwidth to support throughput of over 1.65 Gbps (Data rate 1.9 Gbps Typ)**
  - **Serial Data Stream at 10× Pixel Clock Rate**
  - **Supports All Video Formats up to 1080p and SXGA (1280 × 1024 at 75 Hz)**
  - **Total Raw Capacity 4.95 Gbps (Single Link)**
  - **HDCP Compatible**
- **Compatible with SXGA Video Display formats up to 1080P (1280 × 1024 at 75Hz)**
- **Low Crosstalk (X_{TALK} = –37 dB Typ)**
- **Low Bit-to-Bit Skew ($t_{sk(o)}$ = 0.1 ns Max)**
- **Low and Flat ON-State Resistance (r_{on} = 4 Ω Typ, $r_{on(flat)}$ = 0.5 Ω Typ)**
- **Low Input/Output Capacitance (C_{ON} = 8 pF Typ)**
- **Rail-to-Rail Switching on Data I/O Ports (0 to 3.6 V)**
- **V_{CC} Operating Range From 3 V to 3.6 V**
- **Latch-Up Performance Exceeds 100 mA Per JESD 78, Class II**
- **ESD Performance Tested**
  - **14-kV Human-Body Model Per JESD 22 (A114-B, Class II)**
  - **7.5-kV Contact Discharge Per IEC 61000-4-2**

APPLICATIONS

- **DVI/HDMI Signal Switching**
- **Differential DVI, HDMI Signal Multiplexing for Audio/Video Receivers and High-Definition Televisions (HDTVs)**

DESCRIPTION/ORDERING INFORMATION

The TS3DV520E is a 20-bit to 10-bit multiplexer/demultiplexer digital video switch with a single select (SEL) input. SEL controls the data path of the multiplexer/demultiplexer. The device provides five differential channels for digital video signal switching.

This device provides low and flat ON-state resistance (r_{on}) and excellent ON-state resistance match. Low input/output capacitance, high bandwidth, low skew, and low crosstalk among channels make this device suitable for various digital video applications, such as DVI and HDMI.

Voltage on the SEL pin should be less or equal to V_{CC}, even in the power-down mode (V_{CC} = 0 V).

ORDERING INFORMATION

T_A	PACKAGE(1)(2)		ORDERABLE PART NUMBER	TOP-SIDE MARKING
–40°C to 85°C	TQFN – RHU	Reel of 2000	TS3DV520ERHURG4	SD520E
	QFN – RUA	Reel of 2000	TS3DV520ERUAR	SD520E

(1) Package drawings, thermal data, and symbolization are available at www.ti.com/packaging.
(2) For the most current package and ordering information, see the Package Option Addendum at the end of this document, or see the TI website at www.ti.com.

Please be aware that an important notice concerning availability, standard warranty, and use in critical applications of Texas Instruments semiconductor products and disclaimers thereto appears at the end of this data sheet.

PRODUCTION DATA information is current as of publication date. Products conform to specifications per the terms of the Texas Instruments standard warranty. Production processing does not necessarily include testing of all parameters.

Copyright © 2007–2009, Texas Instruments Incorporated

RHU PACKAGE
(TOP VIEW)

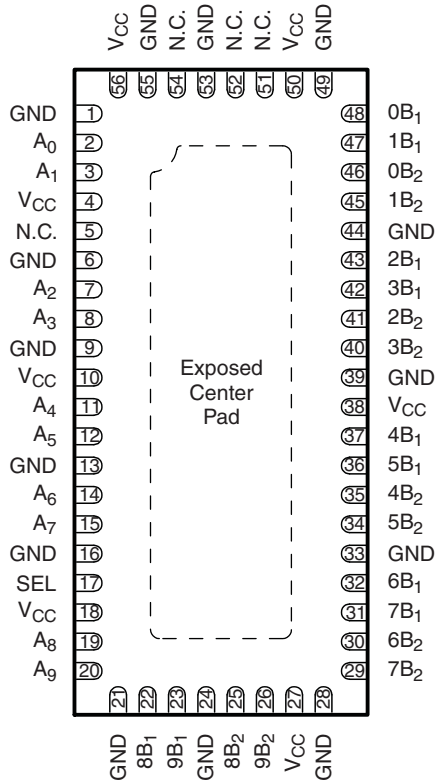

The exposed center pad, if used, must be connected to GND or left electrically open.

N.C. – No internal connection

RUA PACKAGE
(TOP VIEW)

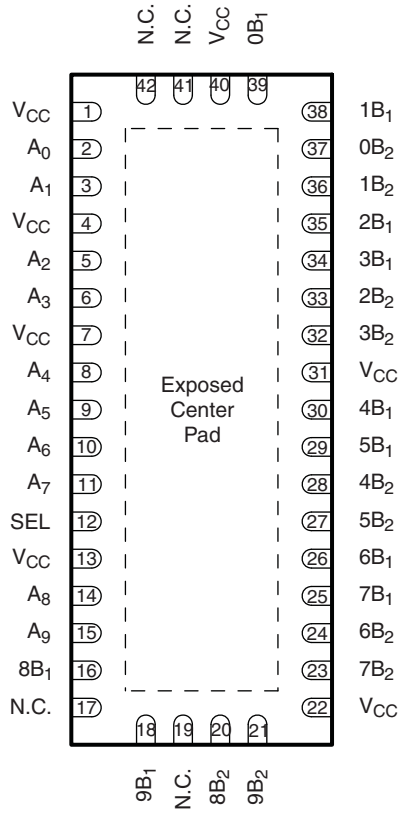

The exposed center pad must be connected to GND for proper device operation.

FUNCTION TABLE

INPUT SEL	INPUT/OUTPUT An	FUNCTION	
L	nB_1	$A_n = nB_1$	nB_2 high-impedance mode
H	nB_2	$A_n = nB_2$	nB_1 high-impedance mode

PIN DESCRIPTION

NAME	DESCRIPTION
A_n	Data I/O
nB_m	Data I/O
SEL	Select input

Copyright © 2007–2009, Texas Instruments Incorporated

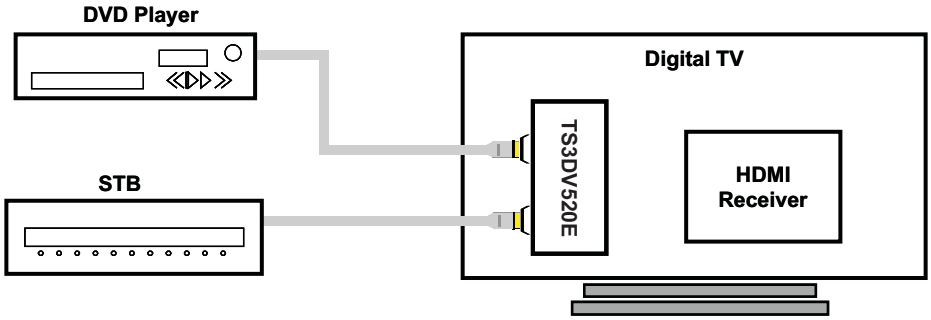
DVD Player
STB
Digital TV
TS3DV520E
HDMI
Receiver

LOGIC DIAGRAM (POSITIVE LOGIC)

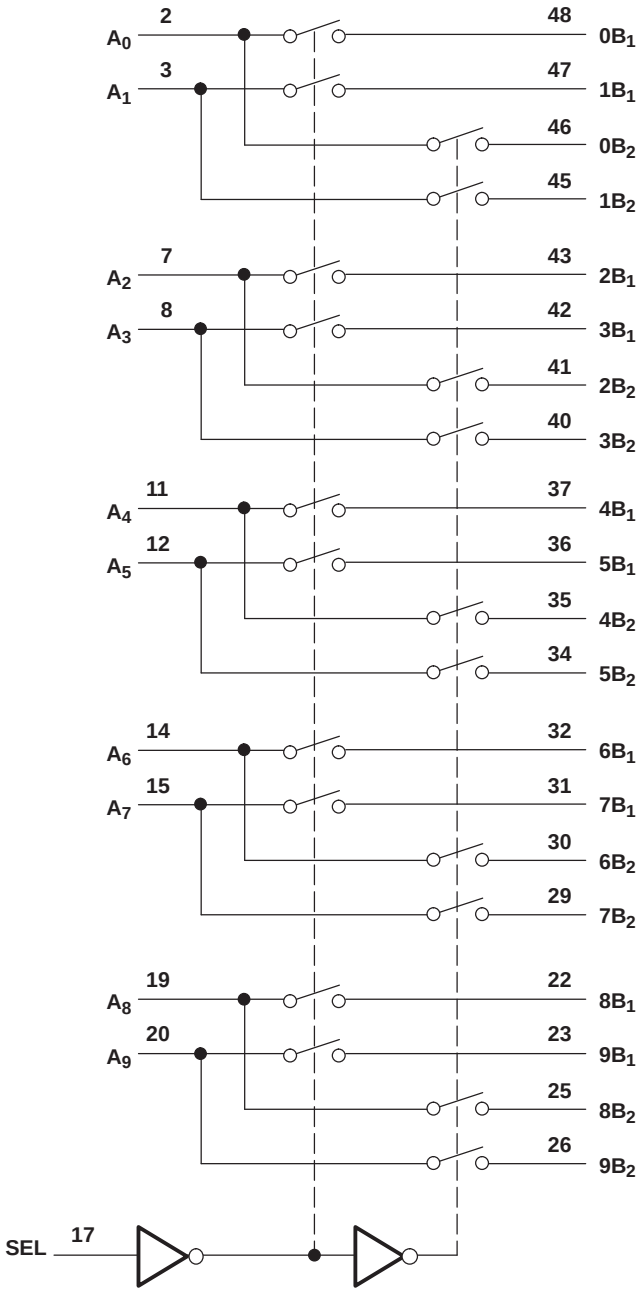

Copyright © 2007–2009, Texas Instruments Incorporated

ABSOLUTE MAXIMUM RATINGS(1)

over operating free-air temperature range (unless otherwise noted)

			MIN	MAX	UNIT
V_{CC}	Supply voltage range		–0.5	4.6	V
V_{IN}	Control input voltage range(2)(3)		–0.5	V_{CC} + 0.5	V
$V_{I/O}$	Switch I/O voltage range(2)(3)(4)		–0.5	V_{CC} + 0.5	V
I_{IK}	Control input clamp current	V_{IN} < 0 or V_{IN} > V_{CC}	–50	50	mA
$I_{I/OK}$	I/O port clamp current	$V_{I/O}$ < 0 or $V_{I/O}$ > V_{CC}	–50	50	mA
$I_{I/O}$	ON-state switch current(5)			±128	mA
	Continuous current through V_{CC} or GND			±100	mA
θ_{JA}	Package thermal impedance(6)	RHU package		31.8	°C/W
		RUA package		51.2	
T_{stg}	Storage temperature range		–65	150	°C

(1) Stresses beyond those listed under "absolute maximum ratings" may cause permanent damage to the device. These are stress ratings only, and functional operation of the device at these or any other conditions beyond those indicated under "recommended operating conditions" is not implied. Exposure to absolute-maximum-rated conditions for extended periods may affect device reliability.
(2) All voltages are with respect to ground, unless otherwise specified.
(3) The input and output voltage ratings may be exceeded if the input and output clamp-current ratings are observed.
(4) V_I and V_O are used to denote specific conditions for $V_{I/O}$.
(5) I_I and I_O are used to denote specific conditions for $I_{I/O}$.
(6) The package thermal impedance is calculated in accordance with JESD 51-7.

RECOMMENDED OPERATING CONDITIONS(1)

		MIN	MAX	UNIT
V_{CC}	Supply voltage	3	3.6	V
V_{IH}	High-level control input voltage (SEL)	2	V_{CC}	V
V_{IL}	Low-level control input voltage (SEL)	0	0.8	V
$V_{I/O}$	Input/output voltage	0	V_{CC}	V
T_A	Operating free-air temperature	–40	85	°C

(1) All unused control inputs of the device must be held at V_{CC} or GND to ensure proper device operation. Refer to the TI application report, *Implications of Slow or Floating CMOS Inputs*, literature number SCBA004.

Copyright © 2007–2009, Texas Instruments Incorporated

ELECTRICAL CHARACTERISTICS(1)

for high-frequency switching over recommended operating free-air temperature range, V_{CC} = 3.3 V ± 0.3 V (unless otherwise noted)

PARAMETER		TEST CONDITIONS				MIN	TYP(2)	MAX	UNIT
V_{IK}	SEL	V_{CC} = 3.6 V,	I_{IN} = –18 mA				–0.7	–1.2	V
I_{IH}	SEL	V_{CC} = 3.6 V,	V_{IN} = V_{CC}					±1	µA
I_{IL}	SEL	V_{CC} = 3.6 V,	V_{IN} = GND					±1	µA
I_{CC}		V_{CC} = 3.6 V,	$I_{I/O}$ = 0,	Switch ON or OFF			250	600	µA
C_{IN}	SEL	f = 1 MHz,	V_{IN} = 0				2	2.5	pF
C_{OFF}	B port	V_I = 0,	f = 1 MHz,	Outputs open,	Switch OFF		3	4	pF
C_{ON}		V_I = 0,	f = 1 MHz,	Outputs open,	Switch ON		9	9.8	pF
r_{on}		V_{CC} = 3 V,	1.5 V ≤ V_I ≤ V_{CC},	I_O = –40 mA			4	8	Ω
$r_{on(flat)}$(3)		V_{CC} = 3 V,	V_I = 1.5 V and V_{CC},	I_O = –40 mA			0.7		Ω
Δr_{on}(4)		V_{CC} = 3 V,	1.5 V ≤ V_I ≤ V_{CC},	I_O = –40 mA			0.2	1.2	Ω

(1) V_I, V_O, I_I, and I_O refer to I/O pins. V_{IN} refers to the control inputs.
(2) All typical values are at V_{CC} = 3.3 V (unless otherwise noted), T_A = 25°C.
(3) $r_{on(flat)}$ is the difference of r_{on} in a given channel at specified voltages.
(4) Δr_{on} is the difference of r_{on} from center (A_4, A_5) ports to any other port.

SWITCHING CHARACTERISTICS

over recommended operating free-air temperature range, V_{CC} = 3.3 V ± 0.3 V, R_L = 200 Ω, C_L = 10 pF (unless otherwise noted) (see Figure 5 and Figure 6)

PARAMETER	FROM (INPUT)	TO (OUTPUT)	MIN	TYP(1)	MAX	UNIT
t_{pd}(2)	A or B	B or A		0.25		ns
t_{PZH}, t_{PZL}	SEL	A or B	0.5		15	ns
t_{PHZ}, t_{PLZ}	SEL	A or B	0.5		9	ns
$t_{sk(o)}$(3)	A or B	B or A		0.05	0.1	ns
$t_{sk(p)}$(4)				0.05	0.1	ns

(1) All typical values are at V_{CC} = 3.3 V (unless otherwise noted), T_A = 25°C.
(2) The propagation delay is the calculated RC time constant of the typical ON-state resistance of the switch and the specified load capacitance when driven by an ideal voltage source (zero output impedance).
(3) Output skew between center port (A_4 to A_5) to any other port
(4) Skew between opposite transitions of the same output in a given device $|t_{PHL} - t_{PLH}|$

DYNAMIC CHARACTERISTICS

over recommended operating free-air temperature range, V_{CC} = 3.3 V ± 0.3 V (unless otherwise noted)

PARAMETER	TEST CONDITIONS			TYP(1)	UNIT
X_{TALK}	R_L = 100 Ω,	f = 250 MHz,	See Figure 8	–37	dB
O_{IRR}	R_L = 100 Ω,	f = 250 MHz,	See Figure 9	–37	dB
BW	R_L = 100 Ω,	See Figure 7		950	MHz

(1) All typical values are at V_{CC} = 3.3 V (unless otherwise noted), T_A = 25°C.

Copyright © 2007–2009, Texas Instruments Incorporated

OPERATING CHARACTERISTICS

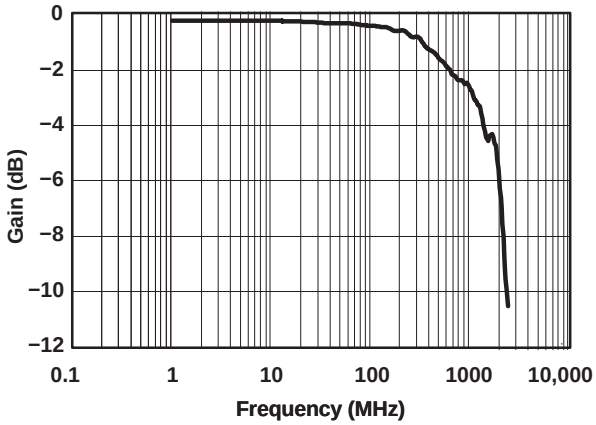

Figure 1. Gain/Phase vs Frequency

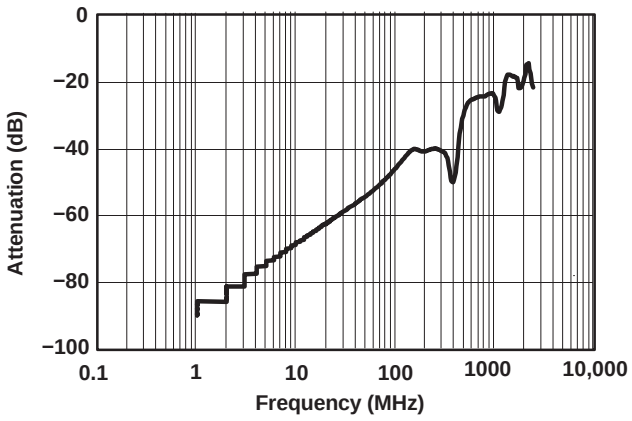

Figure 2. OFF Isolation vs Frequency

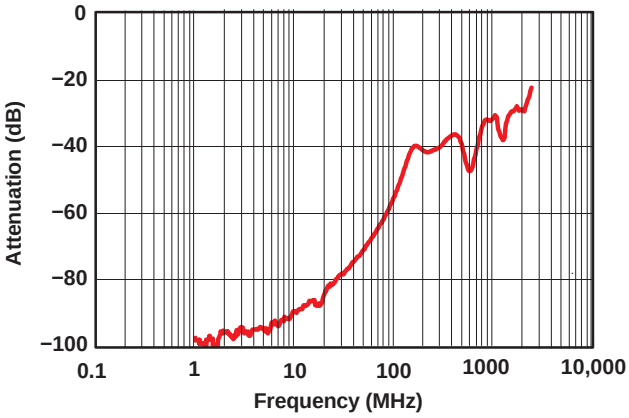

Figure 3. Crosstalk vs Frequency

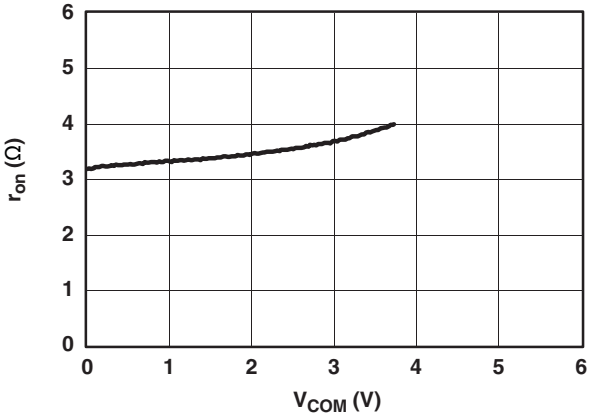

Figure 4. r_{on} vs V_{COM} (V_{CC} = 3.6 V

APPLICATION INFORMATION

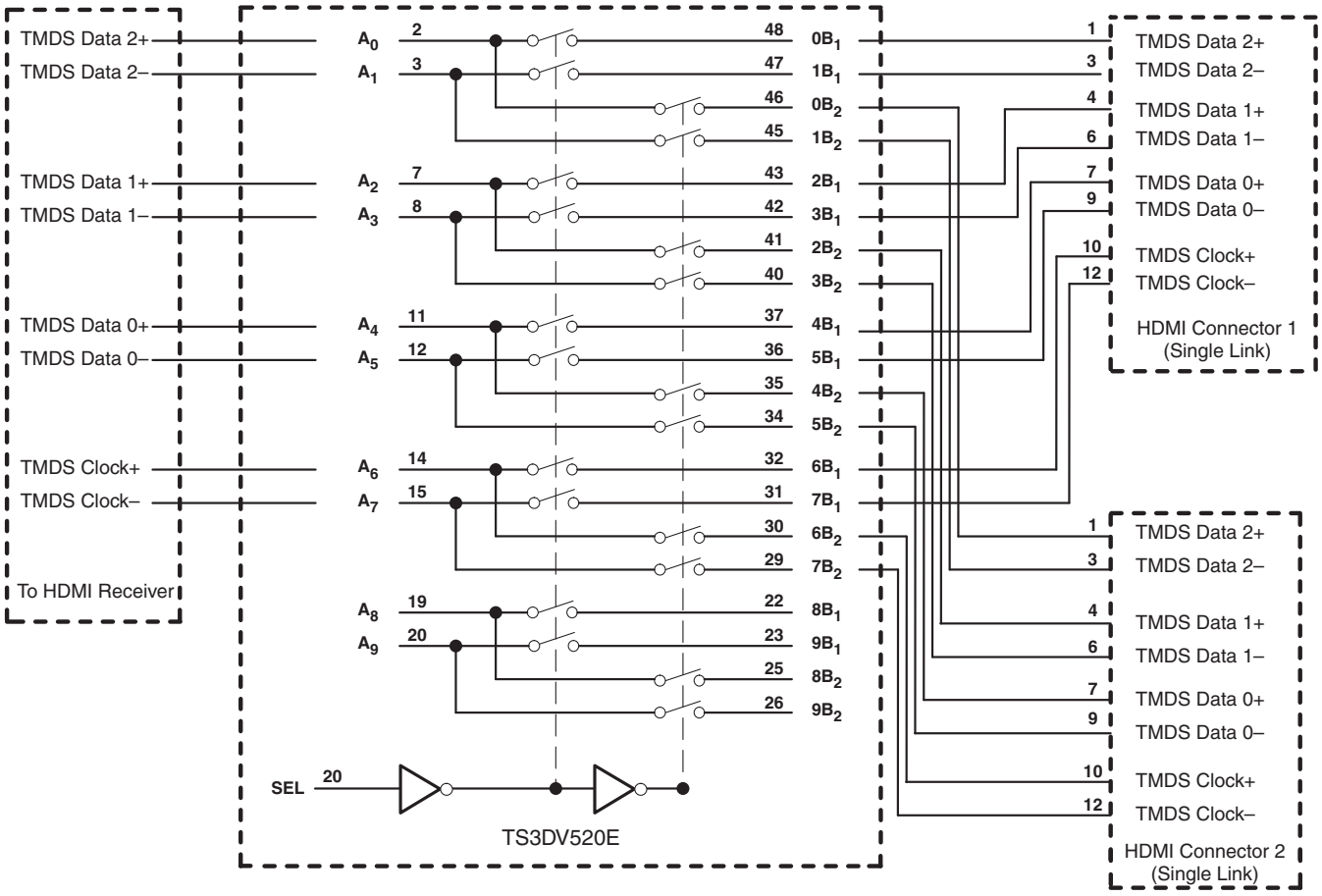

Typical HDMI Connector

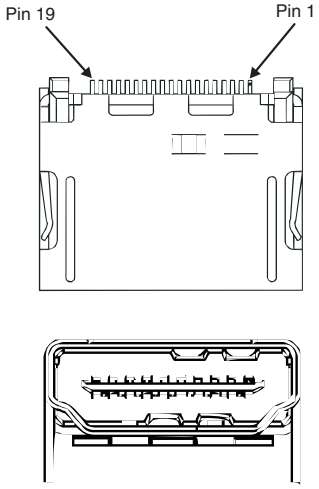

Pin	Signal Assignment
1	TMDS Data 2+
2	TMDS Data 2 Shield
3	TMDS Data 2–
4	TMDS Data 1+
5	TMDS Data 1 Shield
6	TMDS Data 1–
7	TMDS Data 0+
8	TMDS Data 0 Shield
9	TMDS Data 0–
10	TMDS Clock+
11	TMDS Clock Shield
12	TMDS Clock–
13	CEC
14	Reserved (N.C. on device)
15	SCL
16	SDA
17	DDC/CEC Ground
18	5 V Power
19	Hot Plug Detect

The TS3DV520E can be used to switch between two digital video ports.

Copyright © 2007–2009, Texas Instruments Incorporated

PARAMETER MEASUREMENT INFORMATION
(Enable and Disable Times)

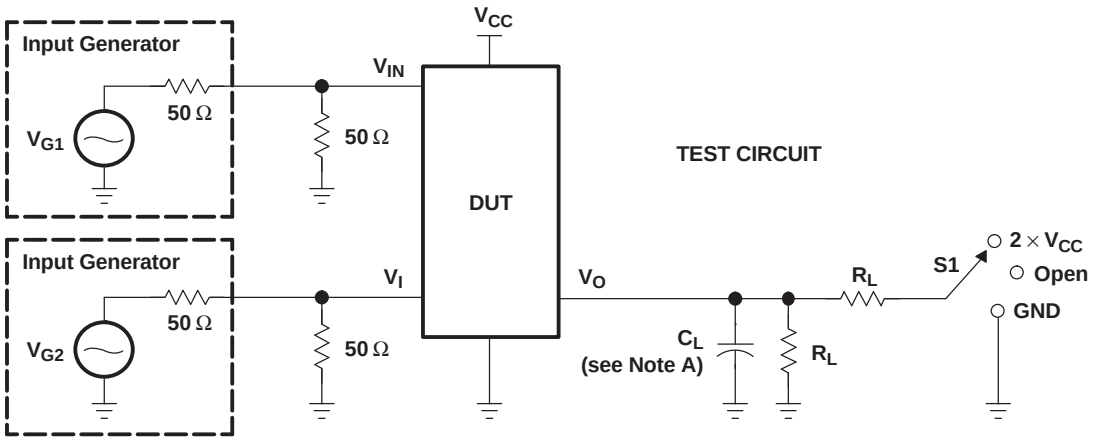

TEST	V_{CC}	S1	R_L	V_I	C_L	V_Δ
t_{PLZ}/t_{PZL}	3.3 V ± 0.3 V	2 × V_{CC}	200 Ω	GND	10 pF	0.3 V
t_{PHZ}/t_{PZH}	3.3 V ± 0.3 V	GND	200 Ω	V_{CC}	10 pF	0.3 V

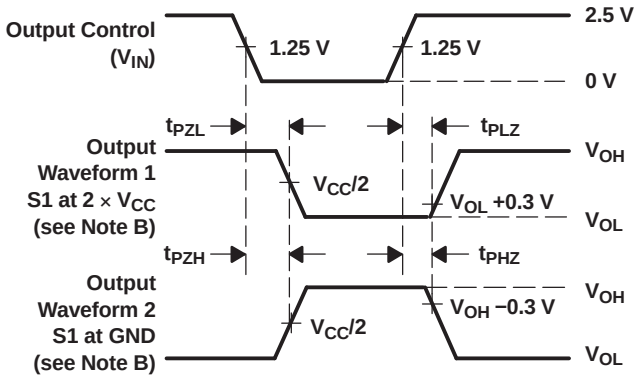

VOLTAGE WAVEFORMS
ENABLE AND DISABLE TIMES

NOTES: A. C_L includes probe and jig capacitance.
B. Waveform 1 is for an output with internal conditions such that the output is low, except when disabled by the output control. Waveform 2 is for an output with internal conditions such that the output is high, except when disabled by the output control.
C. All input pulses are supplied by generators having the following characteristics: PRR ≤ 10 MHz, Z_O = 50 Ω, t_r ≤ 2.5 ns, t_f ≤ 2.5 ns.
D. The outputs are measured one at a time, with one transition per measurement.
E. t_{PLZ} and t_{PHZ} are the same as t_{dis}.
F. t_{PZL} and t_{PZH} are the same as t_{en}.

Figure 5. Test Circuit and Voltage Waveforms

Copyright © 2007–2009, Texas Instruments Incorporated

PARAMETER MEASUREMENT INFORMATION (Skew)

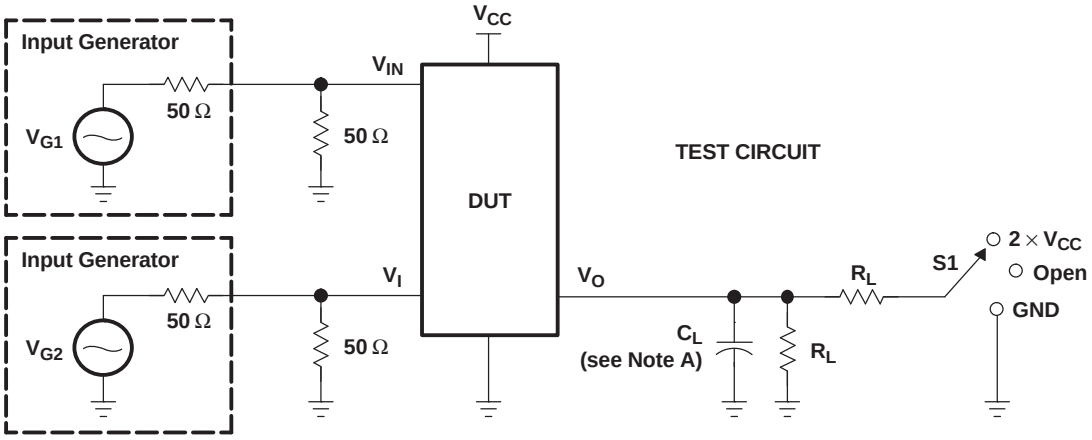

TEST	V_{CC}	S1	R_L	V_I	C_L	V_Δ
$t_{sk(o)}$	3.3 V ± 0.3 V	Open	200 Ω	V_{CC} or GND	10 pF	
$t_{sk(p)}$	3.3 V ± 0.3 V	Open	200 Ω	V_{CC} or GND	10 pF	

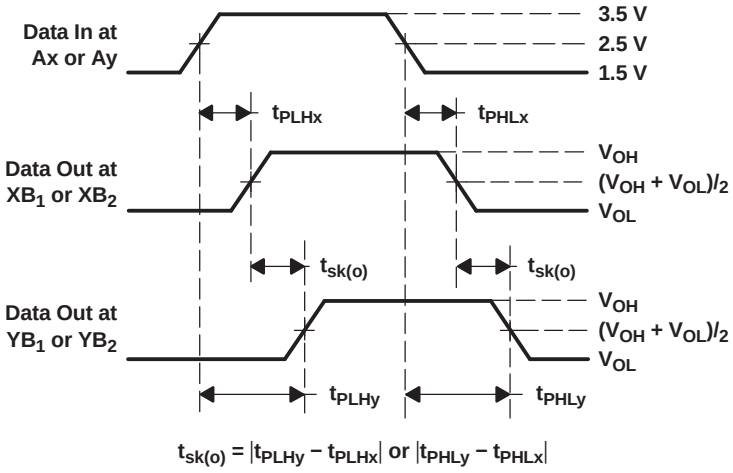

VOLTAGE WAVEFORMS
OUTPUT SKEW ($t_{sk(o)}$)

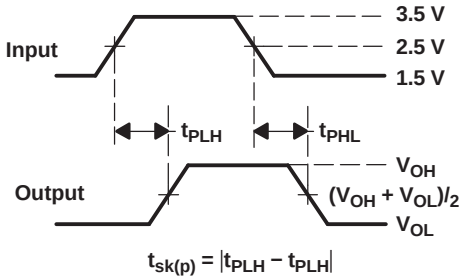

VOLTAGE WAVEFORMS
PULSE SKEW ($t_{sk(p)}$)

NOTES: A. C_L includes probe and jig capacitance.
B. Waveform 1 is for an output with internal conditions such that the output is low, except when disabled by the output control. Waveform 2 is for an output with internal conditions such that the output is high, except when disabled by the output control.
C. All input pulses are supplied by generators having the following characteristics: PRR ≤ 10 MHz, Z_O = 50 Ω, t_r ≤ 2.5 ns, t_f ≤ 2.5 ns.
D. The outputs are measured one at a time, with one transition per measurement.

Figure 6. Test Circuit and Voltage Waveforms

Copyright © 2007–2009, Texas Instruments Incorporated

PARAMETER MEASUREMENT INFORMATION

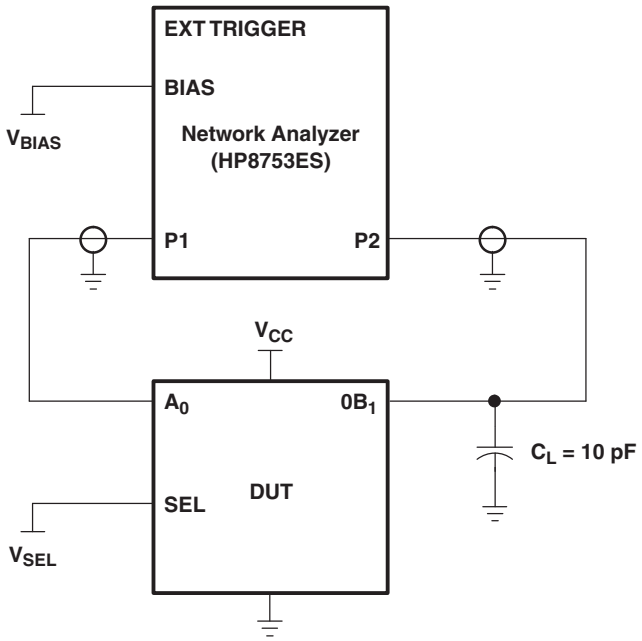

Figure 7. Test Circuit for Frequency Response (BW)

Frequency response is measured at the output of the ON channel. For example, when V_{SEL} = 0 and A_0 is the input, the output is measured at $0B_1$. All unused analog I/O ports are left open.

HP8753ES setup

Average = 4

RBW = 3 kHz

V_{BIAS} = 0.35 V

ST = 2 s

P1 = 0 dBM

Copyright © 2007–2009, Texas Instruments Incorporated

PARAMETER MEASUREMENT INFORMATION

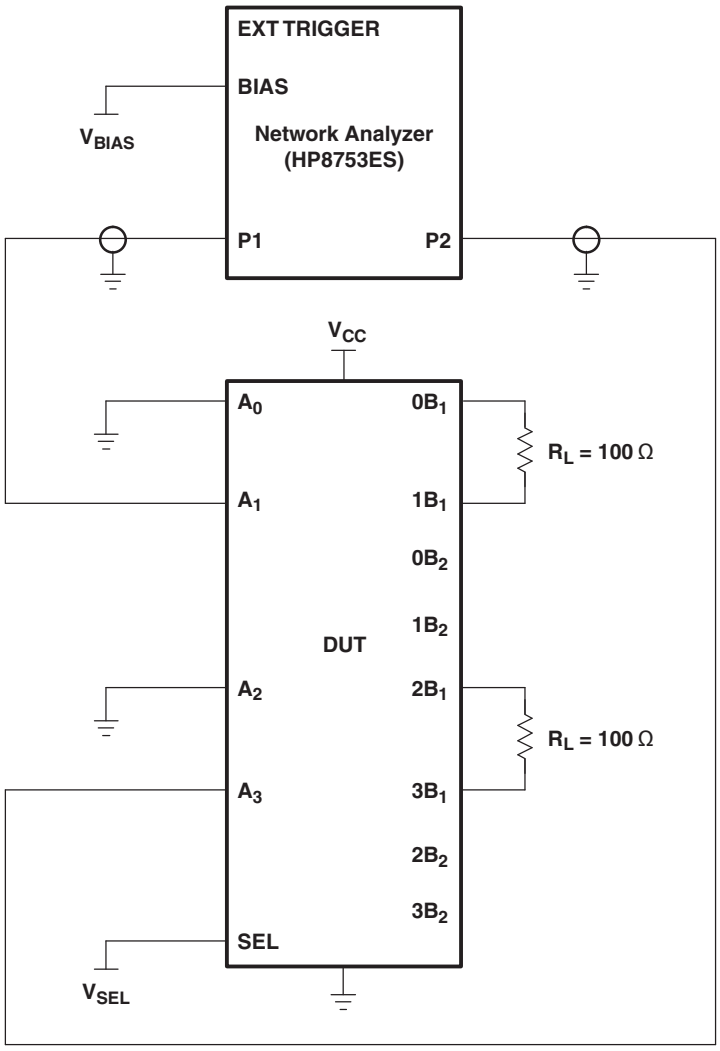

A. A 50-Ω termination resistor is needed to match the loading of the network analyzer.

Figure 8. Test Circuit for Crosstalk (X_{TALK})

Crosstalk is measured at the output of the nonadjacent ON channel. For example, when V_{SEL} = 0 and A_0 is the input, the output is measured at $1B_1$. All unused analog input (A) ports are connected to GND, and output (B) ports are connected to GND through 50-Ω pulldown resistors.

HP8753ES setup

Average = 4

RBW = 3 kHz

V_{BIAS} = 0.35 V

ST = 2 s

P1 = 0 dBM

Copyright © 2007–2009, Texas Instruments Incorporated

PARAMETER MEASUREMENT INFORMATION

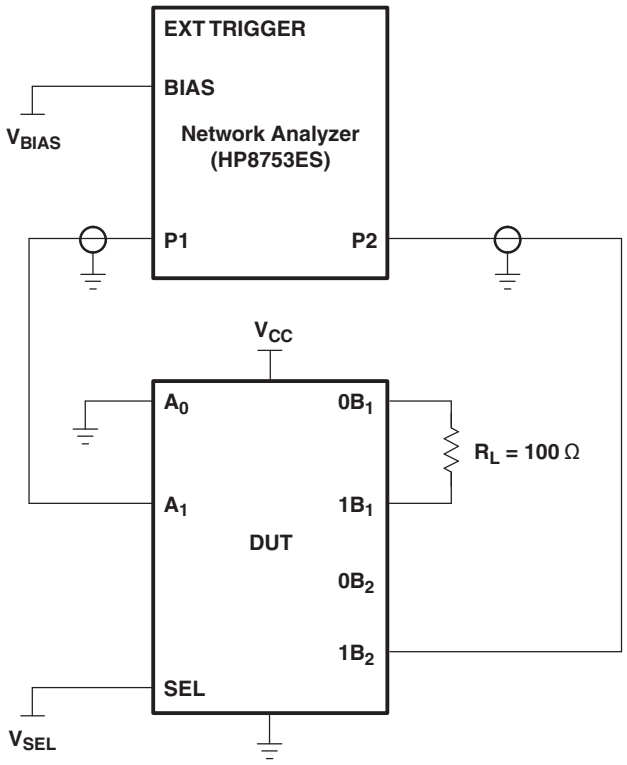

A. A 50-Ω termination resistor is needed to match the loading of the network analyzer.

Figure 9. Test Circuit for OFF Isolation (O_{IRR})

OFF isolation is measured at the output of the OFF channel. For example, when V_{SEL} = V_{CC} and A_0 is the input, the output is measured at $0B_2$. All unused analog input (A) ports are left open, and output (B) ports are connected to GND through 50-Ω pulldown resistors.

HP8753ES setup

Average = 4

RBW = 3 kHz

V_{BIAS} = 0.35 V

ST = 2

P1 = 0 dBM

Copyright © 2007–2009, Texas Instruments Incorporated

PACKAGING INFORMATION

Orderable Device	Status (1)	Package Type	Package Drawing	Pins	Package Qty	Eco Plan (2)	Lead/Ball Finish (6)	MSL Peak Temp (3)	Op Temp (°C)	Device Marking (4/5)	Samples
TS3DV520ERUAR	ACTIVE	WQFN	RUA	42	3000	Green (RoHS & no Sb/Br)	NIPDAUAG	Level-1-260C-UNLIM	-40 to 85	SD520E	Samples

(1) The marketing status values are defined as follows:
ACTIVE: Product device recommended for new designs.
LIFEBUY: TI has announced that the device will be discontinued, and a lifetime-buy period is in effect.
NRND: Not recommended for new designs. Device is in production to support existing customers, but TI does not recommend using this part in a new design.
PREVIEW: Device has been announced but is not in production. Samples may or may not be available.
OBSOLETE: TI has discontinued the production of the device.

(2) **RoHS:** TI defines "RoHS" to mean semiconductor products that are compliant with the current EU RoHS requirements for all 10 RoHS substances, including the requirement that RoHS substance do not exceed 0.1% by weight in homogeneous materials. Where designed to be soldered at high temperatures, "RoHS" products are suitable for use in specified lead-free processes. TI may reference these types of products as "Pb-Free".
RoHS Exempt: TI defines "RoHS Exempt" to mean products that contain lead but are compliant with EU RoHS pursuant to a specific EU RoHS exemption.
Green: TI defines "Green" to mean the content of Chlorine (Cl) and Bromine (Br) based flame retardants meet JS709B low halogen requirements of <=1000ppm threshold. Antimony trioxide based flame retardants must also meet the <=1000ppm threshold requirement.

(3) MSL, Peak Temp. - The Moisture Sensitivity Level rating according to the JEDEC industry standard classifications, and peak solder temperature.

(4) There may be additional marking, which relates to the logo, the lot trace code information, or the environmental category on the device.

(5) Multiple Device Markings will be inside parentheses. Only one Device Marking contained in parentheses and separated by a "~" will appear on a device. If a line is indented then it is a continuation of the previous line and the two combined represent the entire Device Marking for that device.

(6) Lead/Ball Finish - Orderable Devices may have multiple material finish options. Finish options are separated by a vertical ruled line. Lead/Ball Finish values may wrap to two lines if the finish value exceeds the maximum column width.

Important Information and Disclaimer: The information provided on this page represents TI's knowledge and belief as of the date that it is provided. TI bases its knowledge and belief on information provided by third parties, and makes no representation or warranty as to the accuracy of such information. Efforts are underway to better integrate information from third parties. TI has taken and continues to take reasonable steps to provide representative and accurate information but may not have conducted destructive testing or chemical analysis on incoming materials and chemicals. TI and TI suppliers consider certain information to be proprietary, and thus CAS numbers and other limited information may not be available for release.

In no event shall TI's liability arising out of such information exceed the total purchase price of the TI part(s) at issue in this document sold by TI to Customer on an annual basis.

TAPE AND REEL INFORMATION

REEL DIMENSIONS

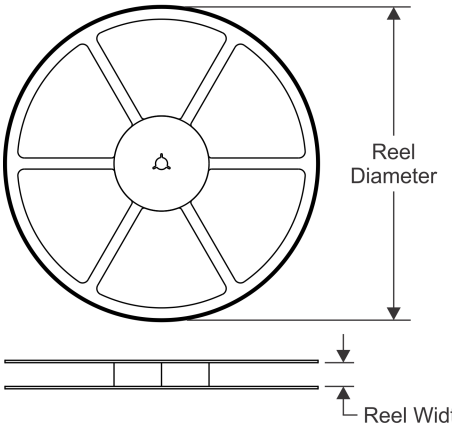

TAPE DIMENSIONS

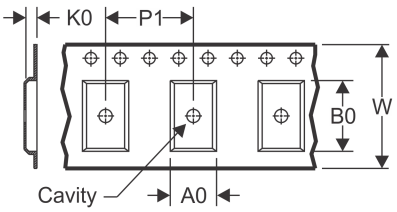

A0	Dimension designed to accommodate the component width
B0	Dimension designed to accommodate the component length
K0	Dimension designed to accommodate the component thickness
W	Overall width of the carrier tape
P1	Pitch between successive cavity centers

QUADRANT ASSIGNMENTS FOR PIN 1 ORIENTATION IN TAPE

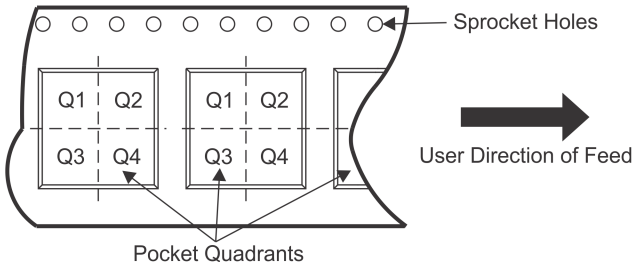

*All dimensions are nominal

Device	Package Type	Package Drawing	Pins	SPQ	Reel Diameter (mm)	Reel Width W1 (mm)	A0 (mm)	B0 (mm)	K0 (mm)	P1 (mm)	W (mm)	Pin1 Quadrant
TS3DV520ERUAR	WQFN	RUA	42	3000	330.0	24.4	3.9	9.4	1.0	8.0	24.0	Q1

TAPE AND REEL BOX DIMENSIONS

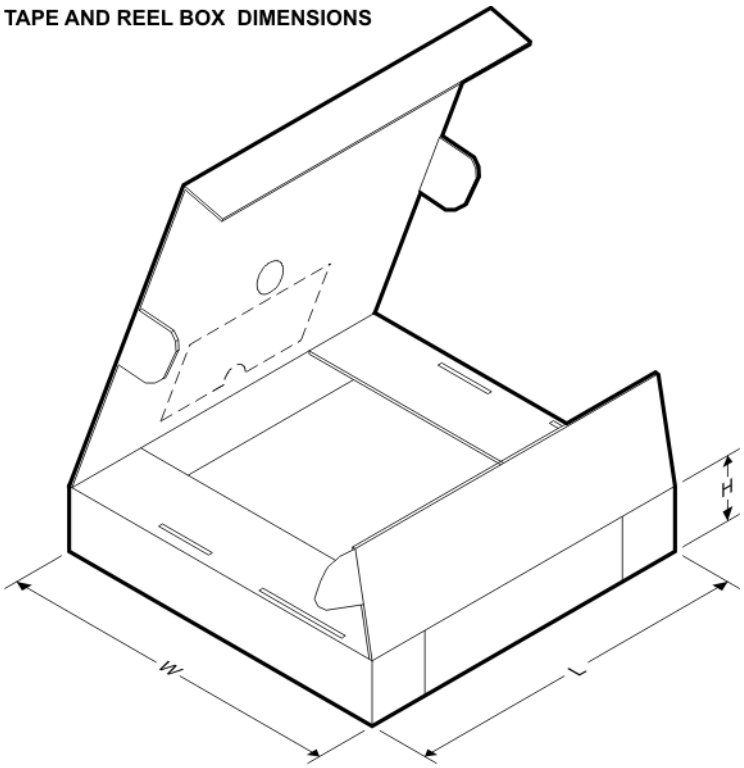

*All dimensions are nominal

Device	Package Type	Package Drawing	Pins	SPQ	Length (mm)	Width (mm)	Height (mm)
TS3DV520ERUAR	WQFN	RUA	42	3000	346.0	346.0	35.0

PACKAGE OUTLINE

RUA0042A

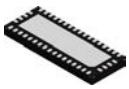

WQFN - 0.8 mm max height

PLASTIC QUAD FLATPACK - NO LEAD

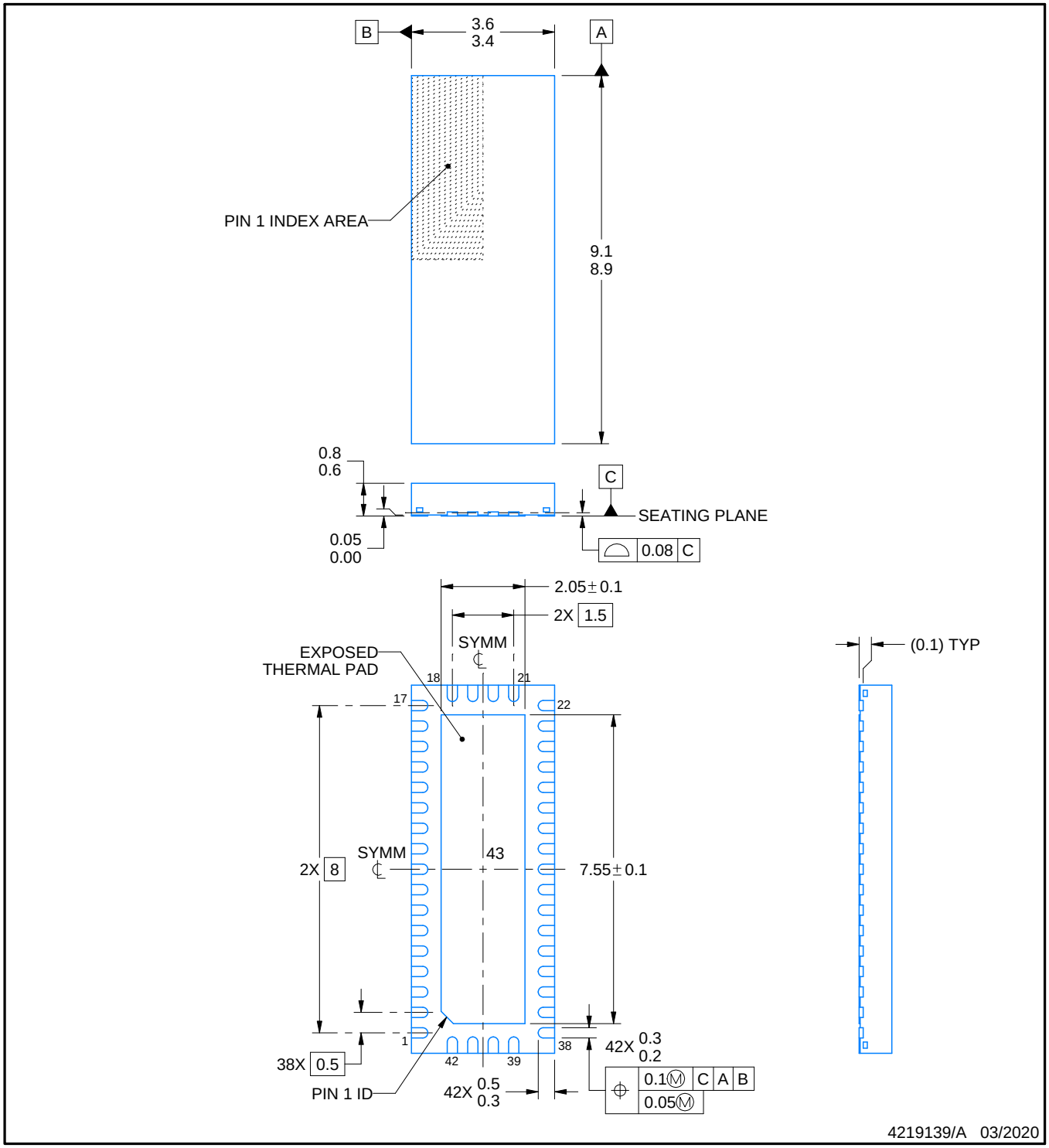

NOTES:

1. All linear dimensions are in millimeters. Any dimensions in parenthesis are for reference only. Dimensioning and tolerancing per ASME Y14.5M.
2. This drawing is subject to change without notice.
3. The package thermal pad must be soldered to the printed circuit board for thermal and mechanical performance.

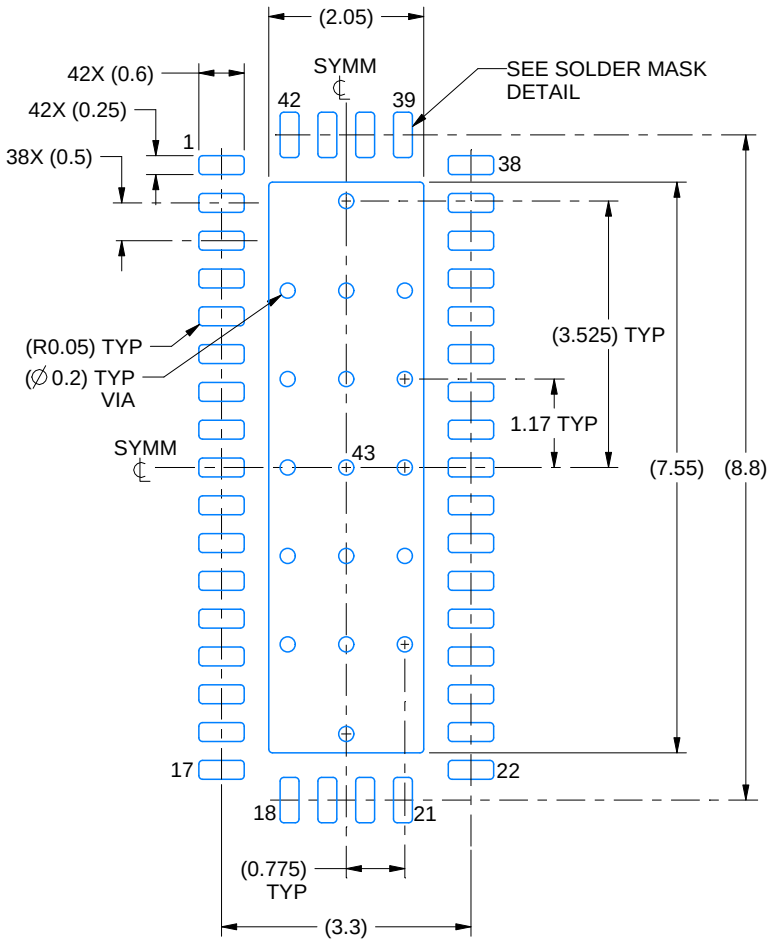

LAND PATTERN EXAMPLE
EXPOSED METAL SHOWN
SCALE: 10X

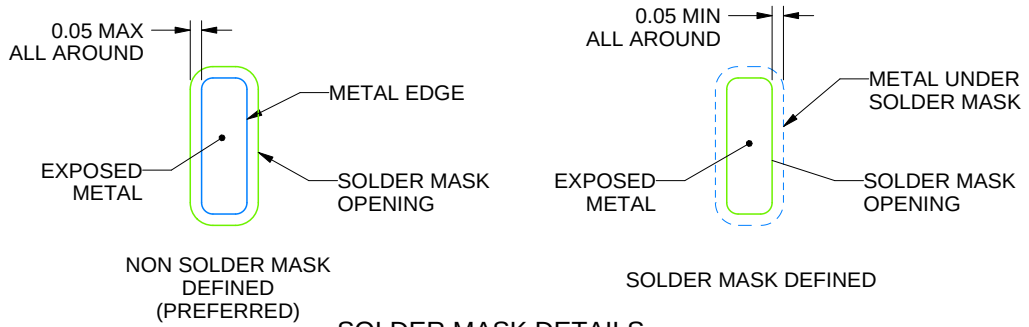

SOLDER MASK DETAILS

4219139/A 03/2020

NOTES: (continued)

4. This package is designed to be soldered to a thermal pad on the board. For more information, see Texas Instruments literature number SLUA271 (www.ti.com/lit/slua271).
5. Vias are optional depending on application, refer to device data sheet. If any vias are implemented, refer to their locations shown on this view. It is recommended that vias under paste be filled, plugged or tented.

EXAMPLE STENCIL DESIGN

RUA0042A

WQFN - 0.8 mm max height

PLASTIC QUAD FLATPACK - NO LEAD

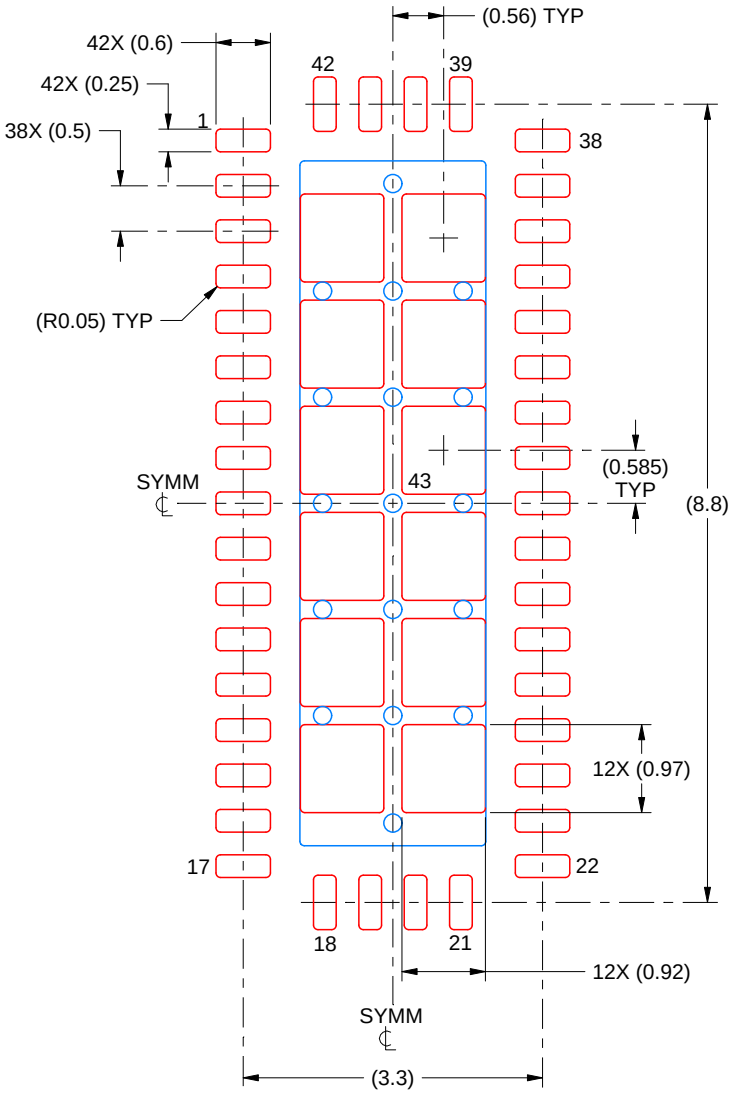

SOLDER PASTE EXAMPLE
BASED ON 0.125 MM THICK STENCIL
SCALE: 12X

EXPOSED PAD 43
69% PRINTED SOLDER COVERAGE BY AREA UNDER PACKAGE

4219139/A 03/2020

NOTES: (continued)

6. Laser cutting apertures with trapezoidal walls and rounded corners may offer better paste release. IPC-7525 may have alternate design recommendations.

IMPORTANT NOTICE AND DISCLAIMER

TI PROVIDES TECHNICAL AND RELIABILITY DATA (INCLUDING DATASHEETS), DESIGN RESOURCES (INCLUDING REFERENCE DESIGNS), APPLICATION OR OTHER DESIGN ADVICE, WEB TOOLS, SAFETY INFORMATION, AND OTHER RESOURCES “AS IS” AND WITH ALL FAULTS, AND DISCLAIMS ALL WARRANTIES, EXPRESS AND IMPLIED, INCLUDING WITHOUT LIMITATION ANY IMPLIED WARRANTIES OF MERCHANTABILITY, FITNESS FOR A PARTICULAR PURPOSE OR NON-INFRINGEMENT OF THIRD PARTY INTELLECTUAL PROPERTY RIGHTS.

These resources are intended for skilled developers designing with TI products. You are solely responsible for (1) selecting the appropriate TI products for your application, (2) designing, validating and testing your application, and (3) ensuring your application meets applicable standards, and any other safety, security, or other requirements. These resources are subject to change without notice. TI grants you permission to use these resources only for development of an application that uses the TI products described in the resource. Other reproduction and display of these resources is prohibited. No license is granted to any other TI intellectual property right or to any third party intellectual property right. TI disclaims responsibility for, and you will fully indemnify TI and its representatives against, any claims, damages, costs, losses, and liabilities arising out of your use of these resources.

TI’s products are provided subject to TI’s Terms of Sale (www.ti.com/legal/termsofsale.html) or other applicable terms available either on ti.com or provided in conjunction with such TI products. TI’s provision of these resources does not expand or otherwise alter TI’s applicable warranties or warranty disclaimers for TI products.

Mailing Address: Texas Instruments, Post Office Box 655303, Dallas, Texas 75265
Copyright © 2020, Texas Instruments Incorporated