TAIWAN SEMICONDUCTOR

RoHS COMPLIANCE

TS317L

3-Terminal Adjustable Positive Voltage Regulator

TO-92



Pin Definition:
1. Adjustable
2. Output
3. Input

SOP-8



Pin Definition:

1. Input	8. N/C
2. Output	7. Output
3. Output	6. Output
4. Adjustable	5. N/C

General Description

The TS317L is adjustable 3-terminal positive voltage regulator capable of supplying in excess of 100mA over an output voltage range of 1.25 V to 37 V. This voltage regulator is exceptionally easy to use and require only two external resistors to set the output voltage. Further, it employs internal current limiting, thermal shutdown and safe area compensation, making it essentially blow-out proof.

Besides replacing fixed regulators, the TS317L is useful in a wide variety of other applications. Since the regulator is "floating " and sees only the input-to-output differential voltage, supplies of several hundred volts can be regulated as long as the maximum input-to-output differential is not exceeded.

Also, it makes an especially simple adjustable switching regulator, a programmable output regulator, or by connecting a fixed resistor between the adjustment and output, the TS317L can be used as a precision current regulator. Supplies with electronic shutdown can be achieved by clamping the adjustment terminal to ground which programs the output to 1.25V where most loads draw little current.

Features

- Output Voltage Range 1.25 to 37V
- Output current in Excess of 100mA
- Eliminates Stocking Many Fixed Voltages
- Internal Thermal Overload Protection
- Current Limit Constant with Temperature
- Output transistor safe-area compensation
- Output voltage offered in 4% tolerance
- Floating Operation for High Voltage Applications

Ordering Information

Part No.	Package	Packing
TS317LCT B0	TO-92	1Kpcs / Bulk
TS317LCT A3	TO-92	2Kpcs / Ammo
TS317LCS RL	SOP-8	2.5Kpcs / 13" Reel

Standard Application Circuit

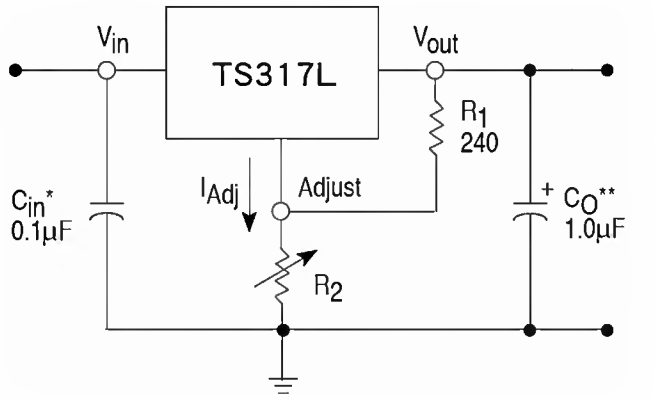

Cin is required if regulator is located an appreciable distance from power supply filter.

Co is not needed for stability, however, it does improve transient response.

$$Vout = 1.25\ V(1 + R2 / R1\ ) + I_{Adj}R2$$

Since I_{Adj} is controlled to less than 100 µA, the error associated with this term is negligible in most applications

TS317L

3-Terminal Adjustable Positive Voltage Regulator

Absolute Maximum Rating (Ta = 25°C unless otherwise noted)

Parameter	Symbol	Limit	Unit
Input Voltage	V_{IN}	40	V
Power Dissipation	P_D	Internal Limited	W
Operating Junction Temperature	T_J	-20~+125	°C
Storage Temperature Range	T_{STG}	-65~+150	°C

Electrical Characteristics

(V_I -V_O = 5.0 V, Io=40mA; T_J =T_{LOW} to T_{HIGH} see [Note 1]; Pmax per [Note 2]; unless otherwise specified.)

Parameter	Figure	Symbol	Min.	Typ.	Max.	Unit
Reference voltage, 3V ≤ Vi-Vo ≤ 40V 10mA ≤ Io ≤ Imax, Pd ≤ Pmax,	3	Vref	1.20	1.25	1.30	V
Line regulation (Note 3) Ta = 25°C, 3V≤Vi-Vo≤40V	1	REGline	--	0.01	0.07	%/V
Load regulation Ta = 25°C, 10mA ≤ I_O ≤ Imax (Note 3)	2	REGload	-- --	5.0 0.1	25 0.5	mV %V
Thermal regulation, Ta = 25°C (Note 6), 20mS Pulse		REGtherm	--	0.03	0.07	%Vo/W
Adjustment pin current	3	Iadj	--	50	100	uA
Adjustment pin current change, 3V ≤ V_I - V_O ≤ 40V 10mA ≤ Io ≤ Imax, Pd ≤ Pmax,	1.2	ΔIadj	--	0.2	5.0	uA
Maximum output current V_I - V_O ≤ 6.25V, Pd ≤ Pmax (TO-92 package) V_I - V_O ≤ 40V, Pd ≤ Pmax, Ta = 25°C (TO-92 package)	3	Imax	100 --	200 20	-- --	mA
Temperature stability (T_{LOW} ≤ Tj ≤ T_{HIGH})	3	T_S	--	1	--	% Vo
Minimum load current to maintain regulation (V_I - V_O = 40 V)	3	ILmin	--	3.5	10	mA
RMS Noise, % of V_O, Ta =25°C, 10Hz ≤ f ≤ 10KHz		N	--	0.003	--	% Vo
Ripple Rejection, Vo =10V, f =120Hz (Note 4) Without Cadj Cadj = 10uF	4	PSRR	-- 66	65 80	-- --	dB
Long-term stability (Note 5), Tj = T_{HIGH} Ta =25 °C for endpoint measurements,1000hrs	3	S	--	0.3	1.0	%

Notes:

1. T_{LOW} to T_{HIGH} = -20°C to +125°C
2. Pmax is internally limited
3. Load and line regulation are specified at constant junction temperature. Changes in V_O due to heating effects must be taken into account separately. Pulse testing with low duty cycle is used.
4. Cadj, when used, is connected between the adjustment pin and ground.
5. Since Long-Term Stability cannot be measured on each device before shipment, this specification is an engineering estimate of average stability from lot to lot.
6. Power dissipation within an IC voltage regulator produces a temperature gradient on the die, affecting individual IC components on the die. These effects can be minimized by proper integrated circuit design and layout techniques. Thermal Regulation in the effect of these temperature gradients on the output voltage and is expressed in the percentage of output change per watt of power change in a specified time.

Functional Block Diagram

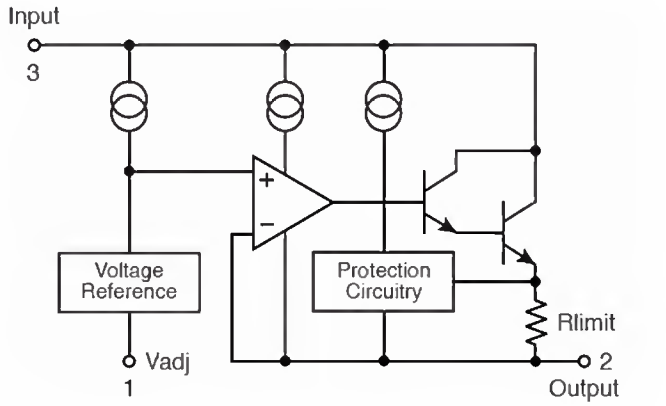

Test Circuit

Figure 1. Line Regulation Test Circuit

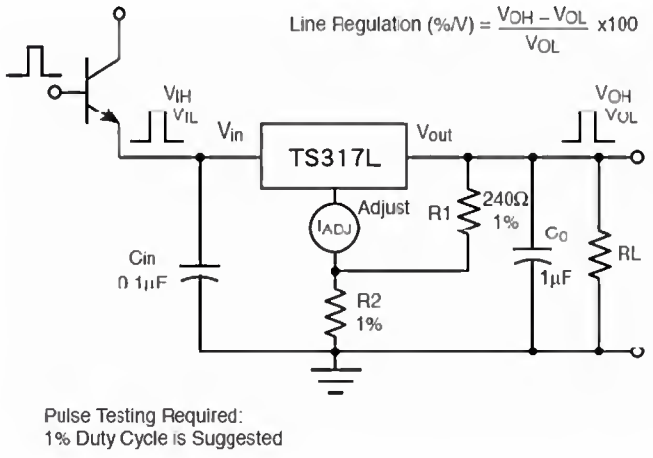

Figure 2. Load Regulation and ΔIadj/Load Test Circuit

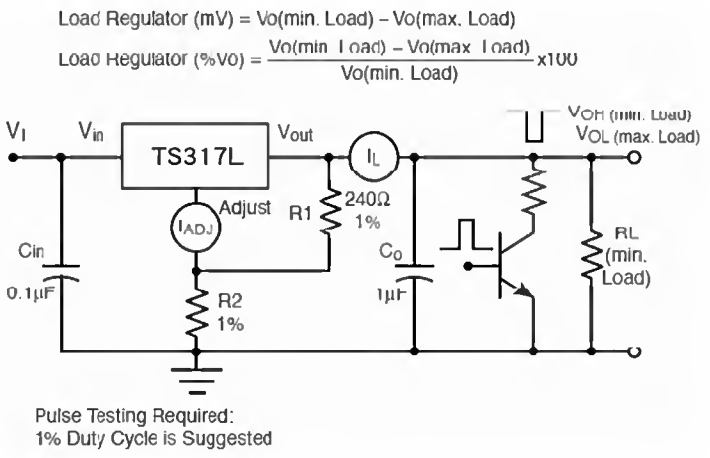

Figure 3. Standard Test Circuit

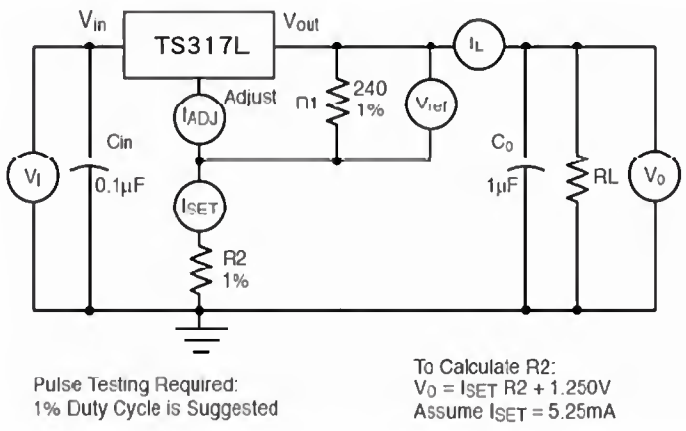

Figure 4. Ripple Rejection Test Circuit

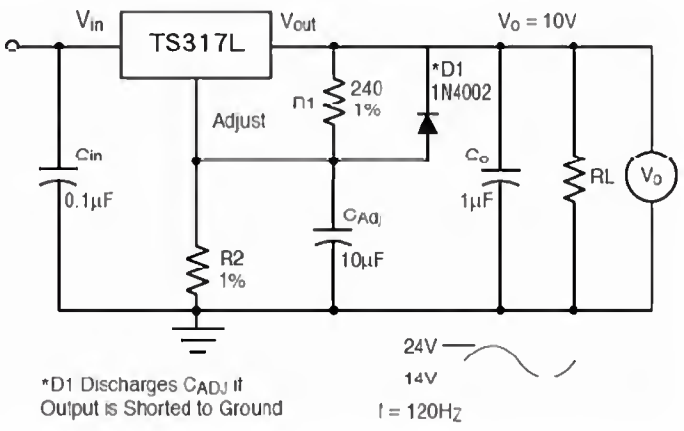

Electrical Characteristics Curve

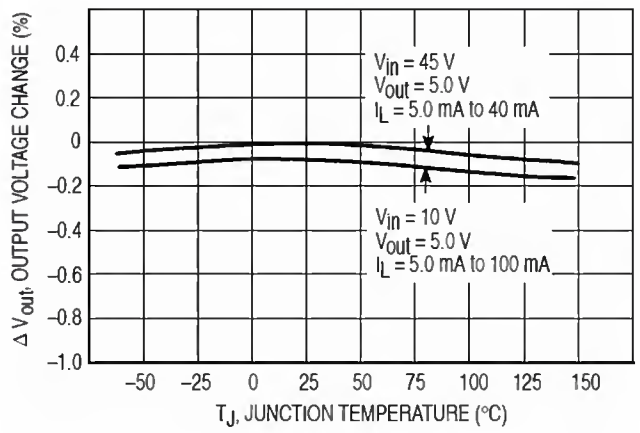

Figure 5. Load Regulation

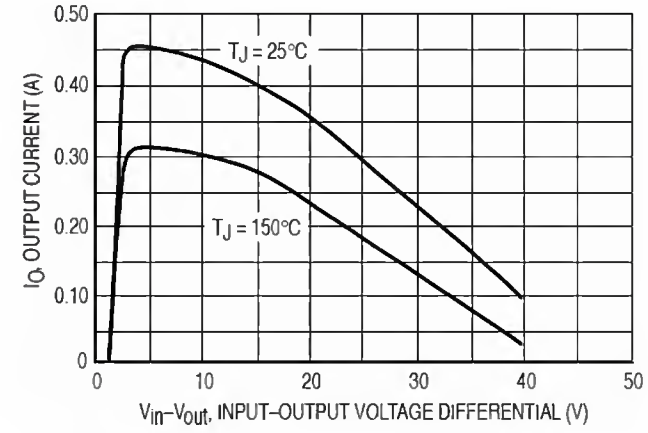

Figure 6. Current Limit

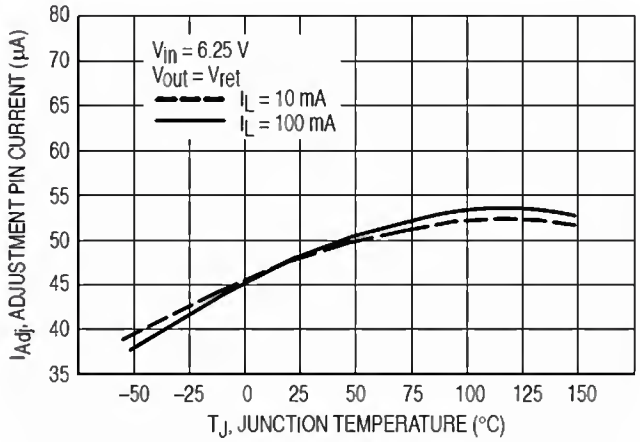

Figure 7. Adjustment Pin Current

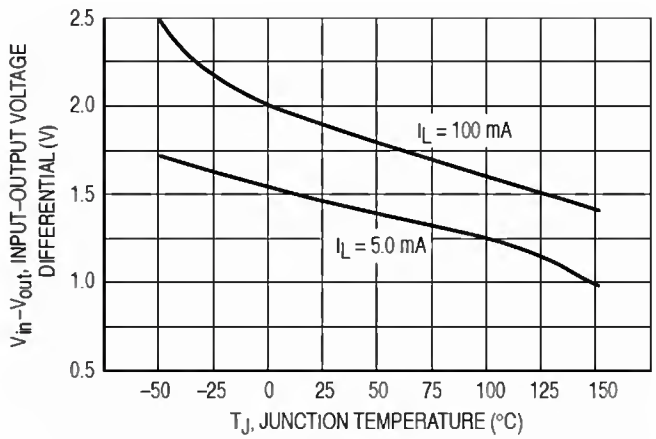

Figure 8. Dropout Voltage

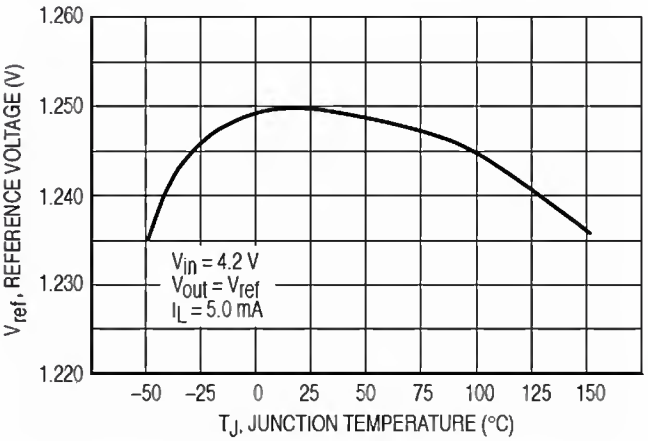

Figure 9. Temperature Stability

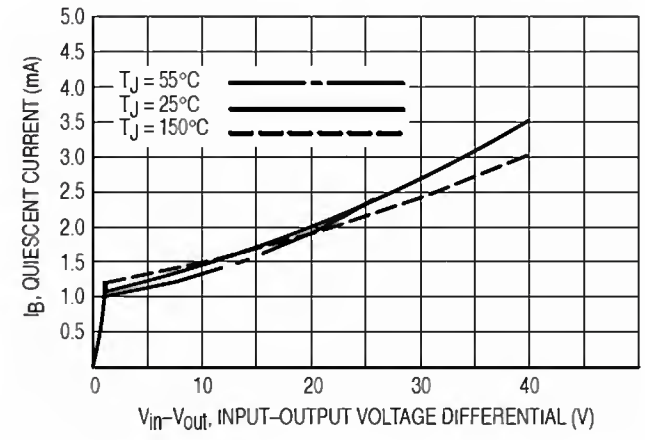

Figure 10. Minimum Operating Current

TS317L

3-Terminal Adjustable Positive Voltage Regulator

Electrical Characteristics Curve

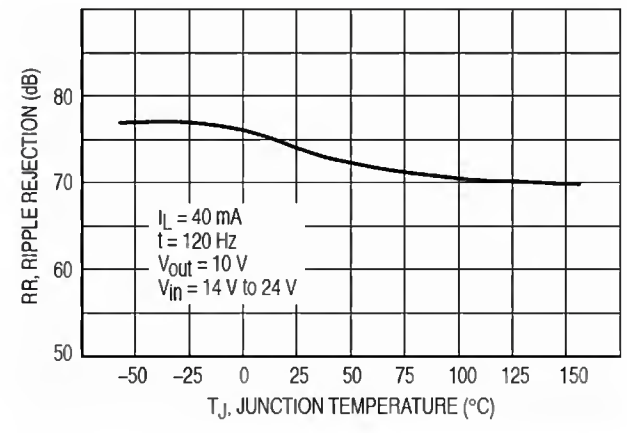

Figure 11. Ripple Rejection

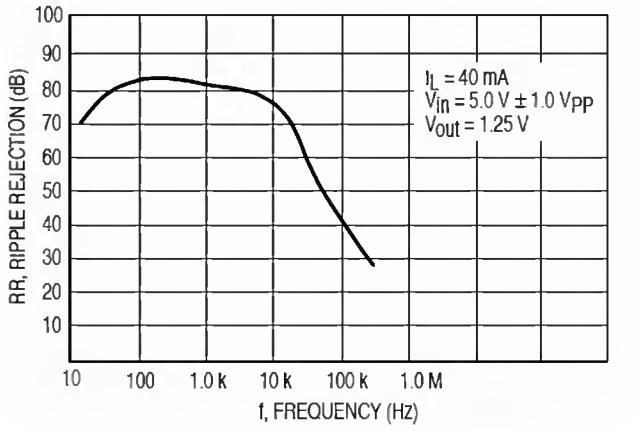

Figure 12. Ripple Rejection vs. Frequency

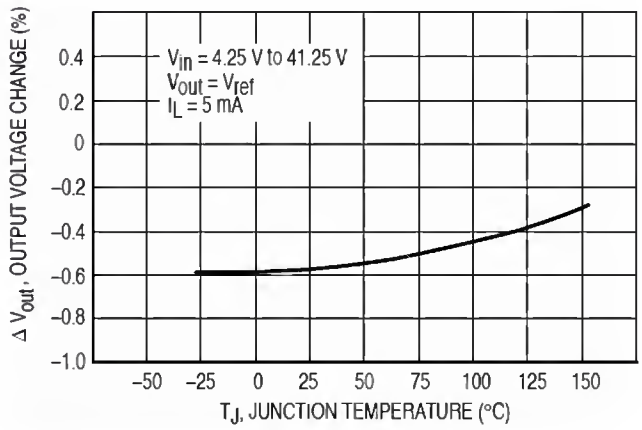

Figure 13. Line Regulation

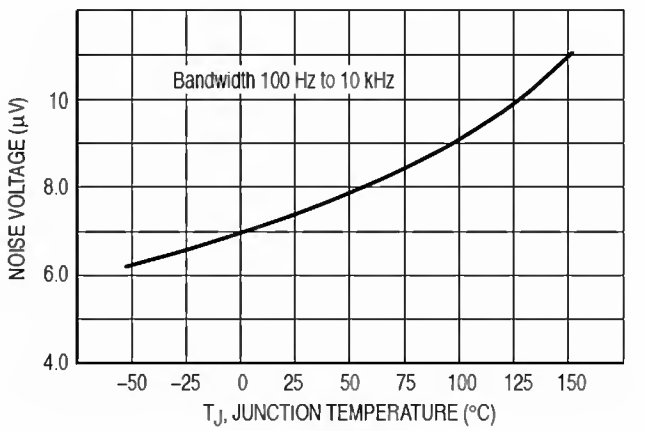

Figure 14. Output Noise

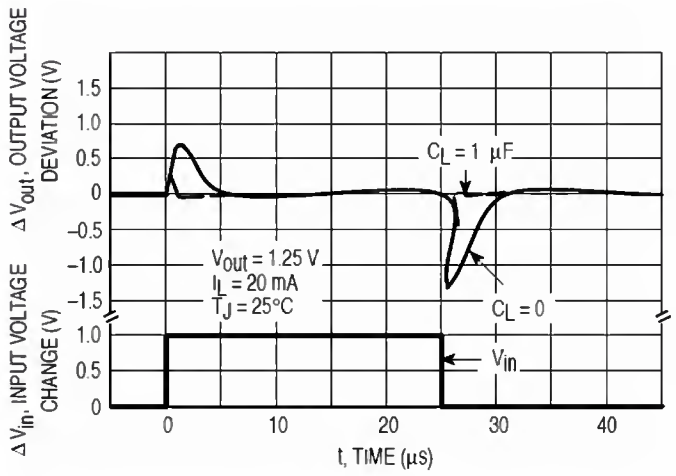

Figure 15. Line Transient Response

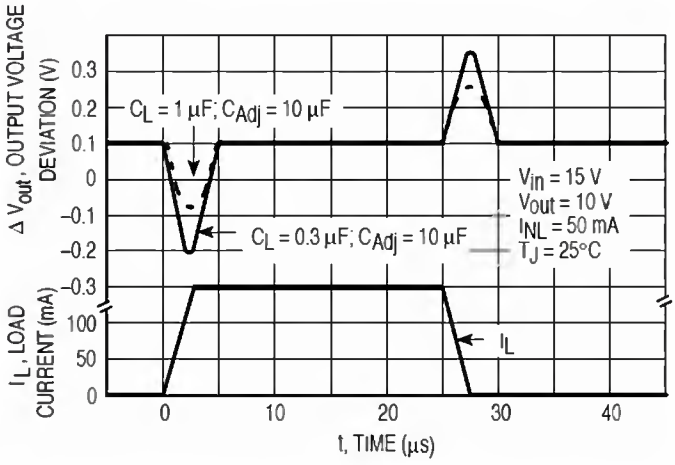

Figure 16. Load Transient Response

Application information

Basic Circuit Operation

The TS317L is a 3-terminal floating regulator. In operation, the TS317L develops and maintains a nominal 1.25V reference (Vref) between its output and adjustment terminals. This reference voltage is converted to a programming current (Iprog.) by R_1 (see Figure 17), and this constant current flows through R_2 to ground. The regulated output voltage is given by:

Vout = Vref (1 + R2 / R1) + Iadj * R2

Since the current from the adjustment terminal (Iadj) represents an error term in the equation, the TS317L was designed to control Iadj to less than 100uA and keep it constant. To do this, all quiescent operating current is returned to the output terminal. This imposes the requirement for a minimum load current. If the load current is less than this minimum, the output voltage will rise.

Since the TS317L is a floating regulator, it is only the voltage differential across the circuit which is important to performance, and operation at high voltages with respect to ground is possible.

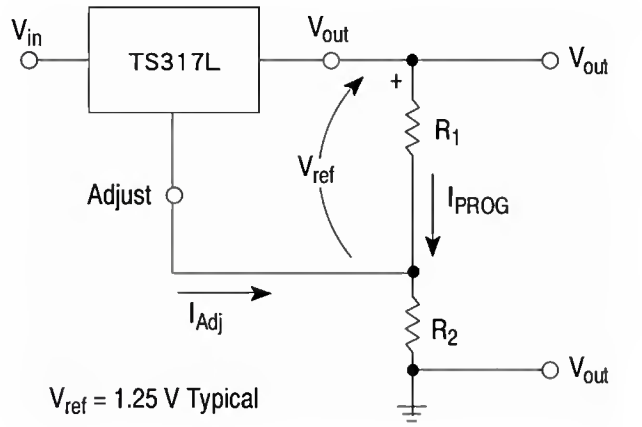

Figure 17. Basic Circuit Configuration

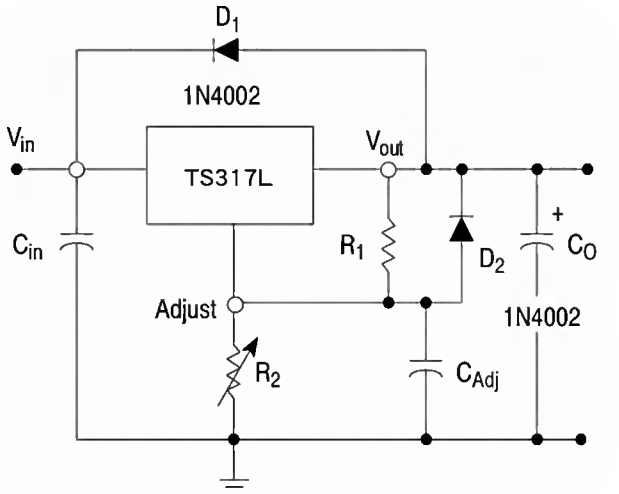

Figure 18. Voltage Regulator with Protection Diode

Protection Diode

When external capacitors are used with any I.C. regulator it is sometimes necessary to add protection diodes to prevent the capacitors from discharging through low current points into the regulator.

Figure 18 shows the TS317L with the recommended protection diodes for output voltages in excess of 25 V or high capacitance values (Co > 25uF, Cadj > 10uF). Diode D1 prevents Co from discharging thru the I.C. during an input short circuit. Diode D2 protects against capacitor C_{ADJ} discharging through the I.C. during an output short circuit. The combination of diodes D1 and D2 prevents C_{ADJ} from discharging through the I.C. during an input short circuit.

Load Regulation

The TS317L is capable of providing extremely good load regulation, but a few precautions are needed to obtain maximum performance. For best performance, the programming resistor (R1) should be connected as close to the regulator as possible to minimize line drops which effectively appear in series with the reference, thereby degrading regulation. The ground end of R2 can be returned near the load ground to provide remote ground sensing and improve load regulation.

External Capacitor

A 0.1μF disc or 1μF tantalum input bypass capacitor (Cin) is recommended to reduce the sensitivity to input line impedance.

The adjustment terminal may be bypassed to ground to improve ripple rejection. This capacitor (Cadj) prevents ripple from being amplified as the output voltage is rejection about 15dB at 120 H_Z in a 10V application.

Although the TS317L is stable with no output capacitance, like any feedback circuit, certain values of external capacitance can cause excessive ringing. An output increased. A 10uμF capacitor should improve ripple capacitance (Co) in the form of a 1uF tantalum or 25uF aluminum electrolytic capacitor on the output swamps this effect and insures stability.

Application information (Continue)

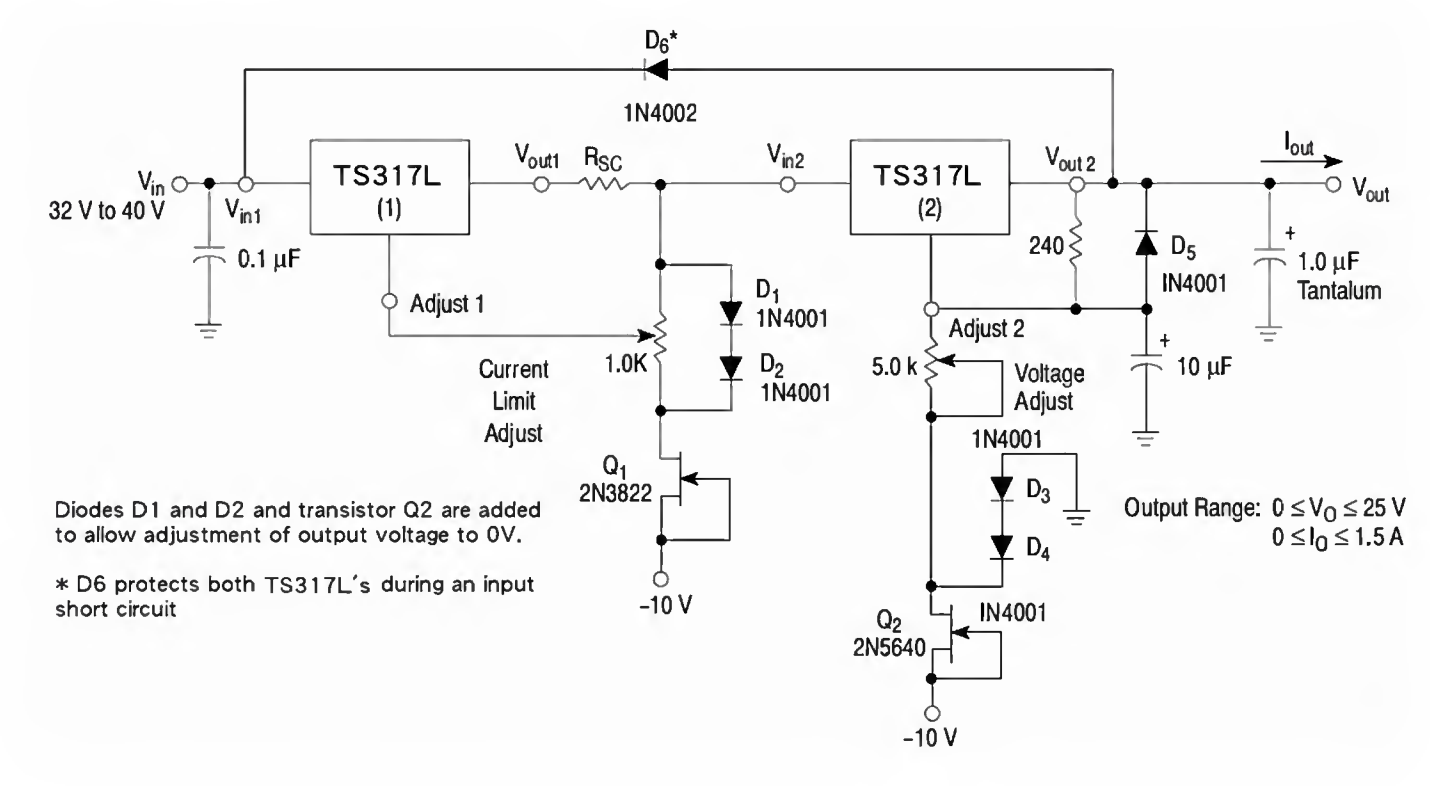

Figure 19. "LABORATORY" power supply with adjustable current limit and output voltage

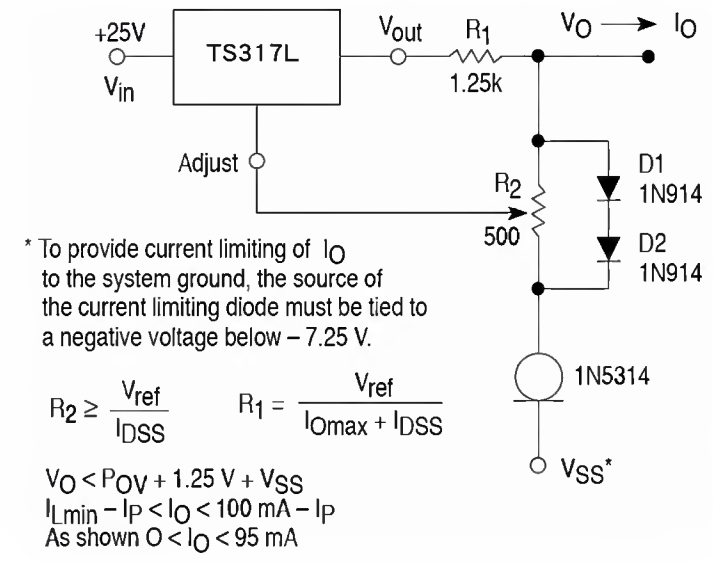

Figure 20. Adjustable Current Limiter

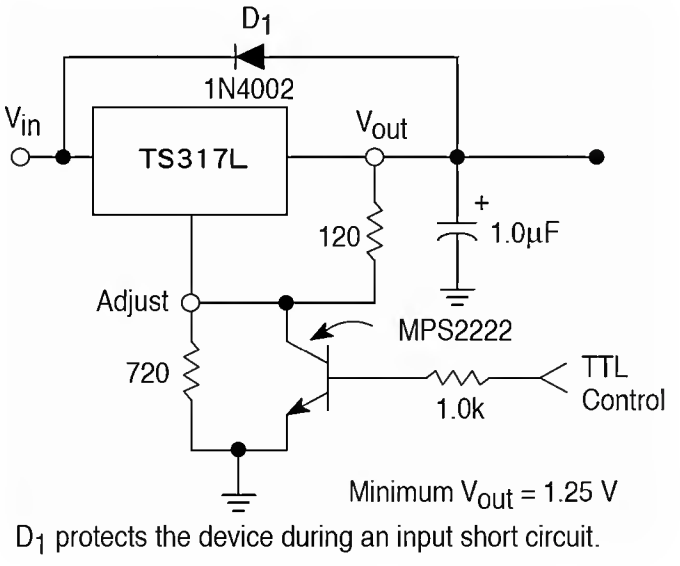

Figure 21. 5V Electronic Shutdown Regulator

Application information (Continue)

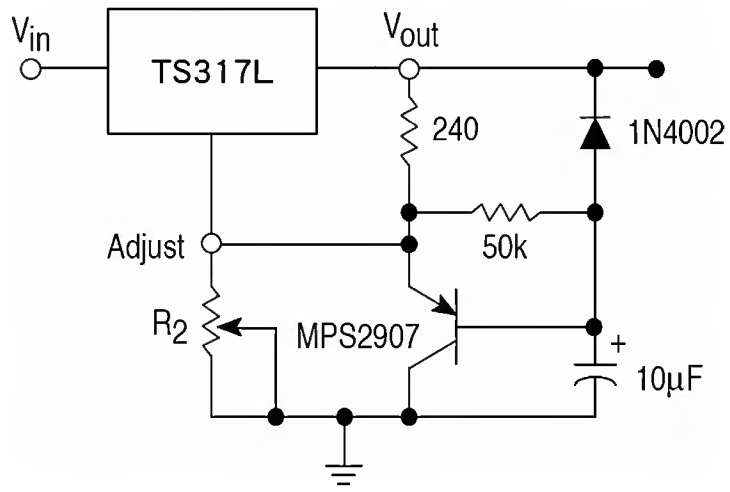

Figure 22. Slow Turn-on Regulator

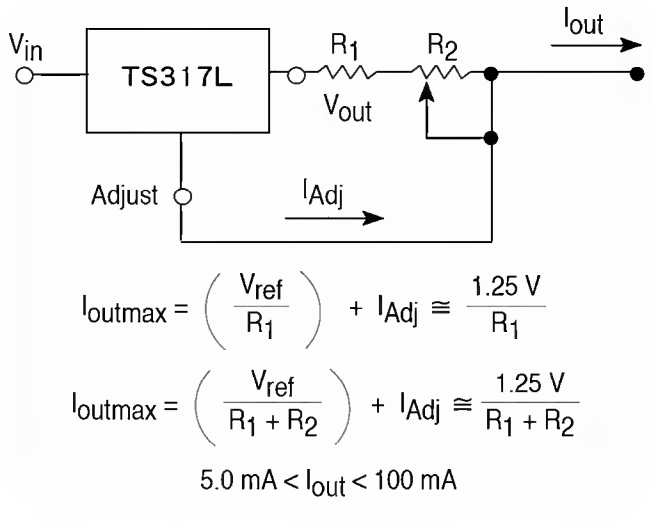

Figure 23. Current Regulator

TS317L

3-Terminal Adjustable Positive Voltage Regulator

TO-92 Mechanical Drawing

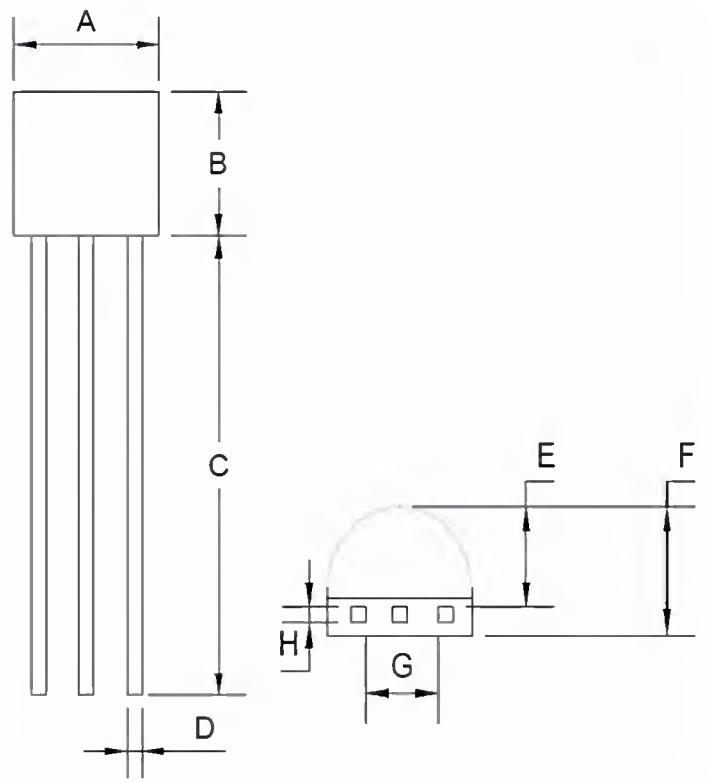

TO-92 DIMENSION				
DIM	MILLIMETERS		INCHES	
	MIN	MAX	MIN	MAX
A	4.30	4.70	0.169	0.185
B	4.30	4.70	0.169	0.185
C	14.30(typ)		0.563(typ)	
D	0.43	0.49	0.017	0.019
E	2.19	2.81	0.086	0.111
F	3.30	3.70	0.130	0.146
G	2.42	2.66	0.095	0.105
H	0.37	0.43	0.015	0.017

Marking Diagram

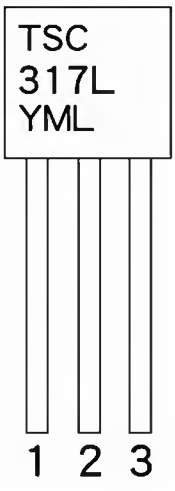

Y = Year Code

M = Month Code
(**A**=Jan, **B**=Feb, **C**=Mar, **D**=Apl, **E**=May, **F**=Jun, **G**=Jul, **H**=Aug, **I**=Sep, **J**=Oct, **K**=Nov, **L**=Dec)

L = Lot Code

TS317L

3-Terminal Adjustable Positive Voltage Regulator

SOP-8 Mechanical Drawing

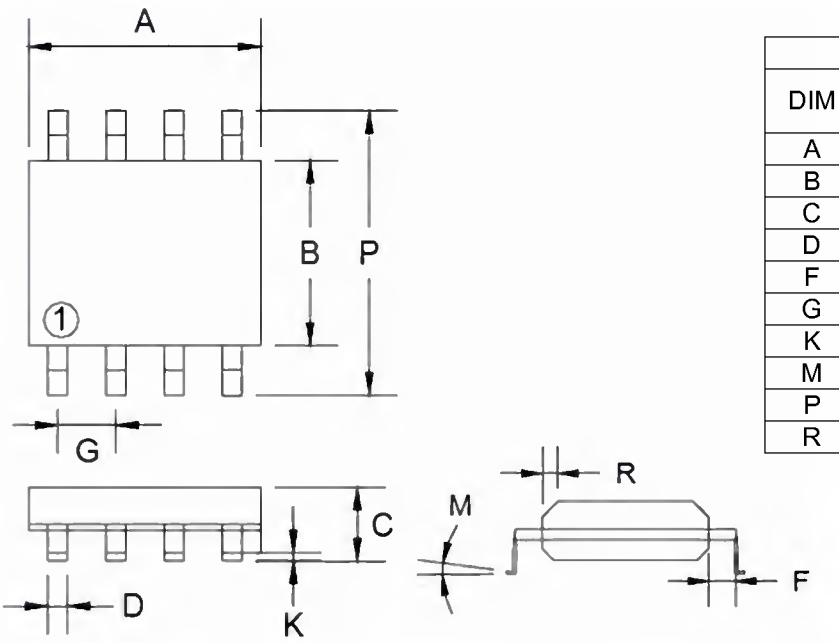

SOP-8 DIMENSION				
DIM	MILLIMETERS		INCHES	
	MIN	MAX	MIN	MAX.
A	4.80	5.00	0.189	0.196
B	3.80	4.00	0.150	0.157
C	1.35	1.75	0.054	0.068
D	0.35	0.49	0.014	0.019
F	0.40	1.25	0.016	0.049
G	1.27BSC		0.05BSC	
K	0.10	0.25	0.004	0.009
M	0°	7°	0°	7°
P	5.80	6.20	0.229	0.244
R	0.25	0.50	0.010	0.019

Marking Diagram

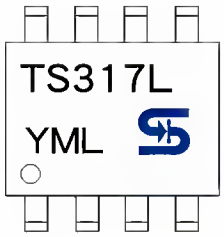

Y = Year Code
M = Month Code
(**A**=Jan, **B**=Feb, **C**=Mar, **D**=Apl, **E**=May, **F**=Jun, **G**=Jul, **H**=Aug, **I**=Sep, **J**=Oct, **K**=Nov, **L**=Dec)
L = Lot Code

Notice

Specifications of the products displayed herein are subject to change without notice. TSC or anyone on its behalf, assumes no responsibility or liability for any errors or inaccuracies.

Information contained herein is intended to provide a product description only. No license, express or implied, to any intellectual property rights is granted by this document. Except as provided in TSC's terms and conditions of sale for such products, TSC assumes no liability whatsoever, and disclaims any express or implied warranty, relating to sale and/or use of TSC products including liability or warranties relating to fitness for a particular purpose, merchantability, or infringement of any patent, copyright, or other intellectual property right.

The products shown herein are not designed for use in medical, life-saving, or life-sustaining applications. Customers using or selling these products for use in such applications do so at their own risk and agree to fully indemnify TSC for any damages resulting from such improper use or sale.