High Efficiency 1A/2A/3A Current-Mode Synchronous Buck DC/DC Converter, 2MHz and 470mA LDO

DESCRIPTION

The TS30021 (1A), TS30022 (2A) and TS30023 (3A) are DC/DC synchronous switching regulator with fully integrated power switches, internal compensation, and full fault protection, with a low-dropout regulator. The switching frequency of 2MHz enables the use of small filter components resulting in minimal board space and reduced BOM costs. In addition, a 470mA LDO with external voltage adjustment is provided. The LDO is capable of working at the VCC supply.

The TS30021/22/23 utilizes current mode feedback in normal regulation PWM mode. When the regulator is disabled (EN is low), the device draws less than 10uA quiescent current.

The TS30021/22/23 integrates a wide range of protection circuitry including input supply under-voltage lockout, output voltage soft start, current limit, and thermal shutdown.

The TS30021/22/23 includes supervisory reporting through the PG (Power Good) open drain output to interface other components in the system.

APPLICATIONS

- On-card switching regulators
- Set-top box, DVD, LCD, LED supply
- Industrial power supplies

FEATURES

- **Fixed output voltage choices: 1.5V, 1.8V, 2.5V, 3.3V, and 5V with +/- 2% output tolerance**
- **Adjustable version output voltage range: 0.8V to 5V with +/- 1.5% reference**
- **Wide input voltage range TS30021/22/23: 4.5V to 16V (18V Abs Max)**
- 2MHz +/- 10% fixed switching frequency
- Continuous output current: 1A (TS30021), 2A (TS30022) and 3A (TS30023)
- High efficiency – up to 95%
- Current mode PWM control with PFM mode for improved light load efficiency
- Voltage supervisor for V_{OUT} reported at the PG pin
- Input supply under voltage lockout
- Soft start for controlled startup with no overshoot
- Full protection for over-current, over-temperature, and V_{OUT} over-voltage
- Less than 10uA in shutdown mode
- Low external component count
- LDO has adjustable output voltage 0.8V to 5V and 470mA output current capability

SUMMARY SPECIFICATION

- Junction operating temperature -40 ℃ to 125 ℃
- Packaged in a 16pin QFN (3x3)

TYPICAL APPLICATIONS

Adjustable Switcher Output

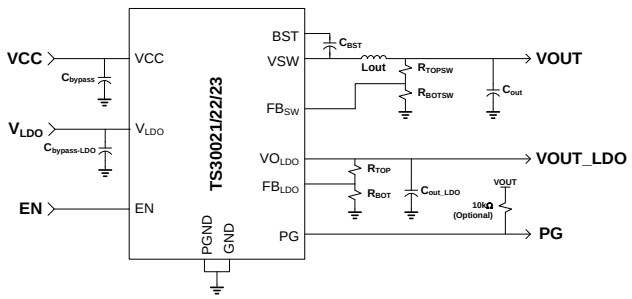

Fixed Switcher Output

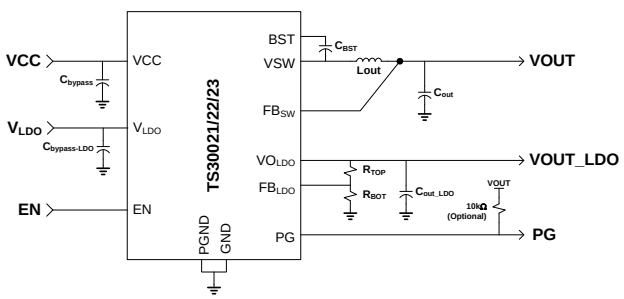

Copyright © 2013, Triune Systems, LLC
TRIUNE SYSTEMS PROPRIETARY & CONFIDENTIAL INFORMATION

PINOUT

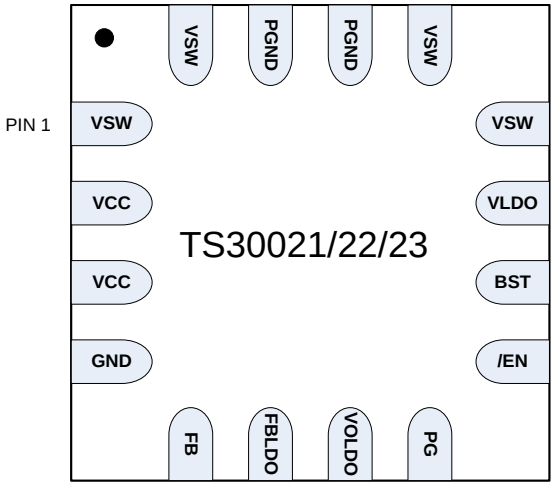

Figure 1: 16 Lead 3x3 QFN, Top View

PIN DESCRIPTION FOR 16 LEAD 3X3 QFN

Pin Symbol	Pin #	Function	Description
VSW	1	Switching Voltage Node	Connected to 1.5uH (typical) inductor
VCC	2	Input Voltage	Input voltage
VCC	3	Input Voltage	Input voltage
GND	4	GND	Primary ground for the majority of the device except the low-side power FET
FB	5	Feedback Input for Switcher	Switching Regulator FB Voltage. Connects to V_{OUT} for fixed mode and the output resistor divider for adjustable mode
FB_{LDO}	6	Feedback Input for LDO	LDO Regulator FB Voltage. Connects to output resistor divider to adjust LDO voltage
VO_{LDO}	7	LDO Output	LDO regulator output
PG	8	PG Output	Open-drain output
EN	9	Enable Input	Active high enable pin. Includes internal pull-up.
BST	10	Bootstrap Capacitor	Bootstrap capacitor for the high-side FET gate driver. 22nF ceramic capacitor from BST pin to VSW pin
V_{LDO}	11	LDO Input Voltage	Input Voltage for LDO regulator
VSW	12	Switching Voltage Node	Connected to 1.5uH (typical) inductor
VSW	13	Switching Voltage Node	Connected to 1.5uH (typical) inductor
PGND	14	Power GND	GND supply for internal low-side FET/integrated diode
PGND	15	Power GND	GND supply for internal low-side FET/integrated diode
VSW	16	Switching Voltage Node	Connected to 1.5uH (typical) inductor

Copyright © 2013, Triune Systems, LLC
TRIUNE SYSTEMS PROPRIETARY & CONFIDENTIAL INFORMATION

FUNCTIONAL BLOCK DIAGRAM

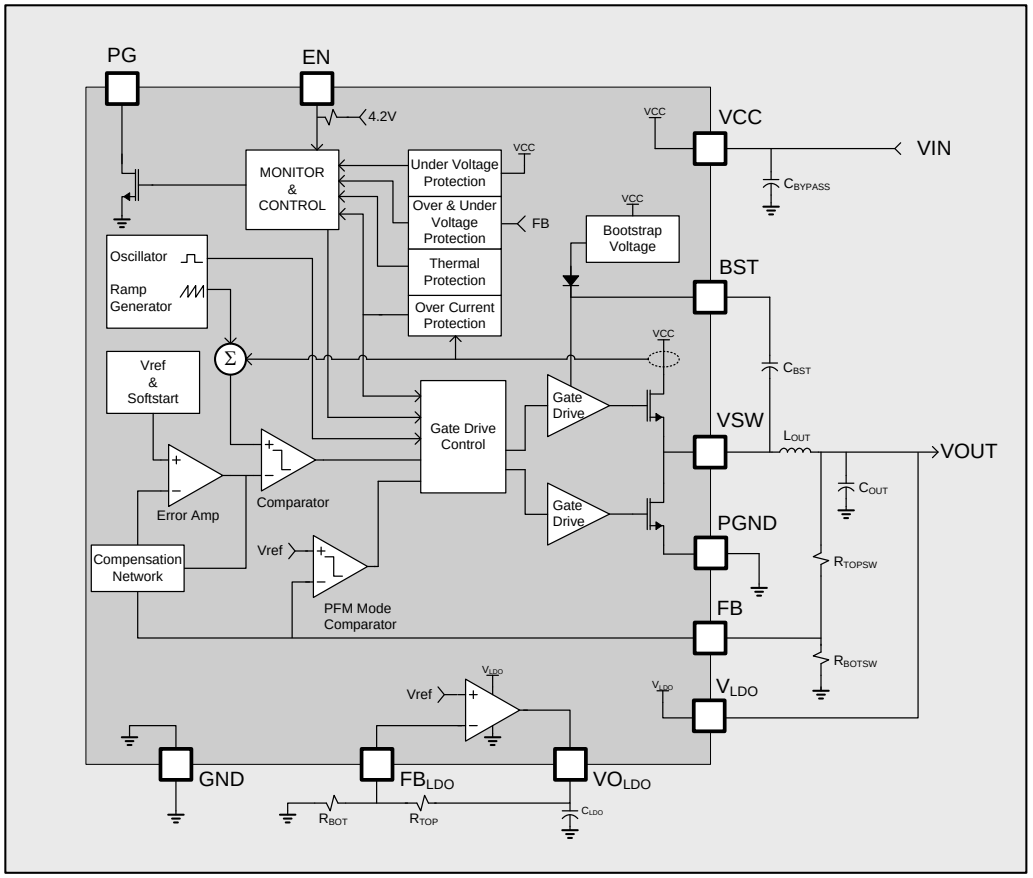

Figure 2: TS30021/22/23 Block Diagram

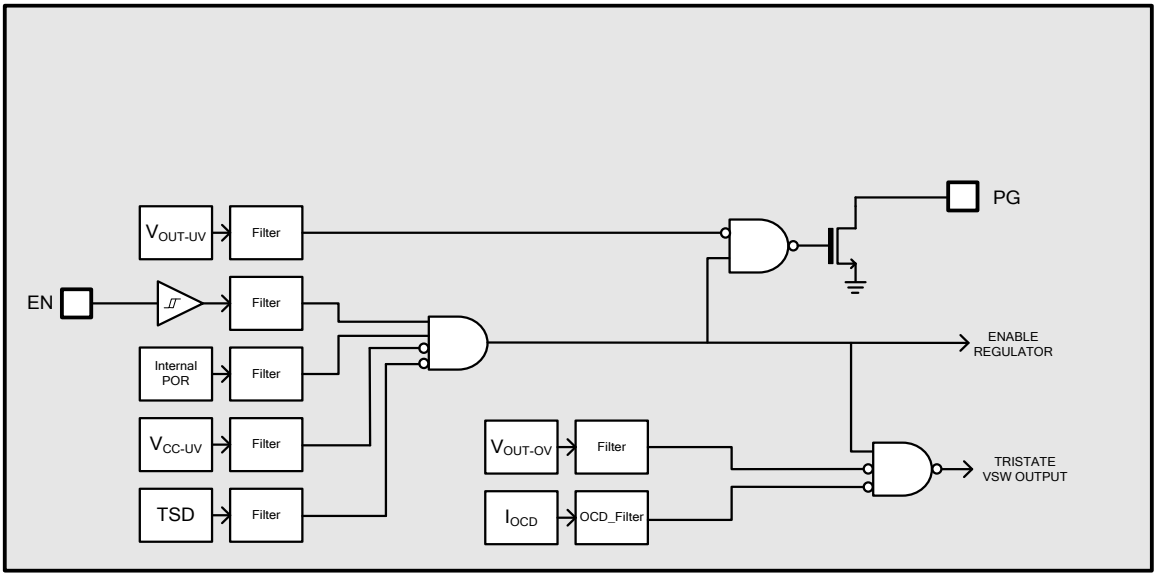

Figure 3: Monitor & Control Logic Functionality

Copyright © 2013, Triune Systems, LLC
TRIUNE SYSTEMS PROPRIETARY & CONFIDENTIAL INFORMATION

ABSOLUTE MAXIMUM RATINGS

Over operating free–air temperature range unless otherwise noted(1, 2)

Parameter	Value	Unit
VCC, V_{LDO}	-0.3 to 18	V
BST	-0.3 to (VCC+6)	V
VSW	-1 to 18	V
EN, PG,FB, FB_{LDO}, VO_{LDO}	-0.3 to 6	V
Electrostatic Discharge – Human Body Model	+/-2k	V
Electrostatic Discharge – Charge Device Model	+/-500	V
Lead Temperature (soldering, 10 seconds)	260	°C

(1) Stresses beyond those listed under "absolute maximum ratings" may cause permanent damage to the device. These are stress ratings only and functional operation of the device at these or any other conditions beyond those indicated under "recommended operating conditions" is not implied. Exposure to absolute–maximum–rated conditions for extended periods may affect device reliability.

(2) All voltage values are with respect to network ground terminal.

THERMAL CHARACTERISTICS

Symbol	Parameter	Value	Unit
θ_{JA}	Thermal Resistance Junction to Air (Note 1)	38	°C/W
T_{STG}	Storage Temperature Range	-65 to 150	°C
$T_{J\ MAX}$	Maximum Junction Temperature	150	°C
T_J	Operating Junction Temperature Range	-40 to 125	°C

Note 1: Assumes 16LD 3x3 QFN with hi-K JEDEC board and 13.5 inch² of 1 oz Cu

RECOMMENDED OPERATING CONDITIONS

Symbol	Parameter	Min	Typ	Max	Unit
VCC	Input Operating Voltage	4.5	12	16	V
V_{LDO}	LDO Input Operating Voltage	2.2		16	V
C_{BST}	Bootstrap Capacitor	17.6	22	26.4	nF
L_{OUT}	Output Filter Inductor Typical Value (Note 1)	1.2	1.5	1.8	uH
C_{OUT}	Output Filter Capacitor Typical Value (Note 2)	17.6	22		uF
C_{OUT_LDO}	LDO Output Filter Capacitor Typical Value (Note 2)		1		uF
$C_{OUT\text{-}ESR}$	Output Filter Capacitor ESR	2		100	mΩ
C_{BYPASS}	Input Supply Bypass Capacitor Typical Value (Note 3)	8	10		uF
$C_{BYPASS\text{-}LDO}$	LDO Input Supply Bypass Capacitor Typical Value (Note 3)	8	10		uF

Note 1: For best performance, an inductor with a saturation current rating higher than the maximum V_{OUT} load requirement plus the inductor current ripple.
Note 2: For best performance, a low ESR ceramic capacitor should be used.
Note 3: For best performance, a low ESR ceramic capacitor should be used. If C_{BYPASS} is not a low ESR ceramic capacitor, a 0.1uF ceramic capacitor should be added in parallel to C_{BYPASS}.

Copyright © 2013, Triune Systems, LLC
TRIUNE SYSTEMS PROPRIETARY & CONFIDENTIAL INFORMATION

ELECTRICAL CHARACTERISTICS

Electrical Characteristics, T_J = -40C to 125C, VCC = 12V (unless otherwise noted)

Symbol	Parameter	Condition	Min	Typ	Max	Unit
VCC Supply Voltage						
VCC	Input Supply Voltage		4.5		16	V
$I_{CC-NORM}$	Quiescent current Normal Mode	VCC = 12V, I_{LOAD} = 0A		5.2		mA
$I_{CC-NOSWITCH}$	Quiescent current Normal Mode – Non-switching	VCC=12V, I_{LOAD}=0A, Non-switching		2.3		mA
$I_{CC-STBY}$	Quiescent current Standby Mode	VCC = 12V, EN = 0V		5	10	uA
VCC Under Voltage Lockout						
VCC_{-UV}	Input Supply Under Voltage Threshold	VCC Increasing	4.0		4.5	V
VCC_{-UV_HYST}	Input Supply Under Voltage Threshold Hysteresis			650		mV
OSC						
F_{OSC}	Oscillator Frequency		1.8	2	2.2	MHz
PG Open Drain Output						
T_{PG}	PG Release Timer	PG de-assert from low to high		150		ms
I_{OH-PG}	High-Level Output Leakage	V_{PG} = 5V		0.5		uA
V_{OL-PG}	Low-Level Output Voltage	I_{PG} = -0.3mA			0.01	V
EN Input Voltage Thresholds						
V_{IH-EN}	High Level Input Voltage		2.2			V
V_{IL-EN}	Low Level Input Voltage				0.8	V
$V_{HYST-EN}$	Input Hysteresis			480		mV
I_{IN-EN}	Input Leakage	V_{EN}=5V		3.5		uA
		V_{EN}=0V		8.0		uA
Thermal Shutdown						
TSD	Thermal Shutdown Junction Temperature	Note: not tested in production	150	170		°C
TSD_{HYST}	TSD Hysteresis	Note: not tested in production		10		°C

Copyright © 2013, Triune Systems, LLC
TRIUNE SYSTEMS PROPRIETARY & CONFIDENTIAL INFORMATION

REGULATOR CHARACTERISTICS

Electrical Characteristics, T_J = -40C to 125C, VCC = 12V (unless otherwise noted)

Symbol	Parameter	Condition	Min	Typ	Max	Unit
Switch Mode Regulator: L=1.5uH and C=22uF						
$V_{OUT-PWM}$	Output Voltage Tolerance in PWM Mode	I_{LOAD} =1A	V_{OUT} – 2%	V_{OUT}	V_{OUT} + 2%	V
$V_{OUT-PFM}$	Output Voltage Tolerance in PFM Mode	I_{LOAD} = 0A	V_{OUT} – 1%	V_{OUT} + 1%	V_{OUT} + 3.5%	V
R_{DSON}	High Side Switch On Resistance	I_{VSW} = -1A (Note 1)		180		mΩ
	Low Side Switch On Resistance	I_{VSW} = 1A (Note 1)		120		mΩ
$I_{OUT,SW}$	Output Current, Switcher	TS30023 (Note 4)			3	A
		TS30012 (Note 4)			2	A
		TS30011			1	A
$I_{OCD,SW}$	Over Current Detect, Switcher	HS switch current TS30023	3.4	3.8	4.4	A
		HS switch current TS30012	2.4	2.8	3.4	A
		HS switch current TS30011	1.4	1.8	2.4	A
$FB_{TH, SW}$	Feedback Reference, Switcher (Adjustable Mode)	(Note 3)		0.8		V
FB_{TH-TOL}	Feedback Reference Tolerance	(Note 3)	-1.5		1.5	%
T_{SS}	Soft start Ramp Time			4		ms
FB_{TH-PFM}	PFM Mode FB Comparator Threshold			V_{OUT} + 1%		V
V_{OUT-UV}	V_{OUT} Under Voltage Threshold		91% V_{OUT}	93% V_{OUT}	95% V_{OUT}	
V_{OUT-UV_HYST}	V_{OUT} Under Voltage Hysteresis			1.5% V_{OUT}		
V_{OUT-OV}	V_{OUT} Over Voltage Threshold			103% V_{OUT}		
V_{OUT-OV_HYST}	V_{OUT} Over Voltage Hysteresis			1% V_{OUT}		
$DUTY_{MAX}$	Max Duty Cycle	(Note 2)	95%	97%	99%	
LDO Regulator						
$VO_{DROPOUT}$	Dropout Voltage, LDO	VO_{LDO} = 1.2V, $I_{OUT,LDO}$ = 450mA		0.8		V
VO_{LDO}	Output Voltage, LDO		0.8		V_{LDO} - $VO_{DROPOUT}$	V
$I_{OUT,LDO}$	Output Current, LDO				470	mA
$I_{OCD,LDO}$	Over Current Detect, Switcher			490		mA
FB_{THLDO}	Feedback Reference, LDO			0.8		V

Note 1: R_{DSON} is characterized at 1A and tested at lower current in production.
Note 2: Regulator VSW pin is forced off for 240ns every 8 cycles to ensure the BST cap is replenished.
Note 3: For the adjustable version, the ratio of VCC/Vout cannot exceed 16.
Note 4: Based on Over Current Detect testing

Copyright © 2013, Triune Systems, LLC
TRIUNE SYSTEMS PROPRIETARY & CONFIDENTIAL INFORMATION

FUNCTIONAL DESCRIPTION

The TS30021/22/23 current-mode synchronous step-down power supply product is ideal for use in the commercial, industrial, and automotive market segments. It includes flexibility to be used for a wide range of output voltage and is optimized for high efficiency power conversion with low R_{DSON} integrated synchronous switches. A 2MHz internal switching frequency facilitates low cost LC filter combinations. Additionally, the fixed output versions enable a minimum external component count to provide a complete regulation solution with only 4 external components: an input bypass capacitor, an inductor, an output capacitor, and the bootstrap capacitor. The regulator automatically transitions between PFM and PWM mode to maximize efficiency for the load demand.

In addition, the TS30021/22/23 provides a linear low drop-out regulator capable of operating over a wide range of output voltage, input voltage and output current. LDO operation only requires 4 external components: an input bypass capacitor, an output capacitor and two resistors to set output voltage. It features a separate input supply pin that is regulated down to the output voltage. This supply input can be connected to the main SMPS supply (VCC) or the SMPS output (VOUT) or to a separate supply thus making the device very flexible.

The TS30021/22/23 was designed to provide these system benefits:

- Reduced board real estate
- Lower system cost
  - Lower cost inductor
  - Low external parts count
- Ease of design
  - Bill of Materials and suggested board layout provided
  - Power Good output
  - Integrated compensation network
  - Wide input voltage range
- Robust solution
  - Over current, over voltage and over temperature protection

DETAILED PIN DESCRIPTION

Unregulated input, VCC
This terminal is the unregulated input voltage source for the IC. It is recommended that a 10uF bypass capacitor be placed close to the device for best performance. Since this is the main supply for the IC, good layout practices need to be followed for this connection.
Bootstrap control, BST
This terminal will provide the bootstrap voltage required for the upper internal NMOS switch of the buck regulator. An external ceramic capacitor placed between the BST input terminal and the VSW pin will provide the necessary voltage for the upper switch. In normal operation the capacitor is re-charged on every low side synchronous switching action. In the case of where the switch mode approaches 100% duty cycle for the high side FET, the device will automatically reduce the duty cycle switch to a minimum off time on every 8th cycle to allow this capacitor to re-charge.
Sense feedback, FB
This is the input terminal for the output voltage feedback.

For the fixed mode versions, this should be hooked directly to V_{OUT}. The connection on the PCB should be kept as short as possible, and should be made as close as possible to the capacitor. The trace should not be shared with any other connection.

For adjustable mode versions, this should be connected to the external resistor divider. To choose the resistors, use the following equation:

$$V_{OUT} = 0.8\ (1 + R_{TOPSW}/R_{BOTSW})$$

Copyright © 2013, Triune Systems, LLC
TRIUNE SYSTEMS PROPRIETARY & CONFIDENTIAL INFORMATION

The input to the FB pin is high impedance, and input current should be less than 100nA. As a result, good layout practices are required for the feedback resistors and feedback traces. When using the adjustable version, the feedback trace should be kept as short as possible and minimum width to reduce stray capacitance and to reduce the injection of noise.

For the adjustable version, the ratio of VCC/Vout cannot exceed 16.

Switching output, VSW
This is the switching node of the regulator. It should be connected directly to the 1.5uH inductor with a wide, short trace and to one end of the Bootstrap capacitor. It is switching between VCC and PGND at the switching frequency.
Ground, GND
This ground is used for the majority of the device including the analog reference, control loop, and other circuits.
Power Ground, PGND
This is a separate ground connection used for the low side synchronous switch to isolate switching noise from the rest of the device.
Enable, high-voltage, EN
This is the input terminal to activate both the switching regulator and LDO. The input threshold is TTL/CMOS compatible. It also has an internal pull-up to ensure a stable state if the pin is disconnected.

Option available for sequential power-up of switching regulator first, followed by activating the LDO after switching regulator voltage is above $V_{OUT\text{-}UV}$ threshold.

PG Output, PG
This is an open drain, active low output. The switched mode output voltage is monitored and the PG line will remain low until the output voltage reaches the $V_{OUT\text{-}UV}$ threshold. Once the internal comparator detects the output voltage is above the desired threshold, an internal delay timer is activated and the PG line is de-asserted to high once this delay timer expires. In the event the output voltage decreases below $V_{OUT\text{-}UV}$, the PG line will be asserted low and remain low until the output rises above $V_{OUT\text{-}UV}$ and the delay timer times out. See Figure 2 for the circuit schematic for the PG signal.

Options are available for PG only based on switcher output voltage, or the combination of both switcher and LDO outputs being higher than the $V_{OUT\text{-}UV}$ thresholds.

Unregulated LDO input, V_{LDO}
This terminal is the unregulated input voltage source for regulation stage of the LDO. It is recommended that a 10uF bypass capacitor be placed close to the device for best performance.
LDO Sense feedback, FB_{LDO}
This is the input terminal for the adjustable voltage feedback for the LDO. The following formula determines the output voltage.

$$VO_{LDO} = 0.8\ (1 + R_{TOP}/R_{BOT})$$

The same guidelines as given for the switching regulator FB pin apply to the LDO FB pin as well.

Regulated LDO Output, VO_{LDO}
This terminal is the output of the LDO and should be connected to a 1uF output capacitor.

INTERNAL PROTECTION DETAILS

SMPS Internal Current Limit
The current through the high side FET is sensed on a cycle by cycle basis and if current limit is reached, it will abbreviate the cycle. In addition, the device senses the FB pin to identify hard short conditions and will direct the VSW output to skip 4 cycles if current limit occurs when FB is low. This allows current built up in the inductor during the minimum on time to decay sufficiently. Current limit is always active when the regulator is enabled. Soft start ensures current limit does not prevent regulator startup.

Copyright © 2013, Triune Systems, LLC
TRIUNE SYSTEMS PROPRIETARY & CONFIDENTIAL INFORMATION

Under extended over current conditions (such as a short), the device will automatically disable. Once the over current condition is removed, the device returns to normal operation automatically. (Alternately the factory can configure the device's NVM to shutdown the regulator if an extended over current event is detected and require a toggle of the Enable pin to return the device to normal operation.)

Thermal Shutdown

If the temperature of the die exceeds 170°C (typical), the VSW outputs will tri-state to protect the device from damage. The PG and all other protection circuitry will stay active to inform the system of the failure mode. Once the device cools to 160°C (typical), the device will start up again, following the normal soft start sequence. If the device reaches 170°C, the shutdown/restart sequence will repeat.

SMPS Reference Soft Start

The reference in this device is ramped at a rate of 4ms to prevent the output from overshoot during startup. This ramp restarts whenever there is a rising edge sensed on the Enable pin. This occurs in both the fixed and adjustable versions. During the soft start ramp, current limit is still active, and will still protect the device in case of a short on the output.

SMPS Output Overvoltage

If the output of the regulator exceeds 103% of the regulation voltage, the VSW outputs will tri-state to protect the device from damage. This check occurs at the start of each switching cycle. If it occurs during the middle of a cycle, the switching for that cycle will complete, and the VSW outputs will tri-state at the beginning of the next cycle.

VCC Under-Voltage Lockout

The device is held in the off state until VCC reaches 5.75V (typical). There is a 500mV hysteresis on this input, which requires the input to fall below 5.25V (typical) before the device will disable.

LDO Internal Current Limit

The LDO output current is sensed and if current limit is reached, it will restrict further current draw from the LDO. Current limit is always active when the regulator is enabled.

Copyright © 2013, Triune Systems, LLC
TRIUNE SYSTEMS PROPRIETARY & CONFIDENTIAL INFORMATION

TYPICAL PERFORMANCE CHARACTERISTICS

T_J = -40C to 125C, VCC = 12V (unless otherwise noted)

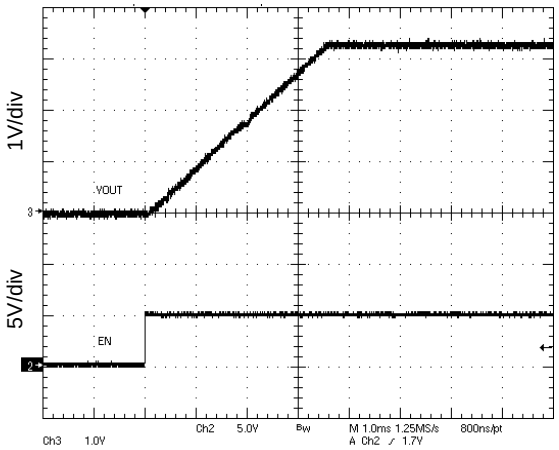

Figure 4. Startup Response

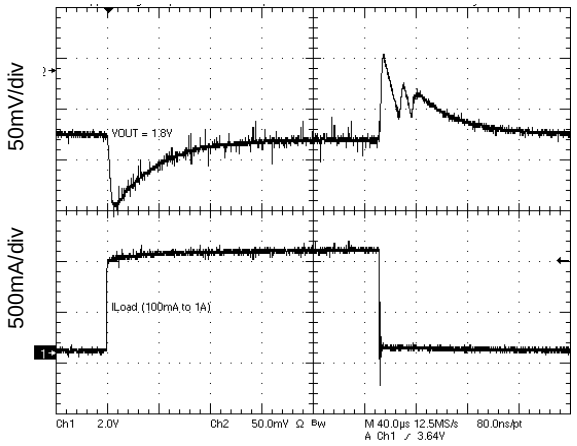

Figure 5. 100mA to 1A Load Step (Vcc=12V, V_{OUT}=1.8V)

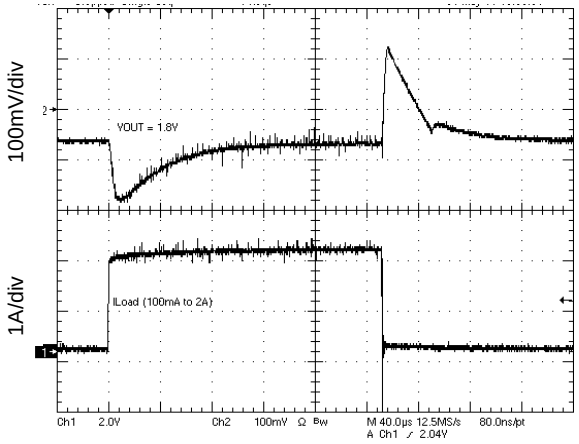

Figure 6. 100mA to 2A Load (V_{CC}=12V, V_{OUT}=1.8V)

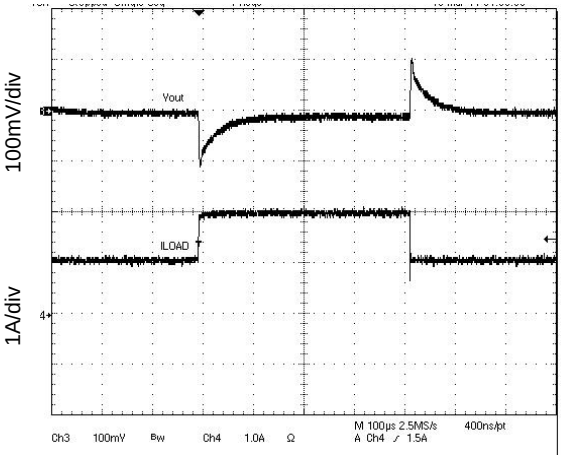

Figure 7. 100mA to 1A Load Step (V_{CC}=12V, V_{OUT}=3.3V)

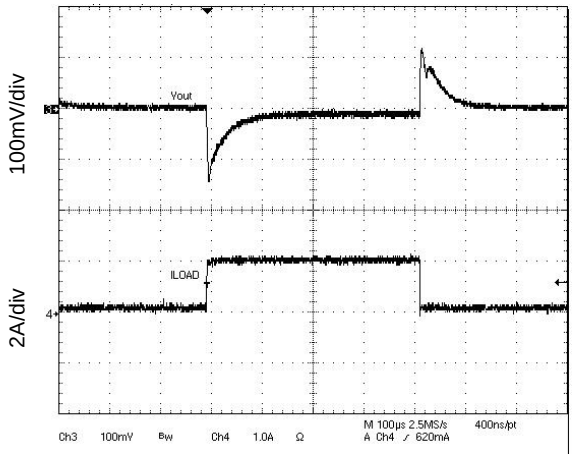

Figure 8. 100mA to 2A Load Step (V_{CC}=12V, V_{OUT}=3.3V)

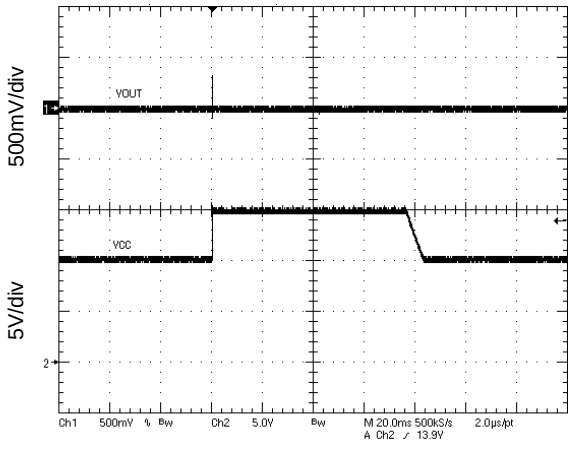

Figure 9. Line Transient Response (VCC=10V to 15V, V_{OUT}=3.3V)

Copyright © 2013, Triune Systems, LLC
TRIUNE SYSTEMS PROPRIETARY & CONFIDENTIAL INFORMATION

TYPICAL PERFORMANCE CHARACTERISTICS

T_J = -40C to 125C, VCC = 12V (unless otherwise noted)

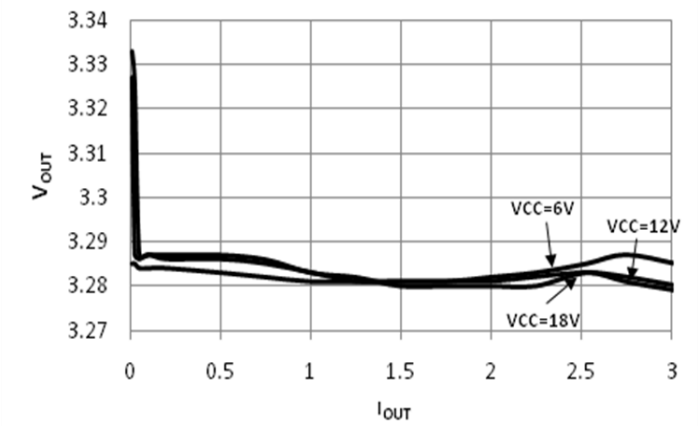

Figure 10. Load Regulation

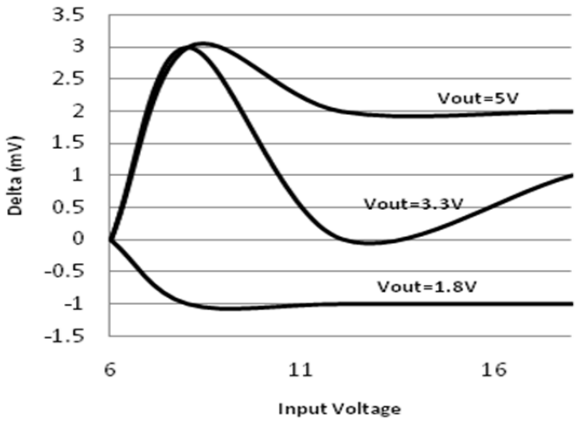

Figure 11. Line Regulation (I_{OUT}=1A)

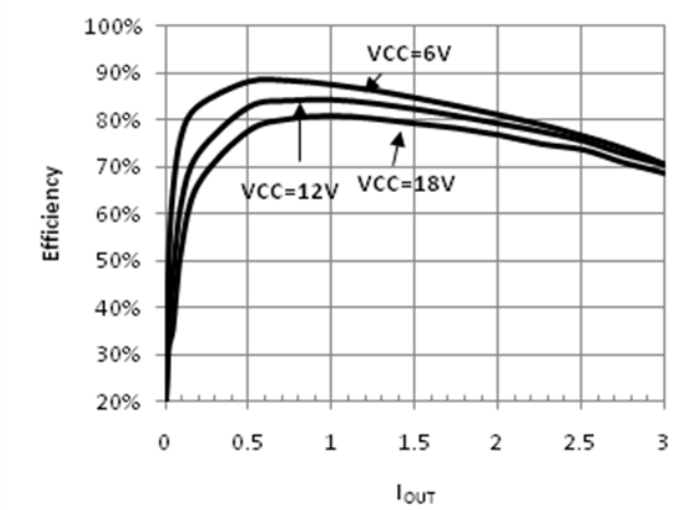

Figure 12. Efficiency vs. Output Current (V_{OUT} = 1.8V)

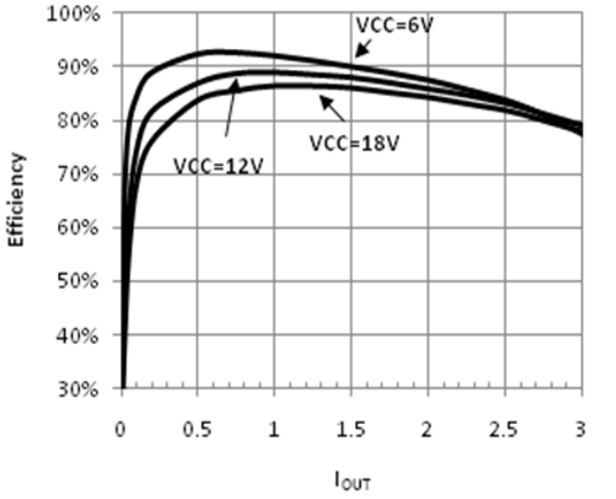

Figure 13. Efficiency vs. Output Current (V_{OUT} = 3.3V)

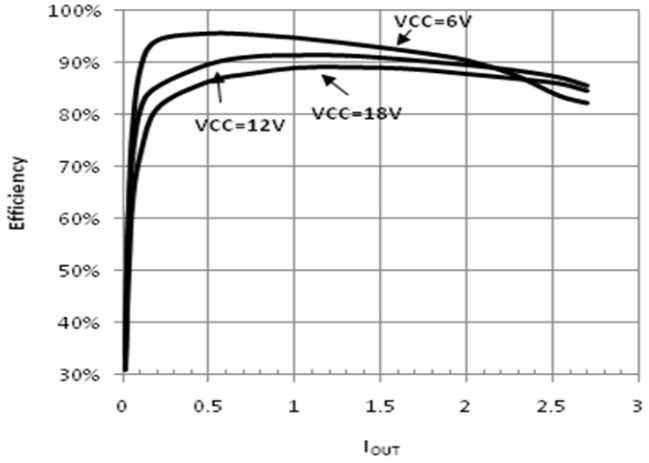

*Figure **14**. Efficiency vs. Output Current (V_{OUT} = 5V)*

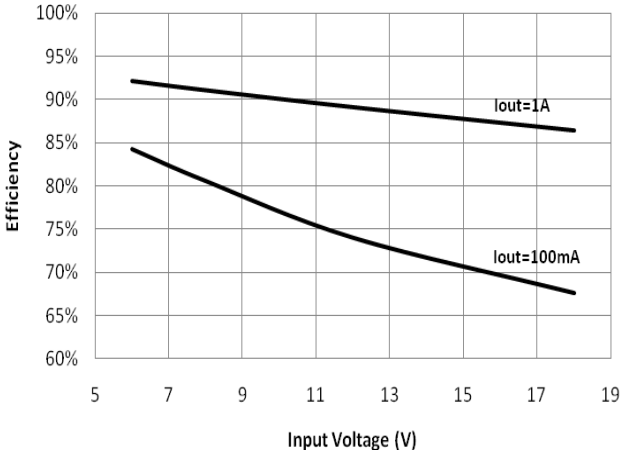

*Figure **15**. Efficiency vs. Input Voltage (V_{OUT} = 3.3V)*

Copyright © 2013, Triune Systems, LLC
TRIUNE SYSTEMS PROPRIETARY & CONFIDENTIAL INFORMATION

TYPICAL PERFORMANCE CHARACTERISTICS

T_J = -40C to 125C, VCC = 12V (unless otherwise noted)

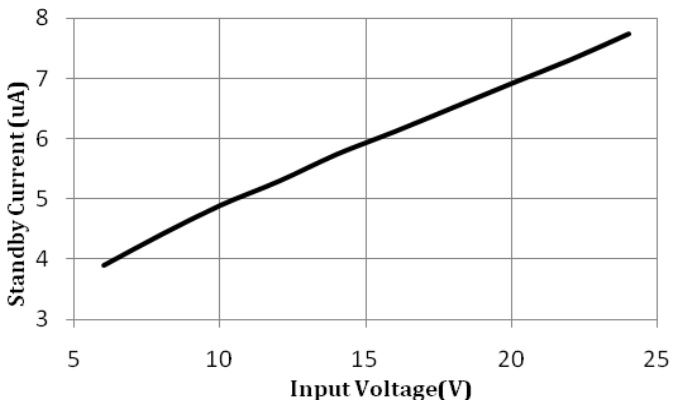

Figure 16. Standby Current vs. Input Voltage

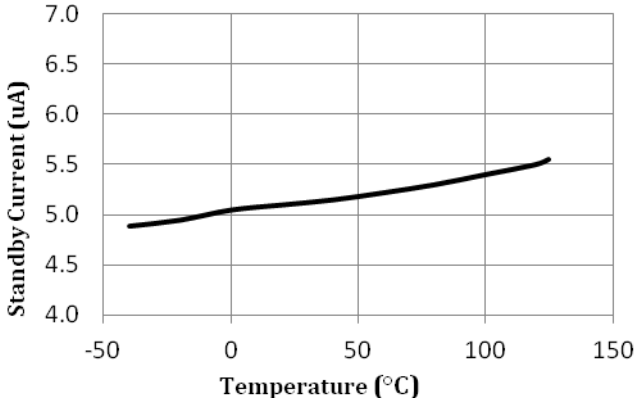

Figure 17. Standby Current vs. Temperature

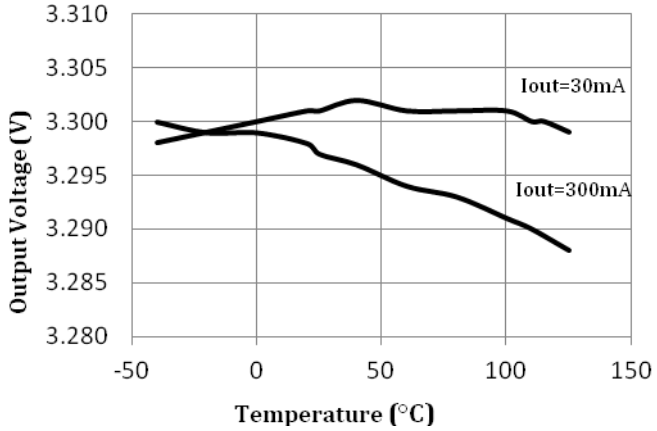

Figure 18. Output Voltage vs. Temperature

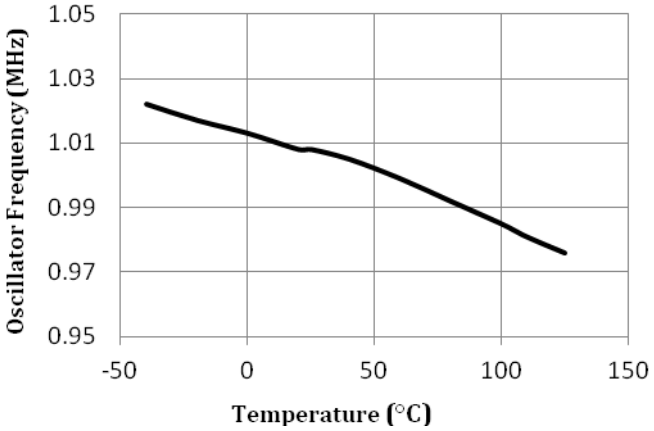

Figure 19. Oscillator Frequency vs. Temperature (Iout=300mA)

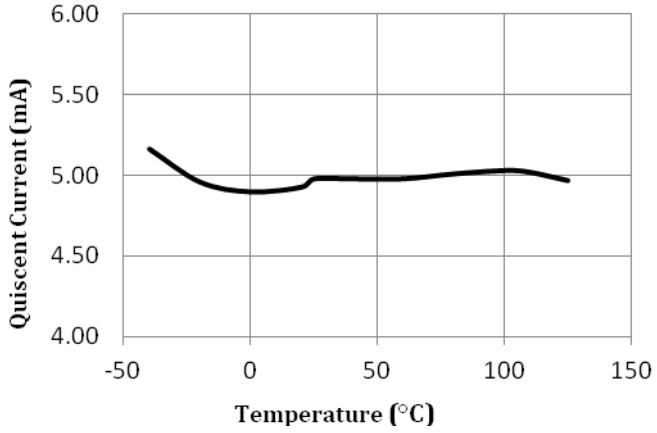

Figure 20. Quiescent Current vs. Temperature (No load)

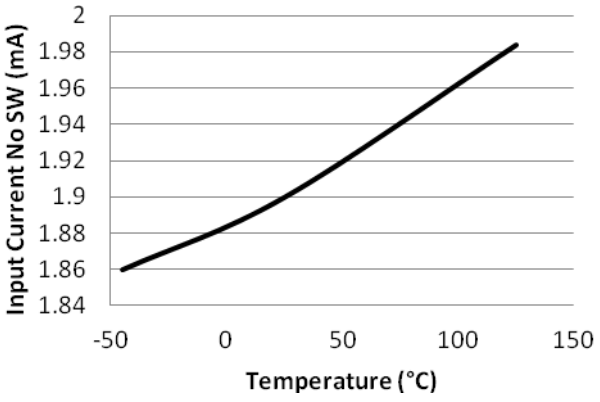

Figure 21. Input Current vs. Temperature (No load, No switching)

Copyright © 2013, Triune Systems, LLC
TRIUNE SYSTEMS PROPRIETARY & CONFIDENTIAL INFORMATION

TYPICAL APPLICATION SCHEMATIC

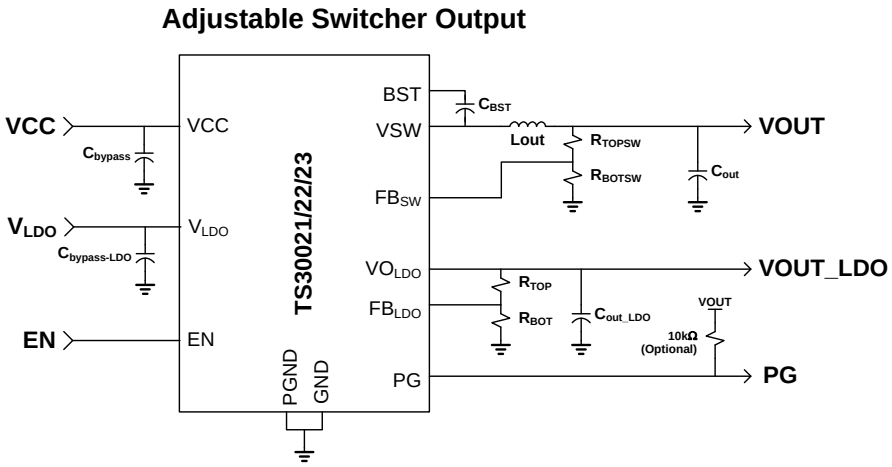

Figure 22: TS30021/22/23 Application Schematic

A minimal schematic suitable for most applications is shown on page 1. Figure 22 includes optional components that may be considered to address specific issues as listed in the External Component Selection section.

PCB LAYOUT

For proper operation and minimum EMI, care must be taken during PCB layout. An improper layout can lead to issues such as poor stability and regulation, noise sensitivity and increased EMI radiation. The main guidelines are the following:

- provide low inductive and resistive paths for loops with high di/dt,
- provide low capacitive paths with respect to all the other nodes for traces with high di/dt,
- sensitive nodes not assigned to power transmission should be referenced to the analog signal ground (GND) and be always separated from the power ground (PGND).

The negative ends of C_{BYPASS}, C_{OUT} and the Schottky diode D_{CATCH} (optional) should be placed close to each other and connected using a wide trace. Vias must be used to connect the PGND node to the ground plane. The PGND node must be placed as close as possible to the TS30021/22/23 PGND pins to avoid additional voltage drop in traces.

The bypass capacitor C_{BYPASS} (optionally paralleled to a 0.1µF capacitor) must be placed close to the VCC pins of TS30021/22/23.

The inductor must be placed close to the VSW pins and connected directly to C_{OUT} in order to minimize the area between the VSW pin, the inductor, the C_{OUT} capacitor and the PGND pins. The trace area and length of the switching nodes VSW and BST should be minimized.

For the adjustable output voltage version of the TS30021/22/23, feedback resistors R_{BOTSW} and R_{TOPSW} are required for Vout settings greater than 0.8V and should be placed close to the TS30021/22/23 in order to keep the traces of the sensitive node FB as short as possible and away from switching signals. R_{BOTSW} should be connected to the analog ground pin (GND) directly and should never be connected to the ground plane. The analog ground trace (GND) should be connected in only one point to the power ground (PGND). A good connection point is under the TS30021/22/23 package to the exposed thermal pad and vias which are connected to PGND. R_{TOPSW} will be connected to the V_{OUT} node using a trace that ends close to the actual load.

Copyright © 2013, Triune Systems, LLC
TRIUNE SYSTEMS PROPRIETARY & CONFIDENTIAL INFORMATION

For fixed output voltage versions of the TS30021/22/23, R_{BOTSW} and R_{TOPSW} are not required and the FB pin should be connected directly to the Vout.

PCB layout for the LDO should follow the same approach and guidelines as given above.

The exposed thermal pad must be soldered to the PCB for mechanical reliability and to achieve good power dissipation. Vias must be placed under the pad to transfer the heat to the ground plane.

EXTERNAL COMPONENT BILL OF MATERIALS

Designator	Function	Description	Suggested Manufacturer	Manufacturer Code	Qty
C_{BYPASS}	Input Supply Bypass Capacitor	10uF 10% 35V	TDK	CGA5L3X5R1V106K160AB	1
$C_{BYPASS-LDO}$	Input Supply Bypass Capacitor	10uF 10% 35V	TDK	CGA5L3X5R1V106K160AB	1
C_{OUT}	Output Filter Capacitor	22uF 10% 10V	TDK	C2012X5R1A226K125AB	1
C_{OUT_LDO}	LDO Output Filter Capacitor	1uF			1
L_{OUT}	Output Filter Inductor (1A)	1.5uH 2A	TDK Wurth		1
L_{OUT}	Output Filter Inductor (2A)	1.5uH 3A	TDK Wurth		1
L_{OUT}	Output Filter Inductor (3A)	1.5uH 4.37A	TDK Wurth		1
C_{BST}	Boost Capacitor	22nF 10V	TDK	C1005X7R1C223K	1
R_{TOPSW} & R_{TOP}	Voltage Feedback Resistor (R_{TOPSW} optional)	17.8K (Note 1)			1
R_{BOTSW} & R_{BOT}	Voltage Feedback Resistor (R_{BOTSW} optional)	10K (Note 1)			1
R_{PLP}	PG Pin Pull-up Resistor (optional)	10K			1
D_{CATCH}	Catch Diode (optional, 1A)	30V 2A SOD-123FL	On Semiconductor	MBR230LSFT1G	1
D_{CATCH}	Catch Diode (optional, 2A)	40V 3A SOD-123	NXP Semiconductors	PMEG4030ER,115	1
D_{CATCH}	Catch Diode (optional, 3A)	40V 5A SOD-123FL	NXP Semiconductors	PMEG4050EP,1	1

Note 1: The voltage divider resistor values are calculated for an output voltage of 2.5V. For fixed output versions, the FB pin is connected directly to V_{OUT}.

EXTERNAL COMPONENT SELECTION

The 2MHz internal switching frequency of the TS30021/22/23 facilitates low cost LC filter combinations. Additionally, the fixed output versions enable a minimum external component count to provide a complete regulation solution with only 4 external components: an input bypass capacitor, an inductor, an output capacitor, and the bootstrap capacitor. The internal compensation is optimized for a 22uF output capacitor and a 1.5uH inductor.

Copyright © 2013, Triune Systems, LLC
TRIUNE SYSTEMS PROPRIETARY & CONFIDENTIAL INFORMATION

For best performance, a low ESR ceramic capacitor should be used for C_{BYPASS}. If C_{BYPASS} is not a low ESR ceramic capacitor, a 0.1uF ceramic capacitor should be added in parallel to C_{BYPASS}.

The minimum allowable value for the output capacitor is 22uF. To keep the output ripple low, a low ESR (less than 35mOhm) ceramic is recommended. Multiple capacitors can be paralleled to reduce the ESR.

The inductor range is 1.5uH +/-20%. For optimal over-current protection, the inductor should be able to handle up to the regulator current limit without saturation. Otherwise, an inductor with a saturation current rating higher than the maximum I_{OUT} load requirement plus the inductor current ripple should be used.

For high current modes, the optional Schottky diode will improve the overall efficiency and reduce the heat. It is up to the user to determine the cost/benefit of adding this additional component in the user's application. The diode is typically not needed.

For the adjustable output version of the TS30021/22/23, the SMPS output voltage can be adjusted by sizing R_{TOPSW} and R_{BOTSW} feedback resistors. The equation for the output voltage is $V_{OUT} = 0.8\ (1 + R_{TOPSW}/R_{BOTSW})$.

For the adjustable version, the ratio of VCC/Vout cannot exceed 16.

R_{PUP} is only required when the Power Good signal (PG) is utilized.

THERMAL INFORMATION

TS30021/22/23 is designed for a maximum operating junction temperature T_j of 125°C. The maximum output power is limited by the power losses that can be dissipated over the thermal resistance given by the package and the PCB structures. The PCB must provide heat sinking to keep the TS30021/22/23 cool. The exposed metal on the bottom of the QFN package must be soldered to a ground plane. This ground should be tied to other copper layers below with thermal vias. Adding more copper to the top and the bottom layers and tying this copper to the internal planes with vias can reduce thermal resistance further. For a hi-K JEDEC board and 13.5 square inch of 1 oz Cu, the thermal resistance from junction to ambient can be reduced to θ_{JA} = 38°C/W. The power dissipation of other power components (catch diode, inductor) cause additional copper heating and can further increase what the TS30021/22/23 sees as ambient temperature.

Copyright © 2013, Triune Systems, LLC
TRIUNE SYSTEMS PROPRIETARY & CONFIDENTIAL INFORMATION

PACKAGE MECHANICAL DRAWINGS (all dimensions in mm)

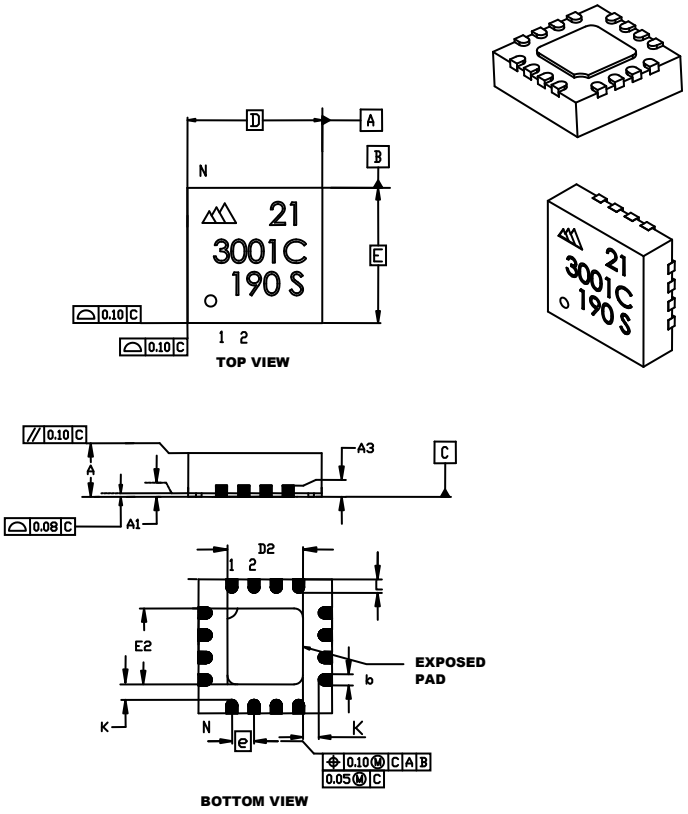

Units		MILLIMETERS		
Dimensions Limits		MIN	NOM	MAX
Number of Pins	N		16	
Pitch	e		0.50 BSC	
Overall Height	A	0.80	0.90	1.00
Standoff	A1	0.00	0.02	0.05
Contact Thickness	A3		0.20 REF	
Overall Length	D		3.00 BSC	
Exposed Pad Width	E2	1.55	1.70	1.80
Overall Width	E		3.00 BSC	
Exposed Pad Length	D2	1.55	1.70	1.80
Contact Width	b	0.20	0.25	0.30
Contact Length	L	0.20	0.30	0.40
Contact-to-Exposed Pad	K	0.20	-	-

Copyright © 2013, Triune Systems, LLC
TRIUNE SYSTEMS PROPRIETARY & CONFIDENTIAL INFORMATION

RECOMMEDED PCB LAND PATTERN

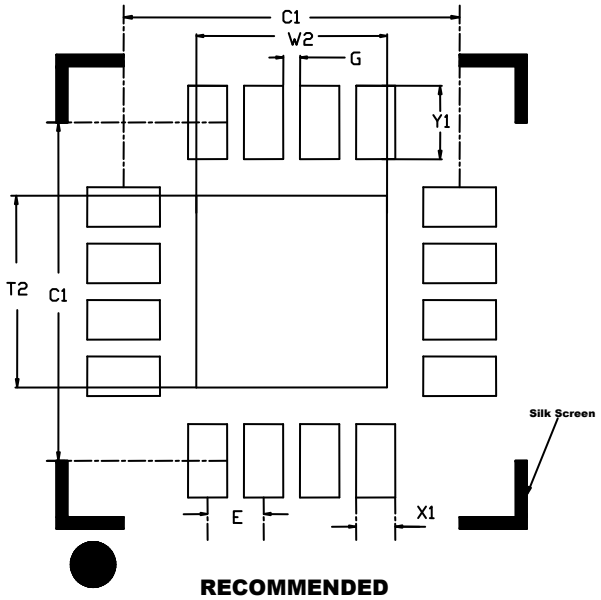

RECOMMENDED LAND PATTERN

DIMENSIONS IN MILLIMETERS

Units		MILLIMETERS		
Dimension Limits		MIN	NOM	MAX
Contact Pitch	E		0.50 BSC	
Optional Center Pad Width	W2	-	-	1.70
Optional Center Pad Length	T2	-	-	1.70
Contact Pad Spacing	C1	-	3.00	-
Contact Pad Spacing	C2	-	3.00	-
Contact Pad Width (X16)	X1	-	-	0.35
Contact Pad Length (X16)	Y1	-	-	0.65
Distance Between Pads	G	0.15	-	-

Notes:
Dimensions and tolerances per ASME Y14.5M.
BSC: Basic Dimension. Theoretically exact values shown without tolerances.
REF: Reference Dimension, usually without tolerance, for information only.

PACAKGING INFORMATION

Pb-Free (RoHS): The TS30021/22/23 devices are fully compliant for all materials covered by European Union Directive 2002/95/EC, and meet all IPC-1752 Level 3 materials declaration requirements.

MSL, Peak Temp: The TS30021/22/23 family has a Moisture Sensitivity Level (MSL) 1 rating per JEDEC J-STD-020D. These devices also have a Peak Profile Solder Temperature (Tp) of 260°C.

Copyright © 2013, Triune Systems, LLC
TRIUNE SYSTEMS PROPRIETARY & CONFIDENTIAL INFORMATION

ORDERING INFORMATION

TS3002x-MvvvQFNR

x	Output Current
1	1 Amp
2	2 Amp
3	3 Amp

vvv	Output Voltage
015	1.5 V
018	1.8 V
025	2.5 V
033	3.3 V
050	5.0 V
000	Adjustable

Copyright © 2013, Triune Systems, LLC
TRIUNE SYSTEMS PROPRIETARY & CONFIDENTIAL INFORMATION

Legal Notices

Information contained in this publication regarding device applications and the like is provided only for your convenience and may be superseded by updates. It is your responsibility to ensure that your application meets with your specifications. "Typical" parameters which may be provided in Triune Systems data sheets and/or specifications can and do vary in different applications and actual performance may vary over time. All operating parameters, including "Typicals" must be validated for your application by your technical experts. TRIUNE SYSTEMS MAKES NO REPRESENTATIONS OR WARRANTIES OF ANY KIND WHETHER EXPRESS OR IMPLIED, WRITTEN OR ORAL, STATUTORY OR OTHERWISE, RELATED TO THE INFORMATION, INCLUDING BUT NOT LIMITED TO ITS CONDITION, QUALITY, PERFORMANCE, MERCHANTABILITY OR FITNESS FOR PURPOSE. Triune Systems disclaims all liability arising from this information and its use. Triune System products are not designed, intended, or authorized for use as components in systems intended for surgical implant into the body, or other applications intended to support or sustain life, or for any other application in which the failure of the Triune Systems product could create a situation where personal injury or death may occur. Should the Buyer purchase or use Triune Systems products for any such unintended or unauthorized application, the Buyer shall indemnify and hold Triune Systems, and its officers, employees, subsidiaries, affiliates, and distributors harmless against all claims, costs, damages, and expenses, and reasonable attorney fees arising out of, directly or indirectly, any claim of personal injury or death associated with such unintended or unauthorized use, even if such claim alleges that Triune Systems was negligent regarding the design or manufacture of the part. No licenses are conveyed, implicitly or otherwise, under any Triune Systems intellectual property rights.

Trademarks

The Triune Systems® name and logo, MPPT-lite™, and nanoSmart® are trademarks of Triune Systems, LLC. in the U.S.A..

All other trademarks mentioned herein are property of their respective companies.

© 2013 Triune Systems, LLC. All Rights Reserved.