TRSL-8380WG (RoHS Compliant)

3.3V / 1550 nm / 4.25 Gbps Digital Diagnostic LC SFP SINGLE-MODE TRANSCEIVER

FEATURES

- Up to 4.25 Gbps Bi-directional Data Links
- Duplex LC Single Mode Transceiver
- Fibre Channel FC-PI 400/200/100-SM-LC-L Compliant
- IEEE 802.3z 1000BASE-LX Compliant
- Small Form-Factor, RJ-45 size, 2×7 pin Package
- SFF-8472 Digital Diagnostic Function
- 1550 nm DFB LD Transmitter
- 26 dB Power Budget at Least
- AC/AC Coupling according to MSA
- Up to 80 km Transmission
- LVTTL Transmitter Disable Input
- LVTTL Signal Detect Output
- Single +3.3 V Power Supply
- RoHS Compliant
- 0 to 70°C Operating
- Class 1 Laser International Safety Standard IEC-60825 Compliant

APPLICATIONS

- Tri-rate 1.063/2.125/4.25 Gb/s Fibre Channel
- 1.25 Gb/s 1000 BASE-LX Ethernet

DESCRIPTION

The TRSL-8380WG series single mode transceiver is small form factor, low power, high performance module for bi-directional serial optical data communications such as 4x/2x/1x Fibre Channel and 1000BASE-LX Ethernet. This 2×7 pin SFF transceiver comply with the 2×5 standard package defined by the SFF MSA with the exception of four extra pins for real-time digital diagnostics and transmitter fault indication. Digital diagnostic functions are available via the 2-wire serial interface defined in the SFF-8472 MSA. This module is designed for single mode fiber and operates at a nominal wavelength of 1550 nm. The transmitter section uses a 1550 nm multiple quantum well DFB laser and is a class 1 laser compliant according to International Safety Standard IEC-60825. The receiver section uses an integrated InGaAs detector preamplifier (IDP) mounted in an optical header and a limiting post-amplifier IC.

LASER SAFETY

This single mode transceiver is a Class 1 laser product. It complies with IEC-60825 and FDA 21 CFR 1040.10 and 1040.11. The transceiver must be operated within the specified temperature and voltage limits. The optical ports of the module shall be terminated with an optical connector or with a dust plug.

ORDER INFORMATION

P/No.	Bit Rate (Gb/s)	FC-PI	Distance (km)	Wavelength (nm)	Package	Temp. (°C)	TX Power (dBm)	RX Sens. (dBm)	RoHS Compliant
TRSL-8380WG	4 / 2 / 1	400/200/100	40	1550 DFB	2×7 LC with DMI	0 to 70	4 to 0	-26	Yes

Absolute Maximum Ratings

Parameter	Symbol	Min	Max	Units	Notes
Storage Temperature	Tstg	-40	85	°C	
Operating Case Temperature	Topr	0	70	°C	
Soldering Temperature	---		260	°C	10 seconds on leads only
Power Supply Voltage	Vcc	-0.5	3.6	V	
Input Voltage	---	GND	Vcc	V	
Output Current	Iout	0	30	mA	

Recommended Operating Conditions

Parameter	Symbol	Min	Typ	Max	Units / Notes
Power Supply Voltage	Vcc	3.13	3.3	3.47	V
Operating Case Temperature	Topr	0		70	°C
Power Supply Current	$I_{CC\,(TX+RX)}$		200	300	mA
Data Rate		1.0625		4.25	Gb/s

OPTOWAY TECHNOLOGY INC. No.38, Kuang Fu S. Road, Hu Kou, Hsin Chu Industrial Park, Hsin Chu, Taiwan 303
Tel: 886-3-5979798 Fax: 886-3-5979737
E-mail: sales@optoway.com.tw http: // www.optoway.com.tw 3/5/2007 V1.0

Transmitter Specifications (0°C < Topr < 70°C, 3.13 < Vcc < 3.47						
Parameter	**Symbol**	**Min**	**Typ**	**Max**	**Units**	**Notes**
Optical						
Optical Transmit Power	Po	0	---	4	dBm	1
Optical Modulation Amplitude@4.25Gb/s	OMA	1200	---	---	μW	
Output Center Wavelength	λ	1480	1550	1580	nm	
Output Spectrum Width	Δλ	---		1	nm	-20 dB Width
Side Mode Suppression Ratio	SMRS	30			dB	
Optical Rise / Fall Time (4.25Gb/s)	t_r / t_f			90	ps	20 % to 80%,unfiltered
Relative Intensity Noise	RIN			-118	dB/Hz	
Electrical						
Data Input Current – Low	I_{IL}	-350			μA	
Data Input Current – High	I_{IH}			350	μA	
Differential Input Voltage	V_{IH} - V_{IL}	0.5		2.4	V	Peak-to-Peak
TX Disable Input Voltage – Low	$T_{DIS, L}$	0		0.5	V	2
TX Disable Input Voltage – High	$T_{DIS, H}$	2.0		Vcc	V	2
TX Disable Assert Time	T_{ASSERT}			10	μs	
TX Disable Deassert Time	$T_{DEASSERT}$			1	ms	
TX Fault Output Voltage -- Low	T_{FaultL}	0		0.5	V	3
TX Fault Output Voltage -- High	T_{FaultH}	2.0		Vcc+0.3	V	3

1. Output power is power coupled into a 9/125 μm single mode fiber.
2 There is an internal 4.7K to 10K ohm pull-up resistor to VccTX.
3 Open collector compatible, 4.7K to 10K ohm pull-up to Vcc (Host Supply Voltage).

Receiver Specifications (0°C < Topr < 70°C, 3.13 < Vcc < 3.47						
Parameter	**Symbol**	**Min**	**Typ**	**Max**	**Units**	**Notes**
Optical						
Sensitivity @4.25Gb/s	Sens1			3.2 -26	μW dBm	4 5
Maximum Input Power	Pin	-9			dBm	
Signal Detect -- Asserted	Pa	---		-26	dBm	Transition: low to high
Signal Detect -- Deasserted	Pd	-40	---	---	dBm	Transition: high to low
Signal detect -- Hysteresis		1.0	---		dB	
Wavelength of Operation		1260	---	1600	nm	
Electrical						
Differential Output Voltage	V_{OH} – V_{OL}	0.6		2.0	V	
Output LOS Voltage -- Low	V_{OL}	0		0.5	V	6
Output LOS Voltage -- High	V_{OH}	2.0		Vcc+0.3	V	6

4 Measured at PRBS 2^7-1 at BER 1E-12.
5 Represents sensitivity based on OMA spec, as corrected to incoming Extinction Ratio of 9 dB. For example, an OMA of 3.2 μW is approximately equal to an average power of -26.8 dBm, average with an Extinction ratio of 9 dB.
6 Open collector compatible, 4.7K to 10K ohm pull-up to Vcc (Host Supply Voltage).

CONNECTION DIAGRAM

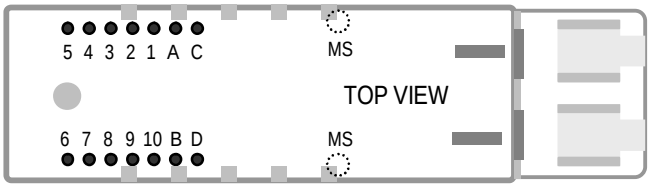

PIN	Signal Name	Description	PIN	Signal Name	Description
C	N/C	Not Connected	D	TX_Fault	Transmitter Fault Indication
A	SDA	Data line of two wire serial interface	B	SCL	Clock line of two wire serial interface
1	VeeRx	Rreceiver ground	10	TD-	Transmitter Data In Bar
2	VccRx	Receiver Power – 3.3V±5%	9	TD+	Transmitter Data In
3	SD	Signal Detect Output	8	TX_Disable	Logic low to enable TXoutput
4	RD-	Receiver Data Out Bar	7	VeeTx	Transmitter ground
5	RD+	Receiver Data Out	6	VccTx	Transmitter Power – 3.3V±5%
MS	MS	Mounting Studs. Connect to Chassis Ground			

Module Definition

Module Definition	MOD-DEF2 PIN A	MOD-DEF1 PIN B	MOD-DEF0	Interpretation by Host
4	SDA	SCL		Serial module definition protocol

Module Definition 4 specifies a serial definition protocol. For this definition, upon power up, MOD-DEF(1:2) appear as no connector (NC) and MOD-DEF(0) is TTL LOW. When the host system detects this condition, it activates the serial protocol. The protocol uses the 2-wire serial CMOS E^2PROM protocol of the ATMEL AT24C01A/02/04 family of components.

RECOMMENDED CIRCUIT SCHEMATIC

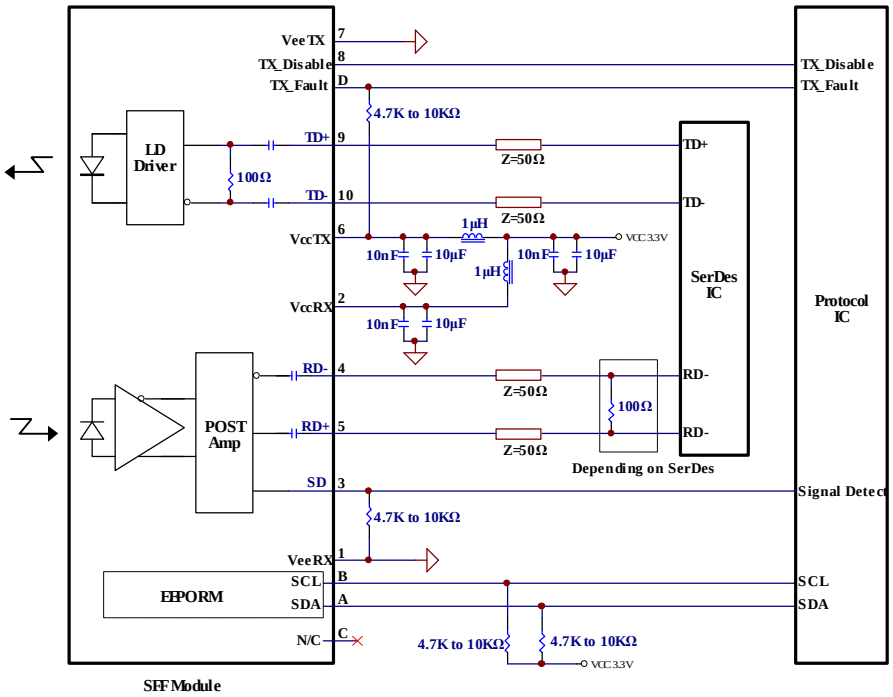

PACKAGE DIAGRAM (Units in mm)

A) Standard Case

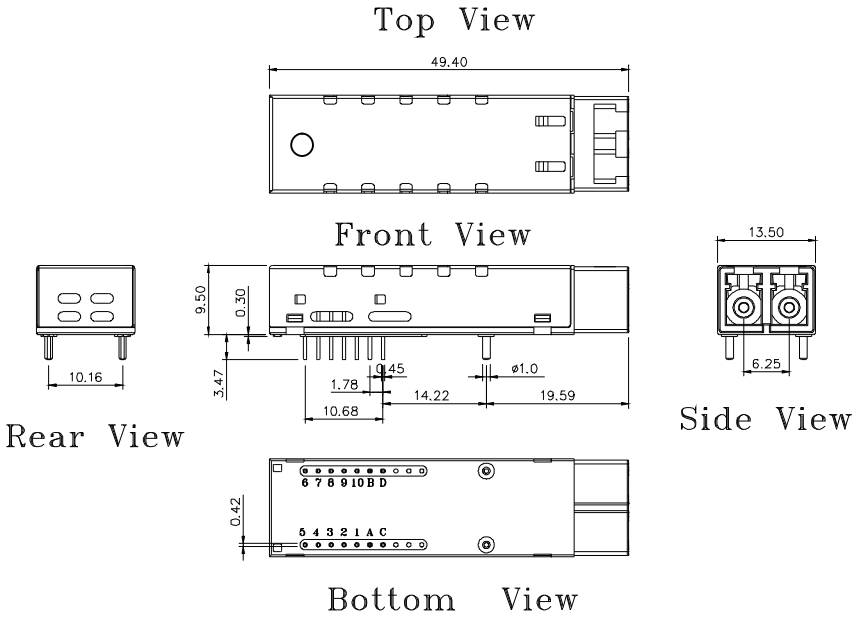

TRSL-8380WG

B) Extended Case

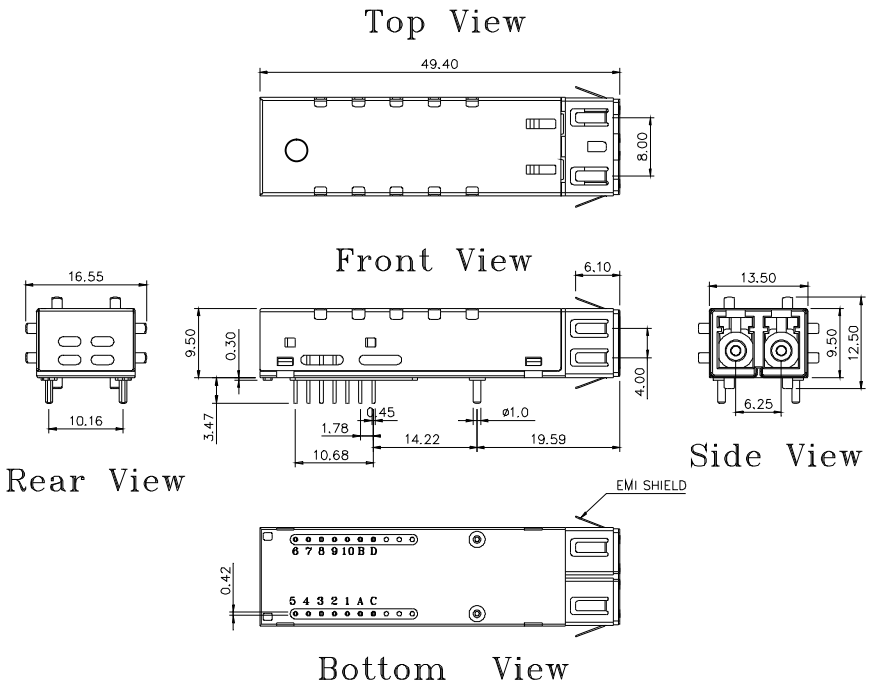

TRSL-8380WEG

Note: Specifications subject to change without notice.