TRSL-5380WG / TRSL-5380AWG

3.3V / 1550 nm / 622 Mbps RoHS Complaint SFF LC 2X10 SINGLE-MODE TRANSCEIVER

FEATURES

- Duplex LC Single Mode Transceiver
- SONET OC-12 LR-2 / SDH STM-4 (L-4.2) Compliant
- Small Form Factor, RJ-45 size, 2X10 pin Package
- 1550 nm DFB LD Transmitter
- 26 dB Link Budget at Least
- Analog Monitor Function
  -- Transmitter Laser Bias Current
  -- Transmitter Laser Optical Power Monitor
  -- Receiver Photo Detector Current
- LVPECL Signal Input / Output
- LVTTL Transmitter Disable Input
- LVTTL Signal Detection Output
- Single +3.3 V Power Supply
- RoHS Complaint
- 0 to 70°C Operating: TRSL-5380WG
- -20 to 85°C Operating: TRSL-5380AWG
- Wave Solderable and Aqueous Washable
- Class 1 Laser International Safety Standard IEC 60825 Compliant

APPLICATIONS

- ATM 622 Mbps Links
- SONET/SDH Equipment Interconnect
- Fiber Channel 533 Mb/s Links

DESCRIPTION

The TRSL-5380WG series single mode transceivers is small form factor, low power, high performance module for bi-directional serial optical data communications such as SONET OC-12 LR-2 / SDH STM-4 (L-4.2) and Fast Ethernet. This module is designed for single mode fiber and operates at a nominal wavelength of 1550 nm. A guaranteed minimum optical link budget of 26 dB is offered which can correspond to a link distance of over 80 km (assuming worst case fiber loss of 0.25 dB/km). The transmitter section uses a 1550 nm multiple quantum well DFB laser and is a class 1 laser compliant according to International Safety Standard IEC-60825. The receiver section uses an integrated InGaAs detector preamplifier (IDP) mounted in an optical header and a limiting post-amplifier IC. A PECL logic interface simplifies interface to external circuitry.

LASER SAFETY

This single mode transceiver is a Class 1 laser product. It complies with IEC 60825 and FDA 21 CFR 1040.10 and 1040.11. The transceiver must be operated within the specified temperature and voltage limits. The optical ports of the module shall be terminated with an optical connector or with a dust plug.

ORDER INFORMATION

P/No.	Bit Rate (Mb/s)	SONET /SDH	Distance (km)	Wavelength (nm)	Package	Temp. (°C)	TX Power (dBm)	RX Sens. (dBm)	RoHS Compliant
TRSL-5380WG	622	LR-2/L-4.2	80	1550 DFB	2X10 LC	0 to 70	2 to -3	-29	Yes
TRSL-5380AWG	622	LR-2/L-4.2	80	1550 DFB	2X10 LC	-20 to 85	2 to -3	-29	Yes

Absolute Maximum Ratings

Parameter	Symbol	Min	Max	Units	Notes
Storage Temperature	Tstg	-40	85	°C	
Operating Temperature	Topr	0 -20	70 85	°C	TRSL-5380WG TRSL-5380AWG/air flow 1m/sec
Soldering Temperature	---		260	°C	10 seconds on leads only
Power Supply Voltage	Vcc	0	4.5	V	
Input Voltage	---	GND	Vcc	V	
Output Current	Iout	0	30	mA	

Recommended Operating Conditions

Parameter	Symbol	Min	Typ	Max	Units / Notes
Power Supply Voltage	Vcc	3.13	3.3	3.47	V
Operating Temperature	Topr	0 -20		70 85	°C / TRSL-5380WG °C / TRSL-5380AWG/air flow 1m/sec
Data Rate		50	622		Mb/s
Power Supply Current	Icc			280	mA

OPTOWAY TECHNOLOGY INC. No.38, Kuang Fu S. Road, Hu Kou, Hsin Chu Industrial Park, Hsin Chu, Taiwan 303
Tel: 886-3-5979798 Fax: 886-3-5979737
E-mail: sales@optoway.com.tw http: // www.optoway.com.tw

Transmitter Specifications (0^oC < Topr < 70^oC, 3.13V < Vcc < 3. 47V)						
Parameter	**Symbol**	**Min**	**Typ**	**Max**	**Units**	**Notes**
Optical						
Optical Transmit Power	Po	-3	---	2	dBm	1
Output Center Wavelength	λ	1480	1550	1580	nm	
Output Spectrum Width	Δλ	---	---	1	nm	-20 dB Width
Side Mode Suppression Ratio	SMSR	30			dB	
Extinction Ratio	E_R	10	---	---	dB	
Output Eye	Compliant with Bellcore GR-253-CORE and ITU recommendation G.957					
Optical Rise Time	t_r			1.2	ns	10% to 90% Values
Optical Fall Time	t_f			1.2	ns	10% to 90% Values
Relative Intensity Noise	RIN			-120	dB/Hz	
Total Jitter	TJ			0.55	ns	2
Electrical						
Data Input Current – Low	I_{IL}	-350			μA	
Data Input Current – High	I_{IH}			350	μA	
Differential Input Voltage	V_{IH} - V_{IL}	300			mV	
Data Input Voltage – Low	V_{IL} - V_{CC}	-2.0		-1.58	V	3
Data Input Voltage -- High	V_{IH} - V_{CC}	-1.1		-0.74	V	3
Disable Input Voltage -- Low	$V_{TDIS,L}$	0		0.5	V	TX Output Enabled
Disable Input Voltage -- High	$V_{TDIS,H}$	Vcc – 1.3		Vcc	V	TX Ouput Disabled
Shut Off Time for TxDis	t_{DIS}			1	ms	

Notes: 1. Output power is power coupled into a 9/125 μm single mode fiber.
2. Measured with a 2^{23}-1 PRBS with 72 ones and 72 zeros.
3. These inputs are compatible with 10K, 10KH and 100K ECL and PECL inputs.

Receiver Specifications (0^oC < Topr < 70^oC, 3.13V < Vcc < 3. 47V)						
Parameter	**Symbol**	**Min**	**Typ**	**Max**	**Units**	**Notes**
Optical						
Sensitivity	---	---	---	-29	dBm	1
Maximum Input Power	Pin	-5		---	dBm	
Signal Detect -- Asserted	Pa	---	---	-29	dBm	Transition: low to high
Signal Detect -- Deasserted	Pd	-43	---	---	dBm	Transition: high to low
Signal detect -- Hysteresis		1.0	---		dB	
Wavelength of Operation		1100	---	1600	nm	
Electrical						
Data Output Voltage – Low	V_{OL} - V_{CC}	-2.0		-1.58	V	2
Data Output Voltage – High	V_{OH} - V_{CC}	-1.1		-0.74	V	2
Signal Detect Output Voltage -- Low	V_{OL}			0.8	V	
Signal Detect Output Voltage -- High	V_{OH}	2.0			V	

Notes: 1. Minimum sensitivity and saturation levels at BER=1E-10 for a 2^{23}-1 PRBS with 72 ones and 72 zeros.
2. These outputs are compatible with 10K, 10KH and 100K ECL and PECL outputs.

ANALOG DIAGNOSTICS FUNCTIONS

Parameter	Symbol	Min	Typ	Max	Units	Notes
Transmitter						
Laser Bias Current Monitor	Bmon+, Bmon-	0		Vcc	V	1
Monitor Photodiode Current Monitor	Pmon+,Pmon-	0		Vcc	V	2
Receiver						
Received Photocurrent	Rpd	0		1	mA	3
Photodiode Responsivity	R	0.5	0.9	1.0	A/W	
Applied Voltage at VpdR pin	Vpd	2.4		Vcc	V	3

Notes: 1. PIN 17 and 18 provide an analog voltage output proportional to the laser bias current, based on the following formula: Ibias = V (Bmon+ - Bmon-) / 10 Ω. See below the equivalent circuit.

2. PIN 19 and 20 provide an analog voltage output proportional to the monitor photodiode current, based on the following formula: Imon = V (Pmon+ - Pon-) / 200Ω. See below the equivalent circuit.

3. PIN 1 is used to monitor the received photocurrent. It must be connected to a positive voltage within the specified above. The received power is given by the photocurrent multiplied by the photodiode responsivity.

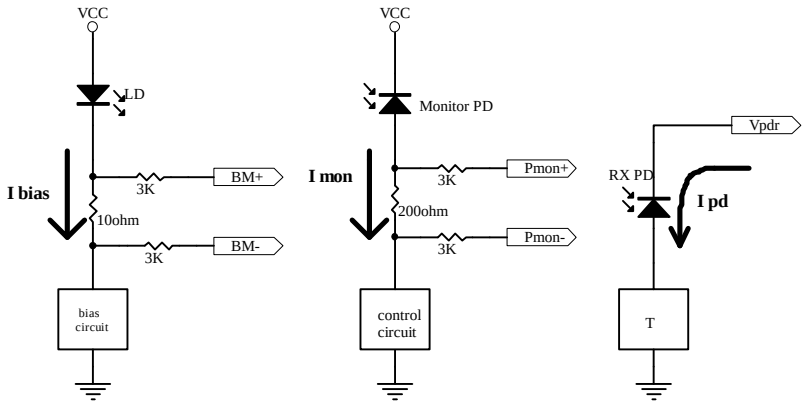

Analog Monitoring Function Connections

CONNECTION DIAGRAM

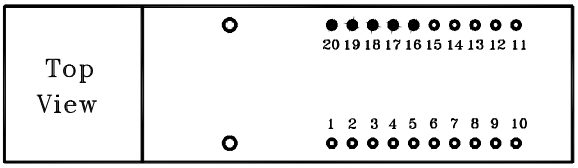

PIN	Symbol	Notes	PIN	Symbol	Notes
1	VpdR	Receiver power monitor. This pin must be connected to a positive power supply (Vcc), preferably via a small resistor. Supplier photocurrent and maybe used to monitor receiver power.	11	VccT	+3.3V dc transmitter power supply
2	VeeR	Receiver ground.	12	VeeT	Transmitter ground.
3	VeeR	Receiver ground.	13	T Dis	Transmitter Disable. Connect this pin to logic "1" to disable module. To enable module connect to logic low "0"
4	NC	No connected	14	TD +	Transmitter Data In
5	NC	No connected	15	TD –	Transmitter Data In Bar
6	VeeR	Receiver ground.	16	VeeT	Transmitter ground.
7	VccR	+3.3V dc receiver power supply	17	Bmon–	Laser Bias Monitoring – Negative End
8	SD	Signal detect. Logic 1 indicate a normal operation.	18	Bmon+	Laser Bias Monitoring – Positive End (Bmon+ - Bmon-) = 10 Ω X laser bias current
9	RD–	Receiver Dataout Bar	19	Pmon-	Laser Power Monitoring -- Negative end
10	RD+	Receiver Dataout	20	Pmon+	Laser Power Monitoring -- Positive end (Pmon+ - Pmon-) = 200 Ω X monitor photdiode current
MS	MS	Mounting Studs. Connect to Chassis Ground			

RECOMMENDED CIRCUIT SCHEMATIC

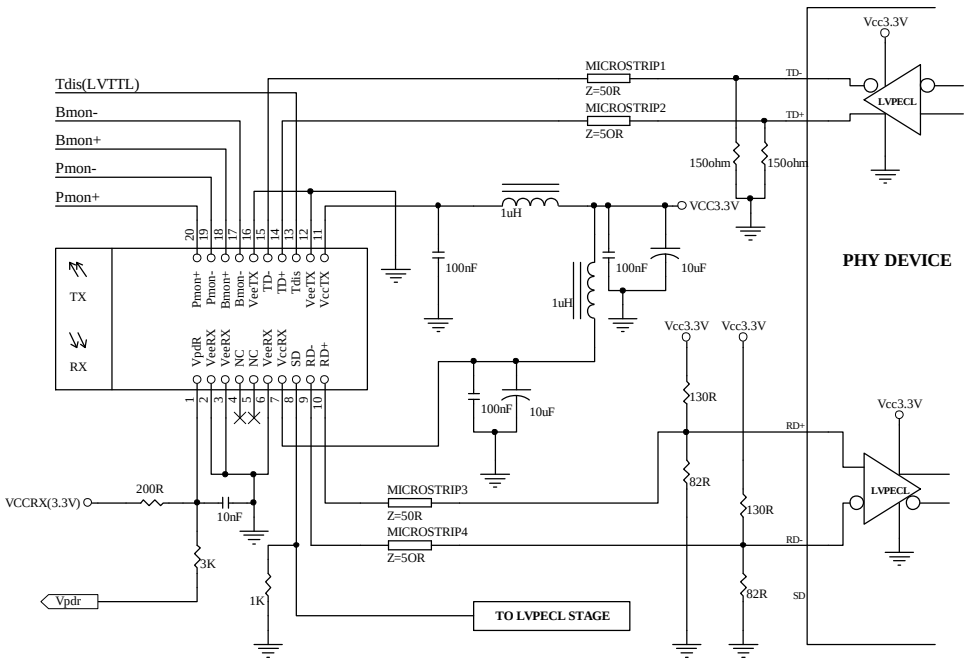

Note: 1. TX input is terminated inside the module.
2. Veer and Veet are not internally connected to each other.
3. 50 Ω line pattern and component placements on TD+/TD- and RD+/RD- lines shall be symmetrical for better impedance matching.

PACKAGE DIAGRAM

Units in mm

1) Standard Case

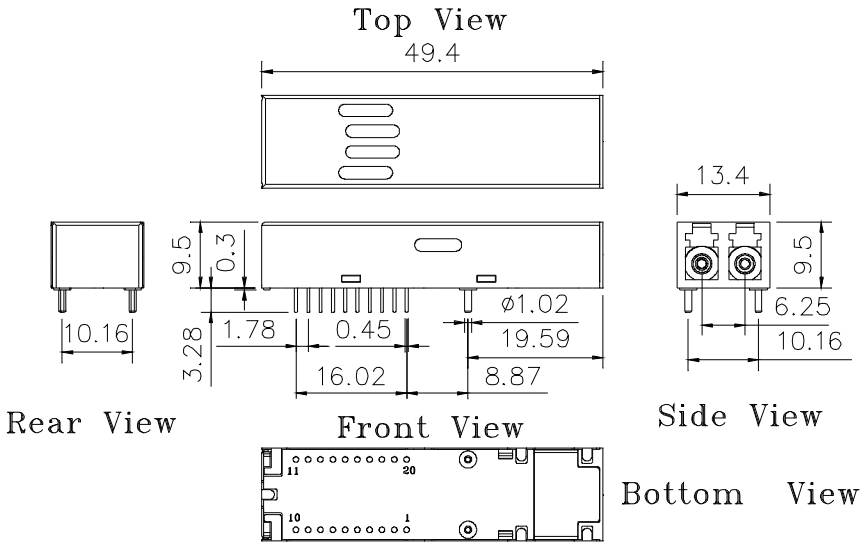

TRSL-5380WG / TRSL-5380AWG

2) Extended Case

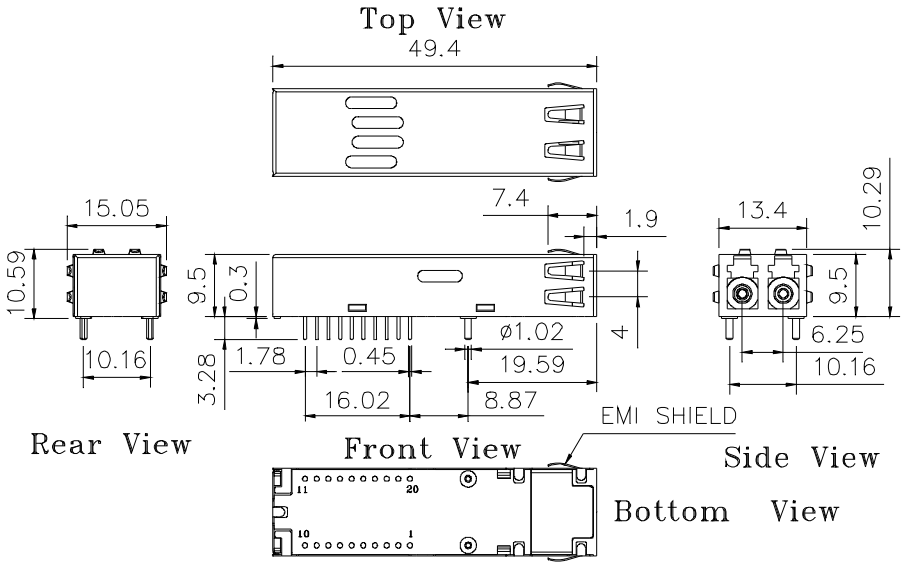

TRSL-5380WEG / TRSL-5380AWEG

Note: Specifications subject to change without notice.