TRS-5340G / TRS-5340TG / TRS-5340FG / TRS-5340CG / TRS-5340CTG / TRS-5340CFG

3.3V / 1550 nm / 622 Mbps RoHS Compliant Optical Single-Mode Transceiver

FEATURES

- Duplex SC Single Mode Transceiver: TRS-5340G
- Duplex ST Single Mode Transceiver: TRS-5340TG
- Duplex FC Single Mode Transceiver: TRS-5340FG
- 1550 nm DFB LD Transmitter
- Industry Standard 1 x 9 Footprint
- Single +3.3 V Power Supply
- RoHS Compliant
- PECL Signal Detection Output: TRS-5340G
- TTL Signal Detection Output: TRS-5340CG
- 0 to 70°C Operation: TRS-5340G
- -20 to 85°C Operation: TRS-5340AG
- LED Multisourced 1 x 9 Transceiver Interchangeable
- Wave Solderable and Aqueous Washable
- Class 1 Laser International Safety Standard IEC-60825 Compliant

APPLICATIONS

- ATM 622 Mbps Links
- SONET/SDH Equipment Interconnect
- Fiber Channel 532 Mbps Links

DESCRIPTION

The TRS-5340G series single mode transceivers is low power, high performance module for bi-directional serial optical data communications such as SONET OC-12 / SDH STM-4. This module is designed for single mode fiber and operates at a nominal wavelength of 1550 nm. The transmitter section uses a multiple quantum well 1550 nm DFB laser and is a class 1 laser compliant according to International Safety Standard IEC-60825. The receiver section uses an integrated InGaAs detector preamplifier (IDP) mounted in an optical header and a limiting post-amplifier IC. A PECL logic interface simplifies interface to external circuitry.

LASER SAFETY

This single mode transceiver is a Class 1 laser product. It complies with IEC-60825 and FDA 21 CFR 1040.10 and 1040.11. The transceiver must be operated within the specified temperature and voltage limits. The optical ports of the module shall be terminated with an optical connector or with a dust plug.

ORDER INFORMATION

P/No.	Bit Rate (Mb/s)	SONET /SDH	Distance (km)	Wavelength (nm)	Voltage (V)	Package	Temp. (°C)	TX Power (dBm)	RX Sens. (dBm)	RoHS Compliant
TRS-5340G	622		40	1550 DFB	3.3	1X9 SC/ST/FC	0 to 70	0 to -8	-28	Y
TRS-5340AG	622		40	1550 DFB	3.3	1X9 SC/ST/FC	-20 to 85	0 to -8	-28	Y

Absolute Maximum Ratings

Parameter	Symbol	Min	Max	Units	Notes
Storage Temperature	Tstg	-40	85	°C	
Operating Temperature	Topr	0 -20	70 85	°C	TRS-5340G TRS5340AG
Soldering Temperature	---		260	°C	10 seconds on leads only
Power Supply Voltage	Vcc	0	4.5	V	
Input Voltage	---	GND	Vcc	V	
Output Current	Iout	0	30	mA	

Recommended Operating Conditions

Parameter	Symbol	Min	Typ	Max	Units
Power Supply Voltage	Vcc	3.1	3.3	3.5	V
Operating Temperature	Topr	0 -20		70 85	°C / TRS-5340G °C / TRS-5340AG
Data Rate		50	622		Mb/s
Power Supply Current	Icc			260	mA

OPTOWAY TECHNOLOGY INC. No.38, Kuang Fu S. Road, Hu Kou, Hsin Chu Industrial Park, Hsin Chu, Taiwan 303
Tel: 886-3-5979798 Fax: 886-3-5979737
E-mail: sales@optoway.com.tw http: // www.optoway.com.tw

Transmitter Specifications (0^oC < Topr < 70^oC, 3.1V < Vcc < 3.5V)						
Parameter	**Symbol**	**Min**	**Typ**	**Max**	**Units**	**Notes**
Optical						
Optical Transmit Power	Po	-8	---	0	dBm	1
Output Center Wavelength	λ	1430	1550	1600	nm	
Output Spectrum Width	Δλ	---	---	1	nm	-20 dB Width
Side Mode Suppression Ratio	SMSR	30			dB	
Extinction Ratio	E_R	10	---	---	dB	
Output Eye	Compliant with Bellcore TR-NWT-000253 and ITU recommendation G.957					
Optical Rise Time	t_r			1.2	ns	10% to 90% Values
Optical Fall Time	t_f			1.2	ns	10% to 90% Values
Relative Intensity Noise	RIN			-116	dB/Hz	
Total Jitter	TJ			0.55	ns	2
Electrical						
Data Input Current – Low	I_{IL}	-350			μA	
Data Input Current – High	I_{IH}			350	μA	
Differential Input Voltage	V_{IH} - V_{IL}	300			mV	
Data Input Voltage – Low	V_{IL} - V_{CC}	-2.0		-1.58	V	3
Data Input Voltage -- High	V_{IH} - V_{CC}	-1.1		-0.74	V	3

Notes: 1. Output power is power coupled into a 9/125 μm single mode fiber.
2. Measured with a 2^{23}-1 PRBS with 72 ones and 72 zeros.
3. These inputs are compatible with 10K, 10KH and 100K ECL and LVPECL inputs.

Receiver Specifications (0^oC < Topr < 70^oC, 3.1 V < Vcc < 3.5V)						
Parameter	**Symbol**	**Min**	**Typ**	**Max**	**Units**	**Notes**
Optical						
Sensitivity	---	---	---	-28	dBm	1
Maximum Input Power	Pin	-3		---	dBm	
Signal Detect -- Asserted	Pa	---	---	-28	dBm	Transition: low to high
Signal Detect -- Deasserted	Pd	-40	---	---	dBm	Transition: high to low
Signal detect -- Hysteresis		1.0	---		dB	
Wavelength of Operation		1100	---	1600	nm	
Electrical						
Data Output Voltage – Low	V_{OL} - V_{CC}	-2.0		-1.58	V	2
Data Output Voltage – High	V_{OH} - V_{CC}	-1.1		-0.74	V	2
Signal Detect Output Voltage -- Low	V_{OL} - V_{CC}	-2.0		-1.58	V	TRS-5340G
Signal Detect Output Voltage -- High	V_{OH} - V_{CC}	-1.1		-0.74	V	
Signal Detect Output Voltage -- Low	V_{SDL}			0.8	V	TRS-5340CG
Signal Detect Output Voltage -- High	V_{SDH}	2.0			V	

Notes: 1. Minimum sensitivity and saturation levels at BER1E-10 for a 2^{23}-1 PRBS with 72 ones and 72 zeros.
2. These outputs are compatible with 10K, 10KH and 100K ECL and LVPECL outputs.

CONNECTION DIAGRAM

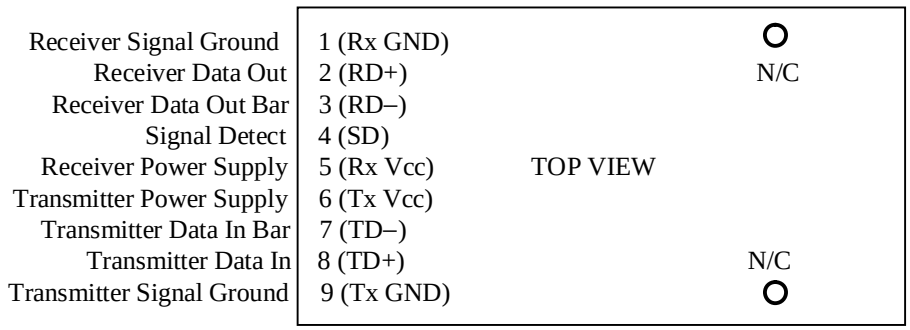

PIN	Symbol	Notes
1	Rx GND	Directly connect this pin to the receiver ground plane
2	RD+	See recommended circuit schematic
3	RD–	See recommended circuit schematic
4	SD	Active high on this indicates a received optical signal
5	Rx Vcc	+3.3V dc power for the receiver section
6	Tx Vcc	+3.3V dc power for the transmitter section
7	TD–	See recommended circuit schematic
8	TD+	See recommended circuit schematic
9	Tx GND	Directly connect this plan to the trransmitter ground plane

RECOMMENDED CIRCUIT SCHEMATIC

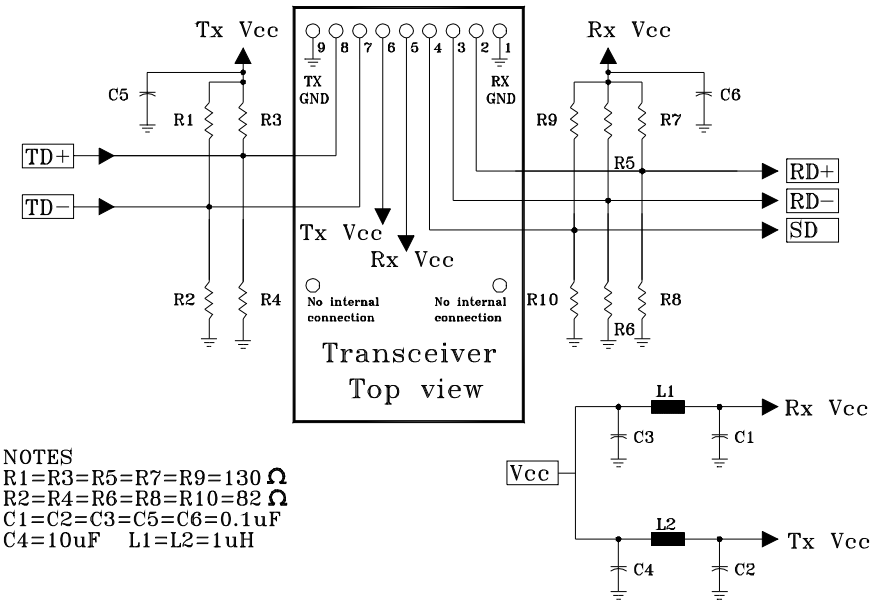

The split-load terminations for ECL signals need to be located at the input of devices receiving those ECL signals. The power supply filtering is required for good EMI performance. Use short tracks from the inductor L1/L2 to the module Rx Vcc and Tx Vcc. A GND plane under the module is required for good EMI and sensitivity performance.

PACKAGE DIAGRAM

Units in mm

1) SC Type

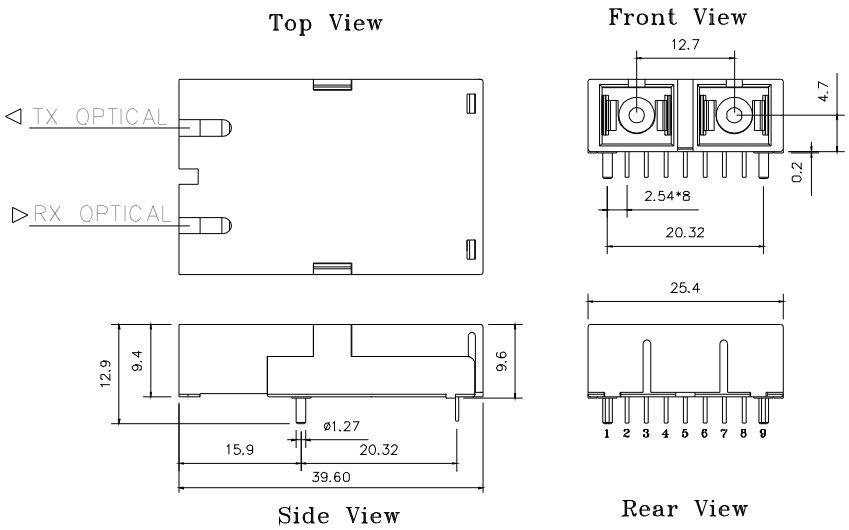

TRS-5340G / TRS-5340CG / TRS-5340AG / TRS-5340ACG

2) SC Type With Extended Shielding

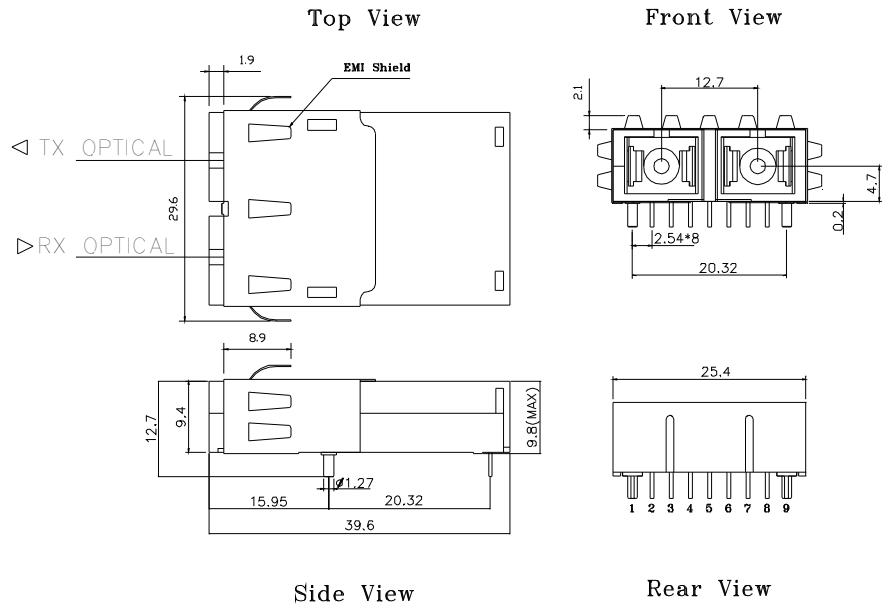

TRS-5340-EMG / TRS-5340C-EMG / TRS-5340A-EMG / TRS-5340AC-EMG

3) ST Type

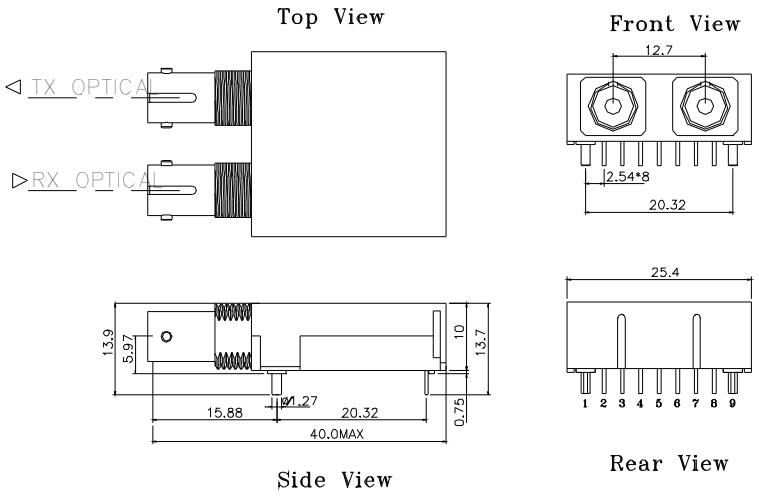

TRS-5340TG / TRS-5340CTG / TRS-5340ATG / TRS-5340ACTG

4) FC Type

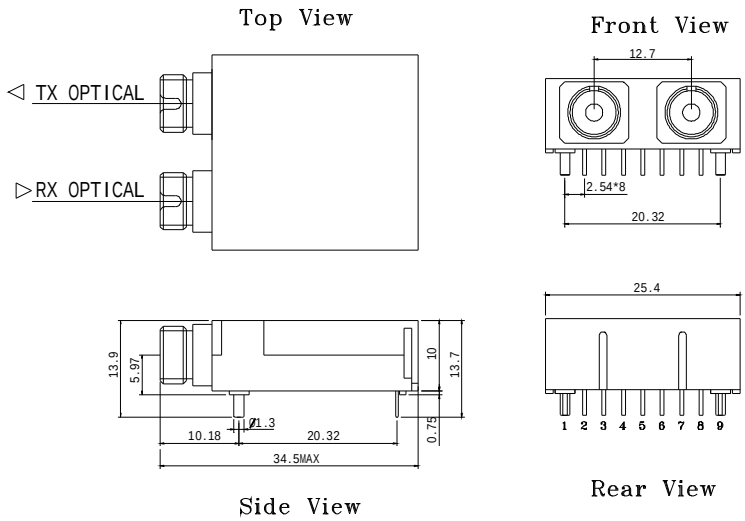

TRS-5340FG / TRS-5340CFG / TRS-5340AFG / TRS-5340ACFG

Note: Specifications subject to change without notice.