TRF37C75 40-4000 MHz RF Gain Block

1 Features

- 40 MHz – 4000 MHz
- Gain: 18 dB
- Noise Figure: 3.5 dB
- Output P1dB: 19.5 dBm at 2000 MHz
- Output IP3: 34 dBm at 2000 MHz
- Power Down Mode
- Single Supply: 5 V
- Stabilized Performance Over Temperature
- Unconditionally Stable
- Robust ESD: >1 kV HBM; >1 kV CDM

2 Applications

- General Purpose RF Gain Block
- Consumer
- Industrial
- Utility Meters
- Low-cost Radios
- Cellular Base Station
- Wireless Infrastructure
- RF Backhaul
- Radar
- Electronic Warfare
- Software-defined Radio
- Test and Measurement
- Point-to-Point/Multipoint Microwave
- Software Defined Radios
- RF Repeaters
- Distributed Antenna Systems
- LO and PA Driver Amplifier
- Wireless Data, Satellite, DBS, CATV
- IF Amplifier

3 Description

The TRF37C75 is packaged in a 2.00mm x 2.00mm WSON with a power down pin making it ideal for applications where space and low power modes are critical.

The TRF37C75 is designed for ease of use. For maximum flexibility, this family of parts uses a common 5 V supply and consumes 85 mA. In addition, this family was designed with an active bias circuit that provides a stable and predictable bias current over process, temperature and voltage variations. For gain and linearity budgets the device was designed to provide a flat gain response and excellent OIP3 out to 4000 MHz. For space constrained applications this family is internally matched to 50 Ω which simplifies ease of use and minimizes needed PCB area.

Device Information(1)

PART NUMBER	PACKAGE	BODY SIZE (NOM)
TRF37C75	WSON (32)	2.00mm x 2.00mm

(1) For all available packages, see the orderable addendum at the end of the datasheet.

Simplified Schematic

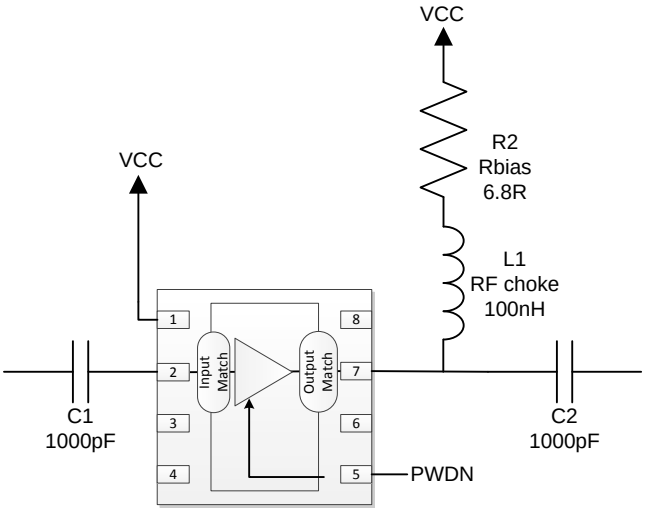

An IMPORTANT NOTICE at the end of this data sheet addresses availability, warranty, changes, use in safety-critical applications, intellectual property matters and other important disclaimers. PRODUCTION DATA.

Table of Contents

1 Features ... 1
2 Applications ... 1
3 Description ... 1
4 Revision History ... 2
5 Pin Configuration and Functions ... 3
6 Specifications ... 4
6.1 Absolute Maximum Ratings ... 4
6.2 Handling Ratings ... 4
6.3 Recommended Operating Conditions ... 4
6.4 Thermal Information ... 4
6.5 Electrical Characteristics ... 5
6.6 Timing Requirements ... 5
6.7 Typical Characteristics ... 6
7 Detailed Description ... 8
7.1 Overview ... 8
7.2 Functional Block Diagram ... 8
7.3 Feature Description ... 8
7.4 Device Functional Modes ... 8
8 Applications and Implementation ... 9
8.1 Application Information ... 9
8.2 Typical Application ... 9
9 Power Supply Recommendations ... 10
10 Layout ... 11
10.1 Layout Guidelines ... 11
10.2 Layout Example ... 11
11 Device and Documentation Support ... 12
11.1 Trademarks ... 12
11.2 Electrostatic Discharge Caution ... 12
11.3 Glossary ... 12
12 Mechanical, Packaging, and Orderable Information ... 12

4 Revision History

DATE	REVISION	NOTES
May 2014	*	Initial release.

Copyright © 2014, Texas Instruments Incorporated

5 Pin Configuration and Functions

DSG PACKAGE
(TOP VIEW)

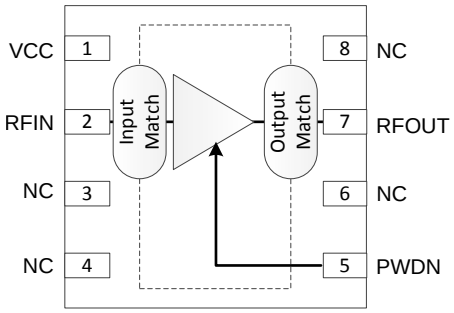

Pin Functions

PIN		DESCRIPTION
NAME	NO.	
VCC	1	DC Bias.
RFIN	2	RF input. Connect to an RF source through a DC-blocking capacitor. Internally matched to 50 Ω.
NC	3, 4, 6, 8	No electrical connection. Connect pad to GND for board level reliability integrity.
PWDN	5	When high the device is in power down state. When LOW or NC the device is in active state. Internal pulldown resistor to GND.
RFOUT	7	RF Output and DC Bias (V_{CC}). Connect to DC supply through an RF choke inductor. Connect to output load through a DC-blocking capacitor. Internally matched to 50 Ω.
GND	PowerPAD™	RF and DC GND. Connect to PCB ground plane.

Copyright © 2014, Texas Instruments Incorporated

6 Specifications

6.1 Absolute Maximum Ratings

over operating free-air temperature range (unless otherwise noted) (1)

		MIN	MAX	UNIT
Supply Input voltage		–0.3	6	V
Input Power	With recommended Rbias resistor		10	dBm
Operating virtual junction temperature range		–40	150	°C

(1) Stresses beyond those listed under *Absolute Maximum Ratings* may cause permanent damage to the device. These are stress ratings only, which do not imply functional operation of the device at these or any other conditions beyond those indicated under *Recommended Operating Conditions*. Exposure to absolute-maximum-rated conditions for extended periods may affect device reliability.

6.2 Handling Ratings

			MIN	MAX	UNIT
T_{STG}	Storage temperature range		–65	150	°C
V_{ESD}	Electrostatic discharge	Human body model (HBM), per ANSI/ESDA/JEDEC JS-001, all pins (1)	–1	1	kV
		Charged device model (CDM), per JEDEC specification JESD22-C101, all pins (2)	–1	1	kV

(1) JEDEC document JEP155 states that 500-V HBM allows safe manufacturing with a standard ESD control process.
(2) JEDEC document JEP157 states that 250-V CDM allows safe manufacturing with a standard ESD control process.

6.3 Recommended Operating Conditions

over operating free-air temperature range (unless otherwise noted)

		MIN	NOM	MAX	UNIT
Supply Voltage, V_{CC}		4.5	5	5.25	V
Operating junction temperature, T_J		–40		125	°C

6.4 Thermal Information

THERMAL METRIC (1)		DSG	UNIT
		8 PINS	
$R_{\theta JA}$	Junction-to-ambient thermal resistance	79.3	°C/W
$R_{\theta JCtop}$	Junction-to-case (top) thermal resistance	110	
$R_{\theta JB}$	Junction-to-board thermal resistance	49	
ψ_{JT}	Junction-to-top characterization parameter	6	
ψ_{JB}	Junction-to-board characterization parameter	49.4	
$R_{\theta JCbot}$	Junction-to-case (bottom) thermal resistance	19.2	

(1) For more information about traditional and new thermal metrics, see the *IC Package Thermal Metrics* application report, SPRA953.

Copyright © 2014, Texas Instruments Incorporated

6.5 Electrical Characteristics

V_{CC} = 5 V, T_A = 25°C, PWDN = Low, R_{BIAS} = 6.8 Ω, L_{OUT} = 100 nH, C1 = C2 = 1000 pF, Z_S = Z_L = 50 Ω (unless otherwise noted)

PARAMETER		TEST CONDITIONS	MIN	TYP	MAX	UNIT
DC Parameters						
I_{CC}	Total supply current			85		mA
	Power down current	PWDN = High		125		µA
P_{diss}	Power dissipation			0.425		W
RF Frequency Range						
	Frequency range		40		4000	MHz
G	Small signal gain	f_{RF} = 400 MHz		18.8		dB
		f_{RF} = 2000 MHz		17.5		dB
		f_{RF} = 3000 MHz		17		dB
		f_{RF} = 4000 MHz		16		dB
OP1dB	Output 1dB compression point	At 2000 MHz		18		dBm
OIP3	Output 3rd order intercept point	At 2000 MHz, 2-tone 10MHz apart		34		dBm
NF	Noise figure	At 2000 MHz		3.5		dB
$R_{(LI)}$	Input return loss			22		dB
$R_{(LO)}$	Output return loss			11		dB
PWDN Pin						
V_{IH}	High level input level		2			V
V_{IL}	Low level input level				0.8	V
I_{IH}	High level input current			30		µA
I_{IL}	Low level input current			1		µA

6.6 Timing Requirements

			MIN	TYP	MAX	UNIT
PWDN Pin						
t_{ON}	Turn-on Time	50% TTL to 90% P_{OUT}		0.6		µs
t_{OFF}	Turn-off Time	50% TTL to 10% P_{OUT}		1.4		µs

Copyright © 2014, Texas Instruments Incorporated

6.7 Typical Characteristics

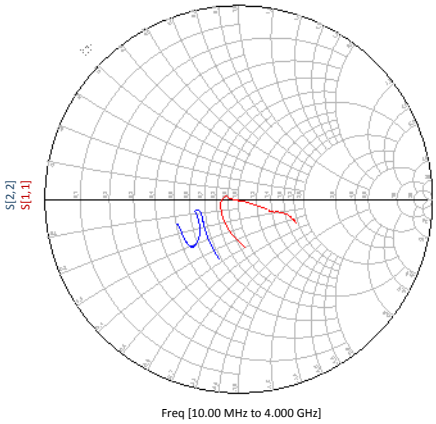

V_{CC} = 5 V Temp = 25°C 10 MHz to 4 GHz
Data Taken with EVM and Bias T, De-embedded to DUT pin

Figure 1. Smith Chart – S11, S22

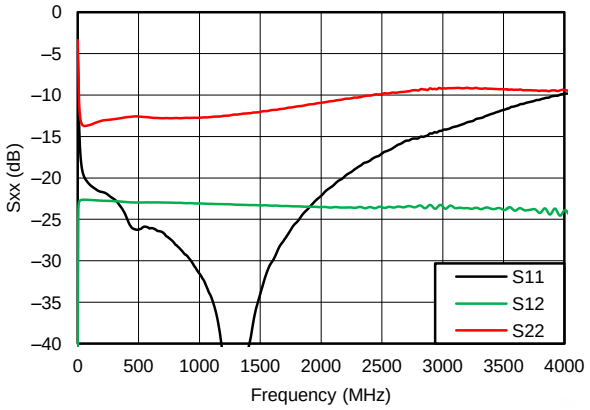

V_{CC} = 5 V Temp = 25°C 40 MHz to 4 GHz
Data Taken with EVM and Bias T, De-embedded to DUT pin

Figure 2. S11, S12, S22

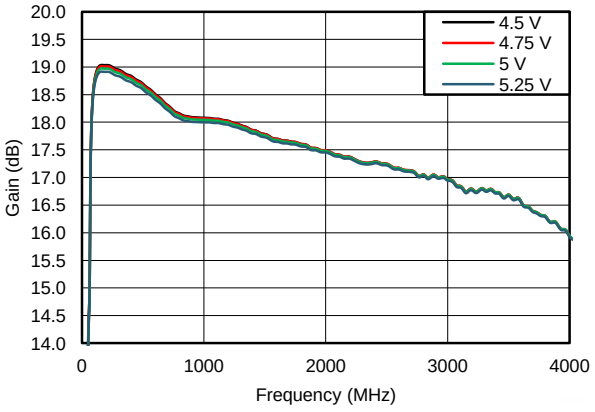

V_{CC} curves Temp = 25°C Pin = –15 dBm

Figure 3. Gain vs Frequency

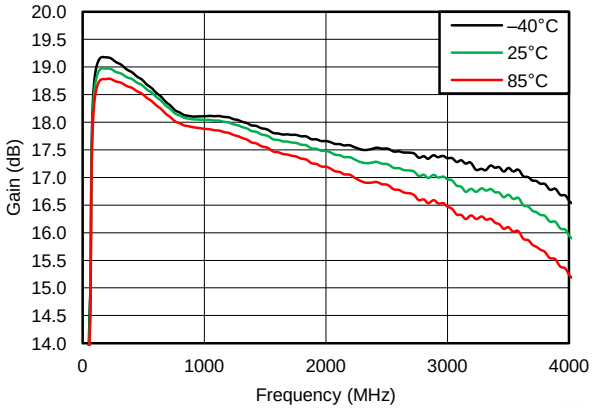

Temp curves V_{CC} = 5 V Pin = –15 dBm

Figure 4. Gain vs Frequency

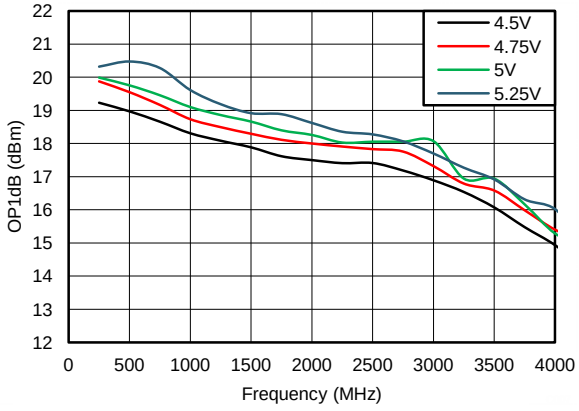

V_{CC} curves Temp = 25°C

Figure 5. OP1dB vs Frequency

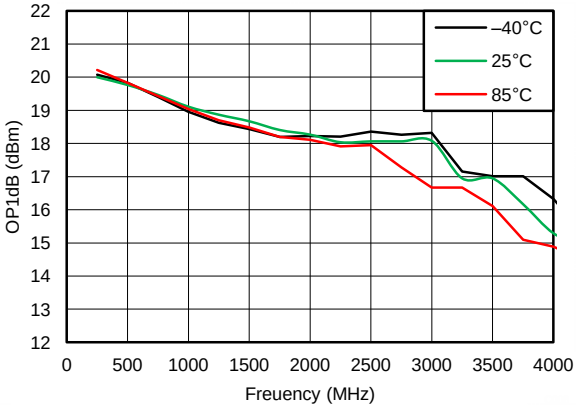

Temp curves V_{CC} = 5 V

Figure 6. OP1dB vs Frequency

Copyright © 2014, Texas Instruments Incorporated

Typical Characteristics (continued)

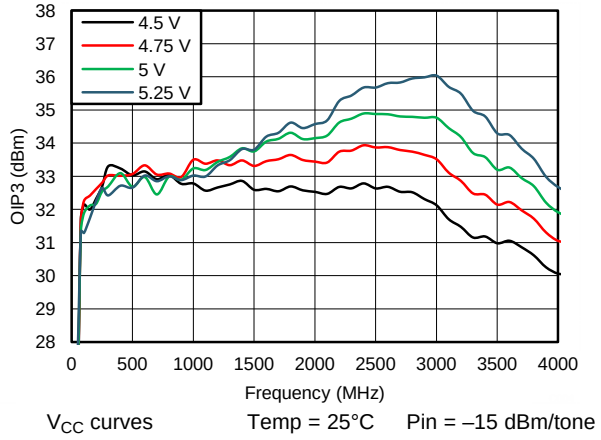

Figure 7. OIP3 vs Frequency

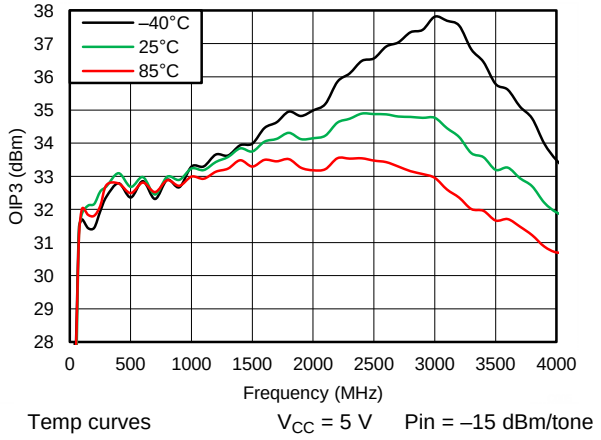

Figure 8. OIP3 vs Frequency

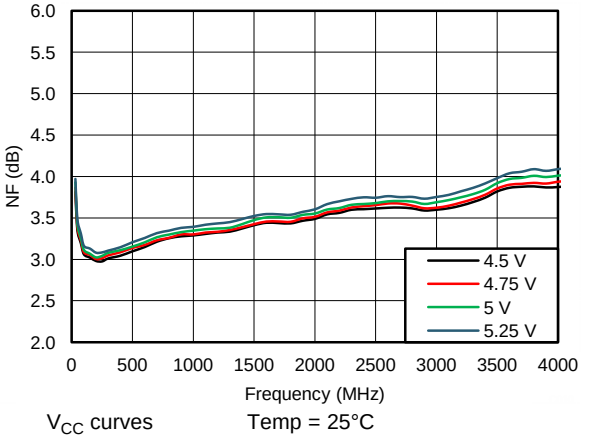

Figure 9. NF vs Frequency

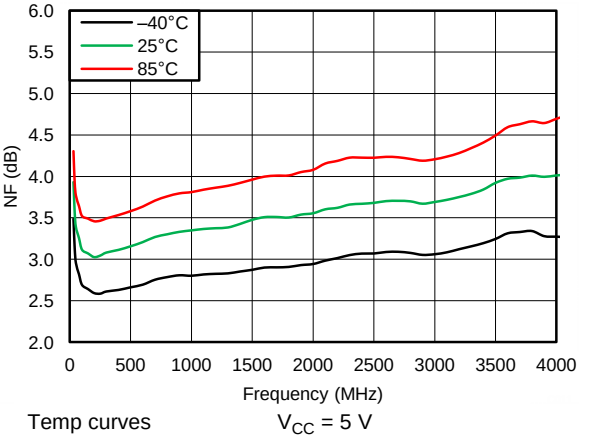

Figure 10. NF vs Frequency

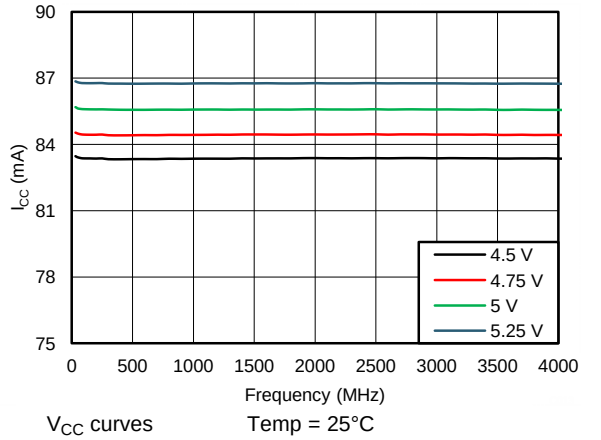

Figure 11. I_{CC} vs Frequency

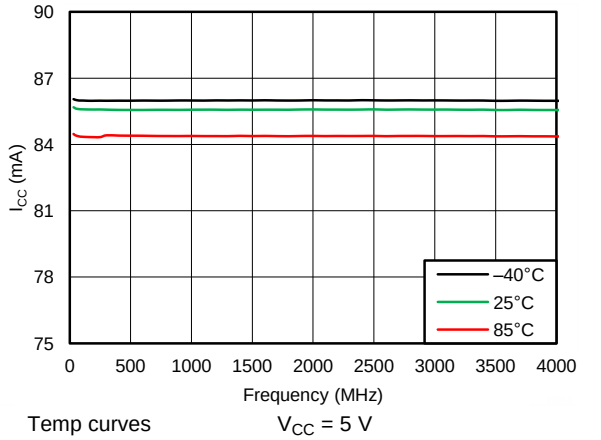

Figure 12. I_{CC} vs Frequency

Copyright © 2014, Texas Instruments Incorporated

7 Detailed Description

7.1 Overview

The device is a 5 V general purpose RF gain block. It is a SiGe Darlington amplifier with integrated 50 Ω input and output matching. The device contains an active bias circuit to maintain performance over a wide temperature and voltage range. The included power down function allows the amplifier to shut down saving power when the amplifier is not needed. Fast shut down and start up enable the amplifier to be used in a host of time division duplex applications.

7.2 Functional Block Diagram

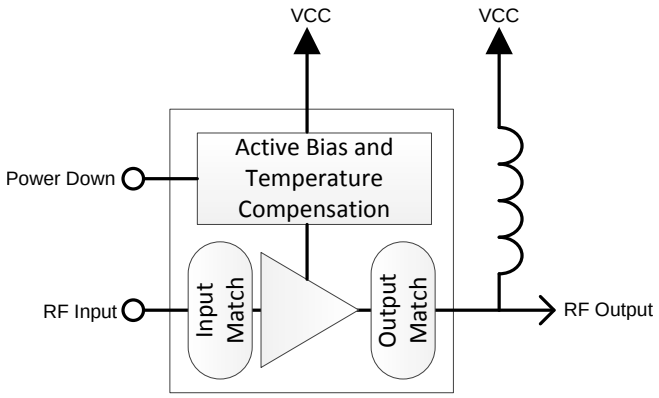

7.3 Feature Description

The TRF37C75 is a fixed gain RF amplifier. It is internally matched to 50 Ω on both the input and output. It is a fully cascadable general purpose amplifier. The included active bias circuitry ensures the amplifier performance is optimized over the full operating temperature and voltage ranges.

7.4 Device Functional Modes

7.4.1 Power Down

The TRF37C75 PWDN pin can be left unconnected for normal operation or a logic-high for disable mode operation. For applications that use the power down mode, normal 5 V TLL levels are supported.

Copyright © 2014, Texas Instruments Incorporated

8 Applications and Implementation

8.1 Application Information

The TRF37C75 is a wideband high performance general purpose RF amplifier. To maximize its performance, good RF layout and grounding techniques should be employed.

8.2 Typical Application

The TRF37C75 device is typically placed in a system as illustrated in Figure 13.

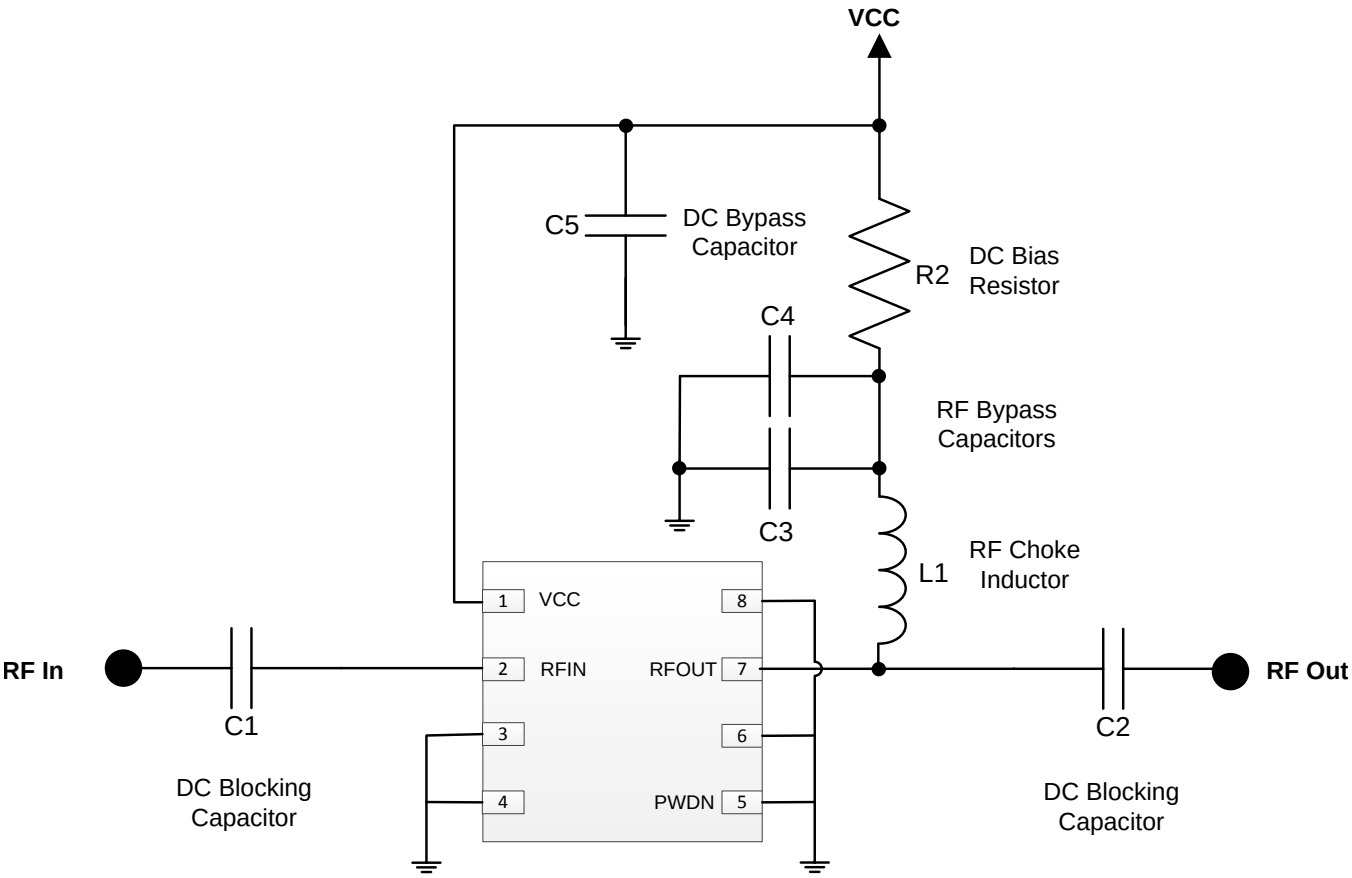

Figure 13. Typical Application Schematic for TRF37C75

8.2.1 Design Requirements

Table 1. Design Parameters

PARAMETERS	EXAMPLE VALUES
Input power range	< 3 dBm
Output power	< 18 dBm
Operating frequency range	40 — 4000 MHz

8.2.2 Detailed Design Procedure

The TRF37C75 is a simple to use internally matched and cascadable RF amplifier. Following the recommended RF layout with good quality RF components and local DC bypass capacitors will ensure optimal performance is achieved. TI provides various support materials including S-Parameter and ADS models to allow the design to be optimized to the user's particular performance needs.

Copyright © 2014, Texas Instruments Incorporated

8.2.3 Application Curves

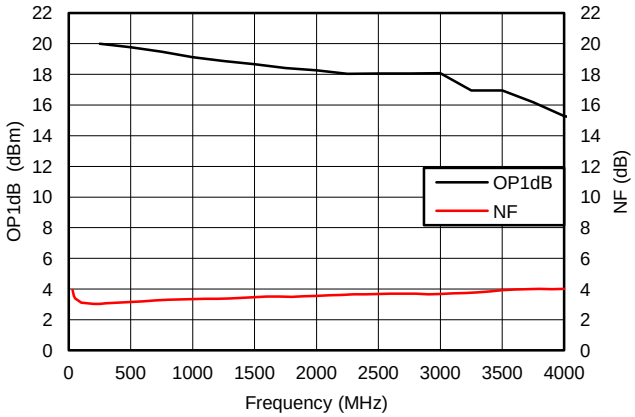

Figure 14. OP1dB and NF vs Frequency

9 Power Supply Recommendations

All supplies may be generated from a common nominal 5 V source but should be isolated through decoupling capacitors placed close to the device. The typical application schematic in Figure 13 is an excellent example. Select capacitors with self-resonant frequency near the application frequency. When multiple capacitors are used in parallel to create a broadband decoupling network, place the capacitor with the higher self-resonant frequency closer to the device. Expensive tantalum capacitors are not needed for optimal performance.

Copyright © 2014, Texas Instruments Incorporated

10 Layout

10.1 Layout Guidelines

Good layout practice helps to enable excellent linearity and isolation performance. An example of good layout is shown in Figure 15. In the example, only the top signal layer and its adjacent ground reference plane are shown.

- Excellent electrical connection from the PowerPAD™ to the board ground is essential. Use the recommended footprint, solder the pad to the board, and do not include solder mask under the pad.
- Connect pad ground to device terminal ground on the top board layer.
- Verify that the return DC and RF current path have a low impedance ground plane directly under the package and RF signal traces into and out of the amplifier.
- Ensure that ground planes on the top and any internal layers are well stitched with vias.
- Do not route RF signal lines over breaks in the reference ground plane.
- Avoid routing clocks and digital control lines near RF signal lines.
- Do not route RF or DC signal lines over noisy power planes. Ground is the best reference, although clean power planes can serve where necessary.
- Place supply decoupling close to the device.

10.2 Layout Example

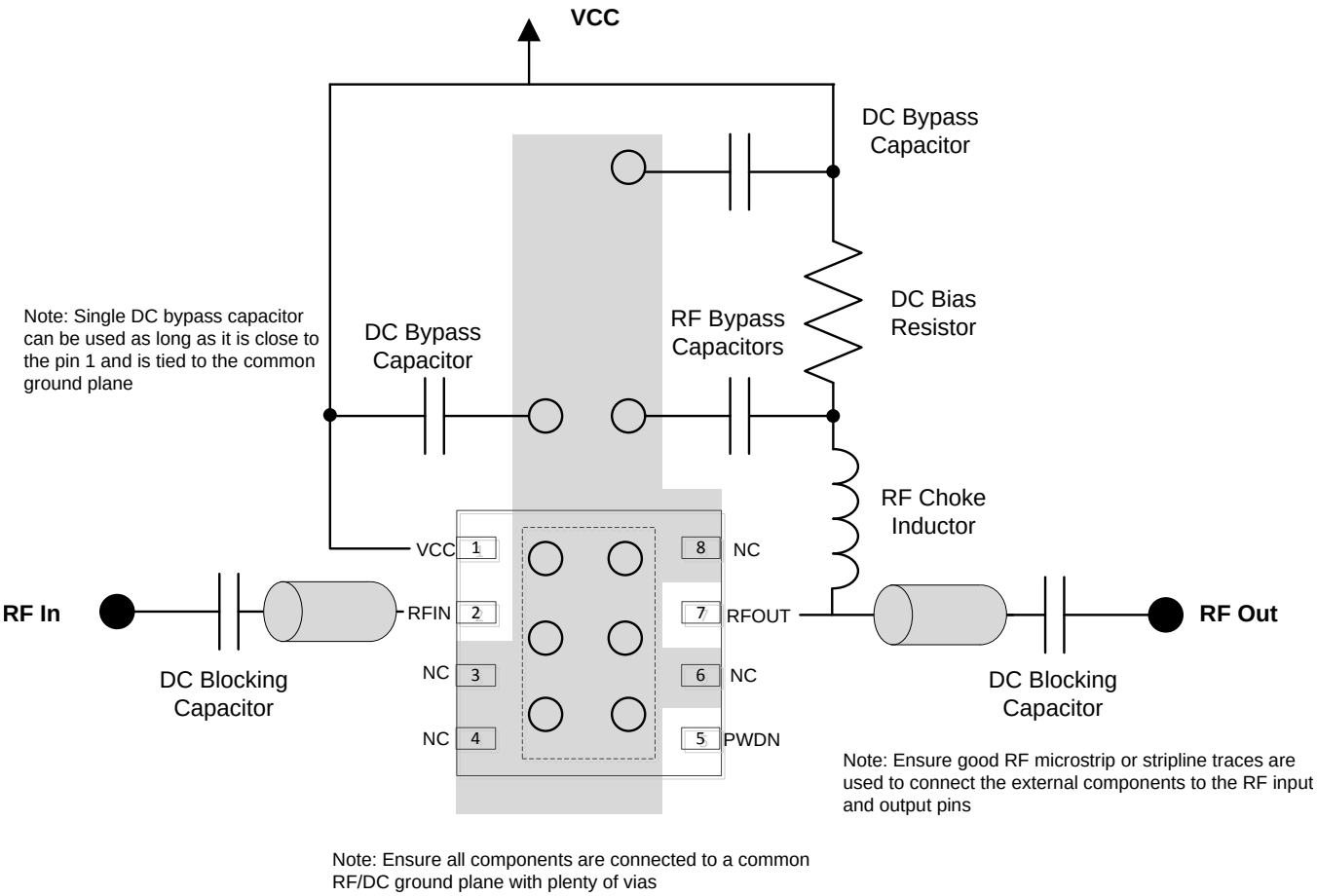

Figure 15. Layout

11 Device and Documentation Support

11.1 Trademarks

PowerPAD is a trademark of Texas Instruments.

11.2 Electrostatic Discharge Caution



These devices have limited built-in ESD protection. The leads should be shorted together or the device placed in conductive foam during storage or handling to prevent electrostatic damage to the MOS gates.

11.3 Glossary

SLYZ022 — *TI Glossary*.

This glossary lists and explains terms, acronyms and definitions.

12 Mechanical, Packaging, and Orderable Information

The following pages include mechanical packaging and orderable information. This information is the most current data available for the designated devices. This data is subject to change without notice and revision of this document. For browser-based versions of this data sheet, refer to the left-hand navigation.

Copyright © 2014, Texas Instruments Incorporated

PACKAGING INFORMATION

Orderable Device	Status (1)	Package Type	Package Drawing	Pins	Package Qty	Eco Plan (2)	Lead/Ball Finish (6)	MSL Peak Temp (3)	Op Temp (°C)	Device Marking (4/5)	Samples
TRF37C75IDSGR	ACTIVE	WSON	DSG	8	3000	Green (RoHS & no Sb/Br)	CU NIPDAU	Level-2-260C-1 YEAR	-40 to 85	C75I	Samples
TRF37C75IDSGT	ACTIVE	WSON	DSG	8	250	Green (RoHS & no Sb/Br)	CU NIPDAU	Level-2-260C-1 YEAR	-40 to 85	C75I	Samples

(1) The marketing status values are defined as follows:
ACTIVE: Product device recommended for new designs.
LIFEBUY: TI has announced that the device will be discontinued, and a lifetime-buy period is in effect.
NRND: Not recommended for new designs. Device is in production to support existing customers, but TI does not recommend using this part in a new design.
PREVIEW: Device has been announced but is not in production. Samples may or may not be available.
OBSOLETE: TI has discontinued the production of the device.

(2) Eco Plan - The planned eco-friendly classification: Pb-Free (RoHS), Pb-Free (RoHS Exempt), or Green (RoHS & no Sb/Br) - please check http://www.ti.com/productcontent for the latest availability information and additional product content details.
TBD: The Pb-Free/Green conversion plan has not been defined.
Pb-Free (RoHS): TI's terms "Lead-Free" or "Pb-Free" mean semiconductor products that are compatible with the current RoHS requirements for all 6 substances, including the requirement that lead not exceed 0.1% by weight in homogeneous materials. Where designed to be soldered at high temperatures, TI Pb-Free products are suitable for use in specified lead-free processes.
Pb-Free (RoHS Exempt): This component has a RoHS exemption for either 1) lead-based flip-chip solder bumps used between the die and package, or 2) lead-based die adhesive used between the die and leadframe. The component is otherwise considered Pb-Free (RoHS compatible) as defined above.
Green (RoHS & no Sb/Br): TI defines "Green" to mean Pb-Free (RoHS compatible), and free of Bromine (Br) and Antimony (Sb) based flame retardants (Br or Sb do not exceed 0.1% by weight in homogeneous material)

(3) MSL, Peak Temp. - The Moisture Sensitivity Level rating according to the JEDEC industry standard classifications, and peak solder temperature.

(4) There may be additional marking, which relates to the logo, the lot trace code information, or the environmental category on the device.

(5) Multiple Device Markings will be inside parentheses. Only one Device Marking contained in parentheses and separated by a "~" will appear on a device. If a line is indented then it is a continuation of the previous line and the two combined represent the entire Device Marking for that device.

(6) Lead/Ball Finish - Orderable Devices may have multiple material finish options. Finish options are separated by a vertical ruled line. Lead/Ball Finish values may wrap to two lines if the finish value exceeds the maximum column width.

Important Information and Disclaimer: The information provided on this page represents TI's knowledge and belief as of the date that it is provided. TI bases its knowledge and belief on information provided by third parties, and makes no representation or warranty as to the accuracy of such information. Efforts are underway to better integrate information from third parties. TI has taken and continues to take reasonable steps to provide representative and accurate information but may not have conducted destructive testing or chemical analysis on incoming materials and chemicals. TI and TI suppliers consider certain information to be proprietary, and thus CAS numbers and other limited information may not be available for release.

In no event shall TI's liability arising out of such information exceed the total purchase price of the TI part(s) at issue in this document sold by TI to Customer on an annual basis.

TAPE AND REEL INFORMATION

REEL DIMENSIONS

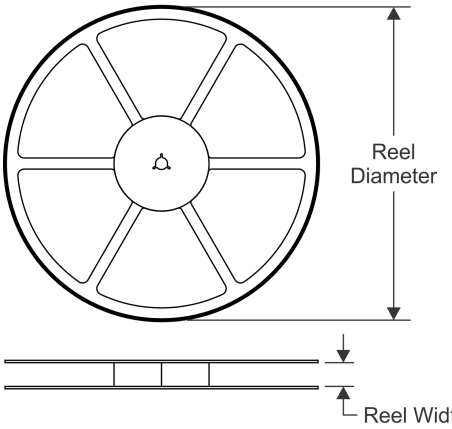

TAPE DIMENSIONS

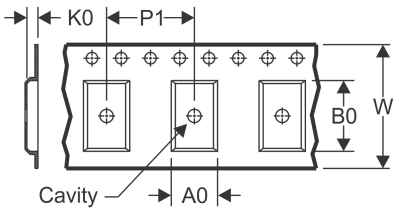

A0	Dimension designed to accommodate the component width
B0	Dimension designed to accommodate the component length
K0	Dimension designed to accommodate the component thickness
W	Overall width of the carrier tape
P1	Pitch between successive cavity centers

QUADRANT ASSIGNMENTS FOR PIN 1 ORIENTATION IN TAPE

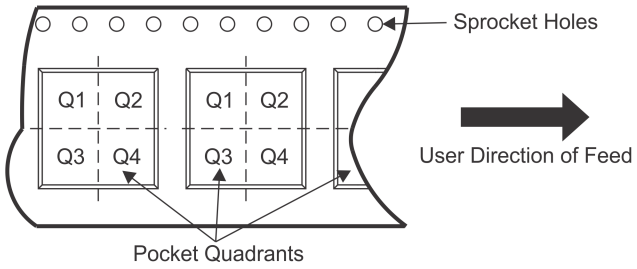

*All dimensions are nominal

Device	Package Type	Package Drawing	Pins	SPQ	Reel Diameter (mm)	Reel Width W1 (mm)	A0 (mm)	B0 (mm)	K0 (mm)	P1 (mm)	W (mm)	Pin1 Quadrant
TRF37C75IDSGR	WSON	DSG	8	3000	180.0	8.4	2.3	2.3	1.15	4.0	8.0	Q2
TRF37C75IDSGT	WSON	DSG	8	250	180.0	8.4	2.3	2.3	1.15	4.0	8.0	Q2

TAPE AND REEL BOX DIMENSIONS

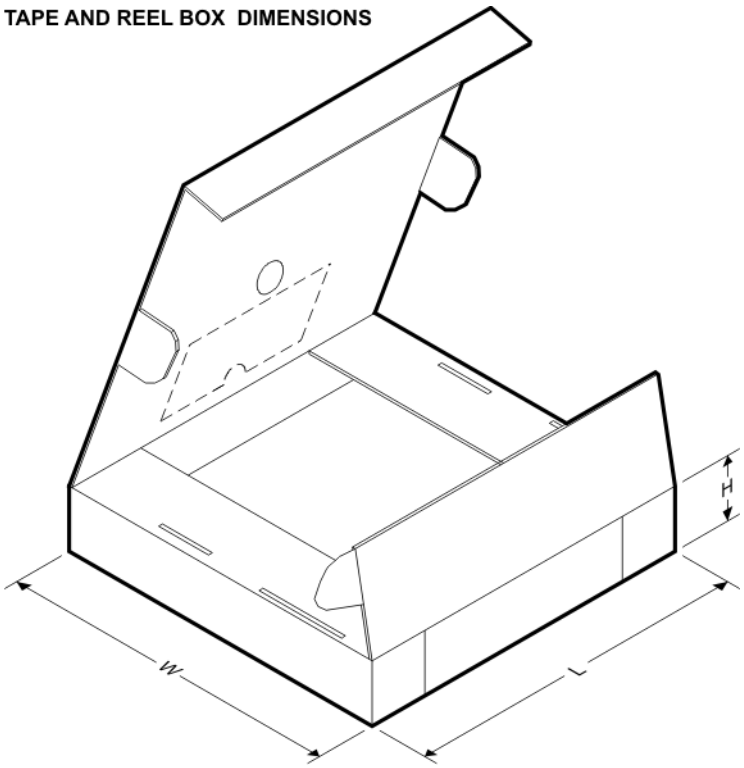

*All dimensions are nominal

Device	Package Type	Package Drawing	Pins	SPQ	Length (mm)	Width (mm)	Height (mm)
TRF37C75IDSGR	WSON	DSG	8	3000	210.0	185.0	35.0
TRF37C75IDSGT	WSON	DSG	8	250	210.0	185.0	35.0

DSG (S–PWSON–N8) PLASTIC SMALL OUTLINE NO–LEAD

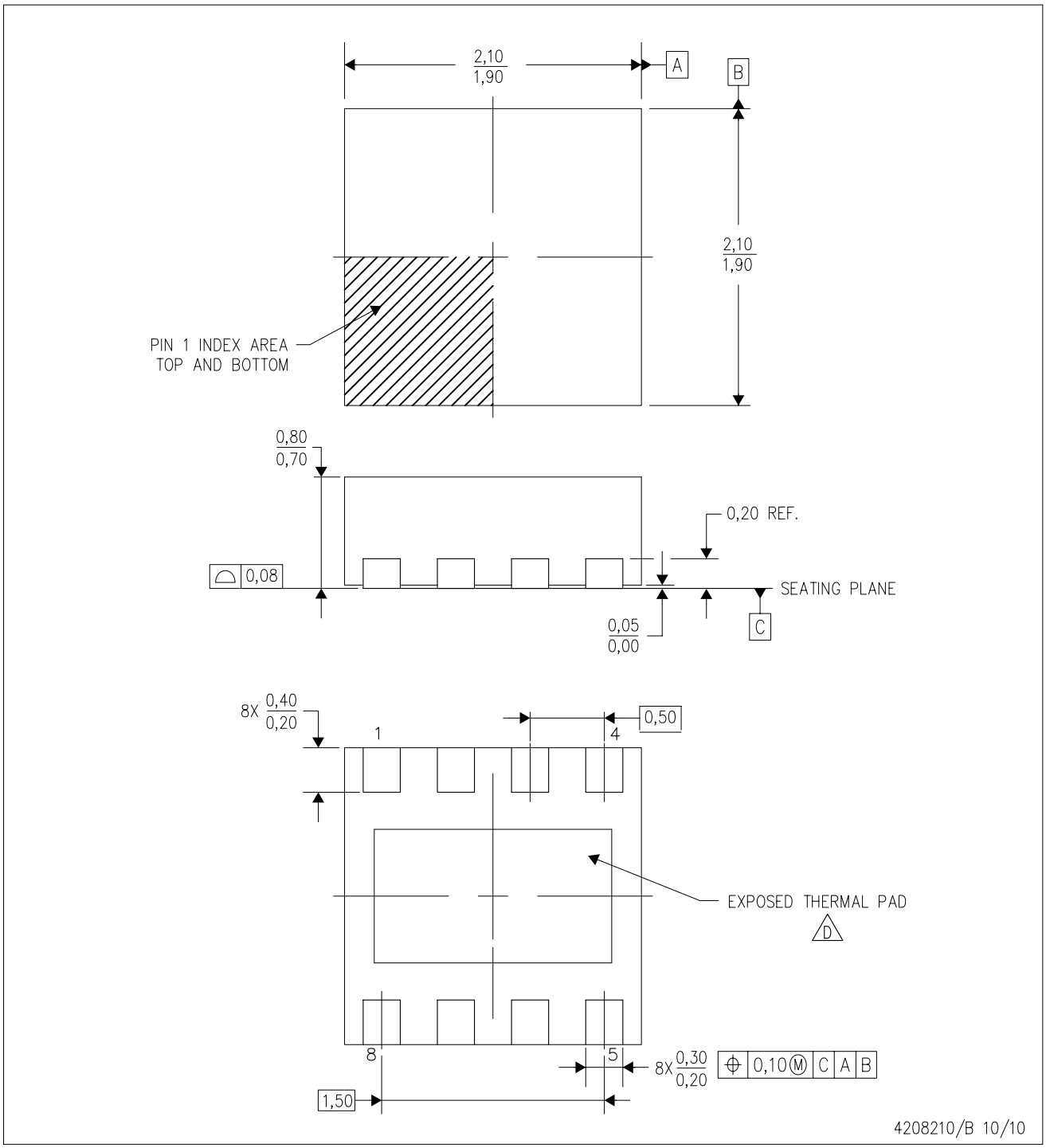

NOTES:
A. All linear dimensions are in millimeters. Dimensioning and tolerancing per ASME Y14.5M–1994.
B. This drawing is subject to change without notice.
C. Quad Flatpack, No–Leads (QFN) package configuration.
D. The package thermal pad must be soldered to the board for thermal and mechanical performance. See the Product Data Sheet for details regarding the exposed thermal pad dimensions.
E. Falls within JEDEC MO–229.

DSG (S–PWSON–N8) PLASTIC SMALL OUTLINE NO–LEAD

THERMAL INFORMATION

This package incorporates an exposed thermal pad that is designed to be attached directly to an external heatsink. The thermal pad must be soldered directly to the printed circuit board (PCB). After soldering, the PCB can be used as a heatsink. In addition, through the use of thermal vias, the thermal pad can be attached directly to the appropriate copper plane shown in the electrical schematic for the device, or alternatively, can be attached to a special heatsink structure designed into the PCB. This design optimizes the heat transfer from the integrated circuit (IC).

For information on the Quad Flatpack No–Lead (QFN) package and its advantages, refer to Application Report, QFN/SON PCB Attachment, Texas Instruments Literature No. SLUA271. This document is available at www.ti.com.

The exposed thermal pad dimensions for this package are shown in the following illustration.

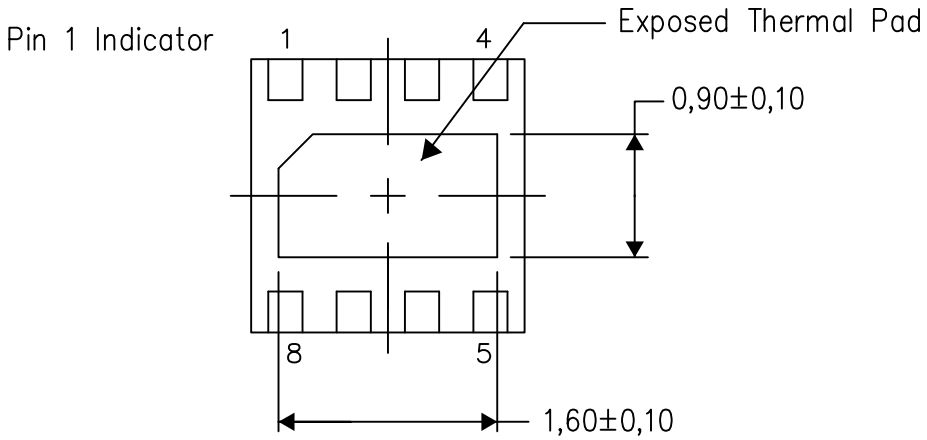

Bottom View

Exposed Thermal Pad Dimensions

4208347/G 08/13

NOTE: All linear dimensions are in millimeters

DSG (S–PWSON–N8) PLASTIC SMALL OUTLINE NO–LEAD

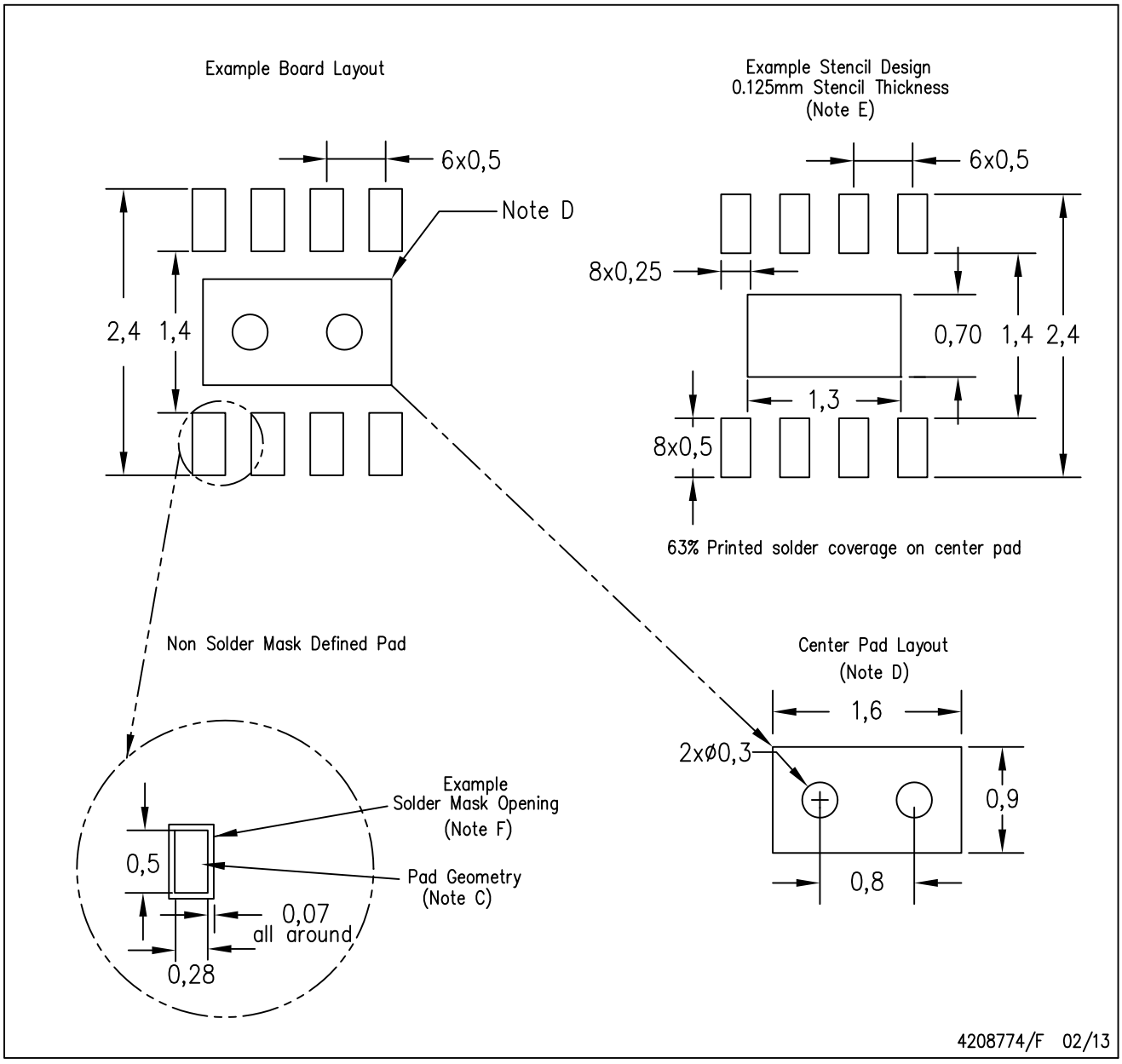

NOTES:
A. All linear dimensions are in millimeters.
B. This drawing is subject to change without notice.
C. Publication IPC–7351 is recommended for alternate designs.
D. This package is designed to be soldered to a thermal pad on the board. Refer to Application Note, QFN/SON PCB Attachment, Texas Instruments Literature No. SLUA271, and also the Product Data Sheets for specific thermal information, via requirements, and recommended board layout. These documents are available at www.ti.com <http://www.ti.com>.
E. Laser cutting apertures with trapezoidal walls and also rounding corners will offer better paste release. Customers should contact their board assembly site for stencil design recommendations. Refer to IPC 7525 for stencil design considerations.
F. Customers should contact their board fabrication site for solder mask tolerances.

IMPORTANT NOTICE

Texas Instruments Incorporated and its subsidiaries (TI) reserve the right to make corrections, enhancements, improvements and other changes to its semiconductor products and services per JESD46, latest issue, and to discontinue any product or service per JESD48, latest issue. Buyers should obtain the latest relevant information before placing orders and should verify that such information is current and complete. All semiconductor products (also referred to herein as “components”) are sold subject to TI’s terms and conditions of sale supplied at the time of order acknowledgment.

TI warrants performance of its components to the specifications applicable at the time of sale, in accordance with the warranty in TI’s terms and conditions of sale of semiconductor products. Testing and other quality control techniques are used to the extent TI deems necessary to support this warranty. Except where mandated by applicable law, testing of all parameters of each component is not necessarily performed.

TI assumes no liability for applications assistance or the design of Buyers’ products. Buyers are responsible for their products and applications using TI components. To minimize the risks associated with Buyers’ products and applications, Buyers should provide adequate design and operating safeguards.

TI does not warrant or represent that any license, either express or implied, is granted under any patent right, copyright, mask work right, or other intellectual property right relating to any combination, machine, or process in which TI components or services are used. Information published by TI regarding third-party products or services does not constitute a license to use such products or services or a warranty or endorsement thereof. Use of such information may require a license from a third party under the patents or other intellectual property of the third party, or a license from TI under the patents or other intellectual property of TI.

Reproduction of significant portions of TI information in TI data books or data sheets is permissible only if reproduction is without alteration and is accompanied by all associated warranties, conditions, limitations, and notices. TI is not responsible or liable for such altered documentation. Information of third parties may be subject to additional restrictions.

Resale of TI components or services with statements different from or beyond the parameters stated by TI for that component or service voids all express and any implied warranties for the associated TI component or service and is an unfair and deceptive business practice. TI is not responsible or liable for any such statements.

Buyer acknowledges and agrees that it is solely responsible for compliance with all legal, regulatory and safety-related requirements concerning its products, and any use of TI components in its applications, notwithstanding any applications-related information or support that may be provided by TI. Buyer represents and agrees that it has all the necessary expertise to create and implement safeguards which anticipate dangerous consequences of failures, monitor failures and their consequences, lessen the likelihood of failures that might cause harm and take appropriate remedial actions. Buyer will fully indemnify TI and its representatives against any damages arising out of the use of any TI components in safety-critical applications.

In some cases, TI components may be promoted specifically to facilitate safety-related applications. With such components, TI’s goal is to help enable customers to design and create their own end-product solutions that meet applicable functional safety standards and requirements. Nonetheless, such components are subject to these terms.

No TI components are authorized for use in FDA Class III (or similar life-critical medical equipment) unless authorized officers of the parties have executed a special agreement specifically governing such use.

Only those TI components which TI has specifically designated as military grade or “enhanced plastic” are designed and intended for use in military/aerospace applications or environments. Buyer acknowledges and agrees that any military or aerospace use of TI components which have ***not*** been so designated is solely at the Buyer's risk, and that Buyer is solely responsible for compliance with all legal and regulatory requirements in connection with such use.

TI has specifically designated certain components as meeting ISO/TS16949 requirements, mainly for automotive use. In any case of use of non-designated products, TI will not be responsible for any failure to meet ISO/TS16949.

Products		**Applications**	
Audio	www.ti.com/audio	Automotive and Transportation	www.ti.com/automotive
Amplifiers	amplifier.ti.com	Communications and Telecom	www.ti.com/communications
Data Converters	dataconverter.ti.com	Computers and Peripherals	www.ti.com/computers
DLP® Products	www.dlp.com	Consumer Electronics	www.ti.com/consumer-apps
DSP	dsp.ti.com	Energy and Lighting	www.ti.com/energy
Clocks and Timers	www.ti.com/clocks	Industrial	www.ti.com/industrial
Interface	interface.ti.com	Medical	www.ti.com/medical
Logic	logic.ti.com	Security	www.ti.com/security
Power Mgmt	power.ti.com	Space, Avionics and Defense	www.ti.com/space-avionics-defense
Microcontrollers	microcontroller.ti.com	Video and Imaging	www.ti.com/video
RFID	www.ti-rfid.com		
OMAP Applications Processors	www.ti.com/omap	**TI E2E Community**	e2e.ti.com
Wireless Connectivity	www.ti.com/wirelessconnectivity		

Mailing Address: Texas Instruments, Post Office Box 655303, Dallas, Texas 75265
Copyright © 2014, Texas Instruments Incorporated