TRF3705EVM Evaluation Module

This user's guide provides instructions for evaluating the TRF3705 modulator with a TRF3705EVM evaluation module. The TRF3705 is a quadrature modulator for up-converting the in-phase (I) and quadrature-phase (Q) signals to RF signals in the transmit chain, typically used between the digital-to-analog converter and the RF power amplifier.

Contents

1 Introduction 2
1.1 System Block Diagram 2
1.2 EVM Jumper Configuration 2
2 TRF3705 EVM Test Configuration 3
2.1 Test Block Diagram 3
2.2 Test Equipment 3
2.3 Calibration 3
3 EVM Test Procedure 4
3.1 Single-Tone Output Power Test 4
3.2 Two-Tone OIP3 Test 5

List of Figures

1 TRF3705 System Block Diagram 2
2 Test Setup Block Diagram 3
3 Two-Tone OIP3 Output Spectrum 5

List of Tables

1 Default Jumper Connections 2

Copyright © 2011, Texas Instruments Incorporated

1 Introduction

1.1 System Block Diagram

The basic radio system block diagram in Figure 1 shows where the TRF3705 fits in the transmitter.

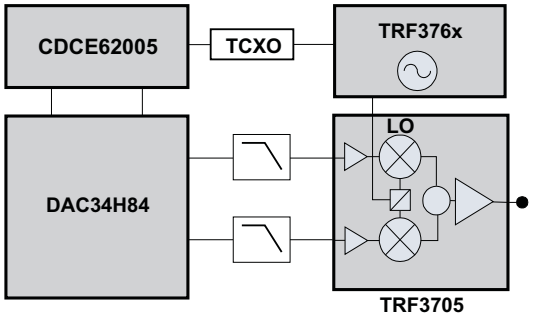

Figure 1. TRF3705 System Block Diagram

1.2 EVM Jumper Configuration

Table 1 lists the locations of the installed jumpers in the default configuration of the evaluation module (EVM).

Table 1. Default Jumper Connections

Jumper	Description	Default	Notes
JP1	Power Down	Pins 2-3	Powered On
JP2	Gain Control	Pins 2-3	Low Gain Mode

Copyright © 2011, Texas Instruments Incorporated

2 TRF3705 EVM Test Configuration

2.1 Test Block Diagram

Figure 2 shows the test setup for general testing of the TRF3705.

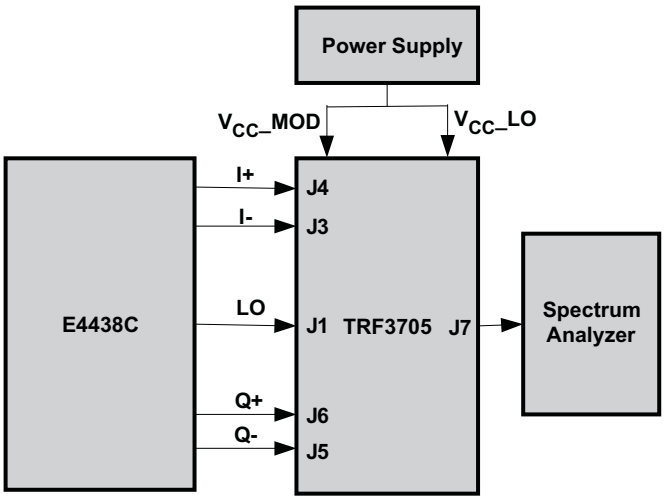

Figure 2. Test Setup Block Diagram

2.2 Test Equipment

The following equipment is required for completing RF Testing:

- Power supply with current readout — Agilent E3631 or equivalent
- Signal generator for LO input signal — Agilent E4438C or equivalent
- Arbitrary waveform generator — Agilent E4438C or equivalent
- Spectrum analyzer — Agilent E4440A or equivalent

2.3 Calibration

The RF cables must be good quality RF cables due to the high-frequency signals.

- Measure the insertion loss of the RF output cable, and use this value to compensate for the measured output power.
- Measure the insertion loss of the LO input cable, and use this value to compensate for the desired LO power.

Copyright © 2011, Texas Instruments Incorporated

3 EVM Test Procedure

3.1 Single-Tone Output Power Test

1. Connect power supplies:
   - Set V_{CC} supply to 3.3 V and set the current limit to 500 mA.
   - Connect the V_{CC} supply to header TP2. Connect the ground to TP1.
2. Use a suitable 50-Ω output signal generator to supply the LO signal with 0 dBm with the cable loss compensated and the desired frequency f_{LO} = 1 GHz to J1; terminate J2 with 50 Ω to ground.
3. Use a digital-to-analog converter or an arbitrary waveform generator to provide I/Q input signals. A typical setup is as follows: a 1-Vpp sinusoidal wave in differential mode for both I and Q signals with a frequency of f_1, a dc offset of 0.25 V, and an output impedance of 50 Ω. Use an Agilent E4438C vector signal generator to provide I/Q signals in the following example.
   - Press **Preset.**
   - Press **Mode → More (1 of 2) → Multitone.**
   - Press **Initialize Table → Number of Tones → 12 → Enter.**
   - Press **Freq Spacing → 1 → MHz.**
   - Press **Done.**
   - Highlight each row of the first 11 rows, and press **Toggle State** to turn the selected tone off; keep only the last row with the BB frequency of 5.5 MHz. Now, 5.5-MHz, single-tone, BB I/Q signals are configured for E4438C.
   - Press **Multitone Off/On** until On is highlighted to generate the multitone waveform.
   - Connect I signals to J4 (I+) and J3 (I–), and the Q signals to J5 (Q–) and J6 (Q+).
   - Adjust the differential I or Q voltage level to be 1 Vpp by pressing **Mode → I/Q → I/Q Output Control → I/Q Output Atten** → enter **9** → Press **dB**. The voltage can be measured by an oscilloscope. Note that the differential voltage is twice the single-ended voltage.
   - Set the common-mode voltage (CMV) of E4438A to 0.25 V by pressing **Mode → I/Q → I/Q Output Control → Common Mode I/Q Offset → 250 → mV**. Use a dc voltage meter to monitor the dc common voltage at the inputs of I and Q, and fine-tune the CMV setting until it is measured to be 250 mV.
4. Verify that jumper connection of pin 2 and pin 3 on JP2 to set device in low gain mode
5. Verify that jumper connection of pin 2 and pin 3 at JP1 to ensure that power down is not engaged.
6. Monitor Vcc at TP1 to ensure that Vcc is 3.3 V. Verify that the current draw is about 305 mA ± 15 mA.
7. Connect a spectrum analyzer to the SMA connector marked RFOUT (J7), and measure the TRF3705 output power at $f_{LO} + f_1$ = 1005.5 MHz. The RF power must be 3.5 dBm ± 1 dBm after the RF cable loss is compensated.

Copyright © 2011, Texas Instruments Incorporated

3.2 Two-Tone OIP3 Test

The output third-order intercept point (OIP3) is a measure of the linearity performance of a nonlinear device. It is measured by a two-tone test. The following exercise measures OIP3 following all listed steps in Section 3.1.

1. Press **Mode** → **More (1 of 2)** → **Multitone**.
2. Highlight row 11 for frequency offset = 4.5 MHz, press **Toggle State**, and then press **Apply Multitone** to turn on a 4.5-MHz tone. Now, two tones with equal amplitude and frequencies, f_1 = 4.5 and f_2 = 5.5 MHz, are configured for E4438C.
3. Measure the RF power of both RF tones, P_0, which must be between –1.8 dBm to –2.8 dBm.
4. Measure the power, P_{IM3}, of the third-order intermodulation product associated with each RF tone. It is approximately –66.5 dBm after the cable loss compensation.
5. OIP_3 can be calculated by the equation $OIP_3 = P_0 + (P_0 – P_{IM3})/2$. The worst OIP3 associated with either the low- or the high-frequency tone is selected as the OIP3 of the modulator. The OIP3 at 1 GHz is approximately –29.8 dBm ± 1 dBm. Caution must be taken for accurately measuring the small P_{IM3} when the large P_0 is present. It is helpful to reduce the span and RBW settings of the spectrum analyzer so that the IM3 component is at least 20 dB above the noise floor, as well as by increasing the RF attenuator setting until P_{IM3} is no longer varying with increased RF attenuation setting.

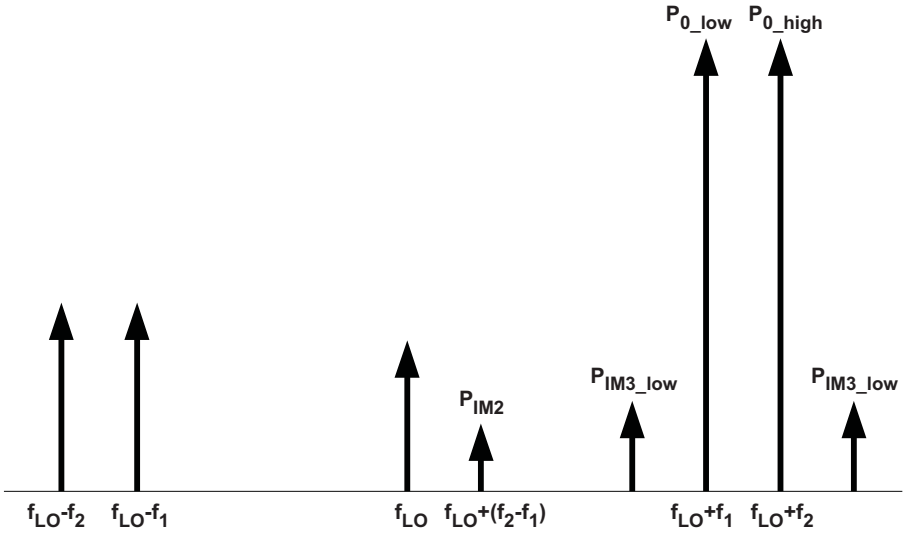

Figure 3. Two-Tone OIP3 Output Spectrum

Copyright © 2011, Texas Instruments Incorporated

Evaluation Board/Kit Important Notice

Texas Instruments (TI) provides the enclosed product(s) under the following conditions:

This evaluation board/kit is intended for use for **ENGINEERING DEVELOPMENT, DEMONSTRATION, OR EVALUATION PURPOSES ONLY** and is not considered by TI to be a finished end-product fit for general consumer use. Persons handling the product(s) must have electronics training and observe good engineering practice standards. As such, the goods being provided are not intended to be complete in terms of required design-, marketing-, and/or manufacturing-related protective considerations, including product safety and environmental measures typically found in end products that incorporate such semiconductor components or circuit boards. This evaluation board/kit does not fall within the scope of the European Union directives regarding electromagnetic compatibility, restricted substances (RoHS), recycling (WEEE), FCC, CE or UL, and therefore may not meet the technical requirements of these directives or other related directives.

Should this evaluation board/kit not meet the specifications indicated in the User's Guide, the board/kit may be returned within 30 days from the date of delivery for a full refund. THE FOREGOING WARRANTY IS THE EXCLUSIVE WARRANTY MADE BY SELLER TO BUYER AND IS IN LIEU OF ALL OTHER WARRANTIES, EXPRESSED, IMPLIED, OR STATUTORY, INCLUDING ANY WARRANTY OF MERCHANTABILITY OR FITNESS FOR ANY PARTICULAR PURPOSE.

The user assumes all responsibility and liability for proper and safe handling of the goods. Further, the user indemnifies TI from all claims arising from the handling or use of the goods. Due to the open construction of the product, it is the user's responsibility to take any and all appropriate precautions with regard to electrostatic discharge.

EXCEPT TO THE EXTENT OF THE INDEMNITY SET FORTH ABOVE, NEITHER PARTY SHALL BE LIABLE TO THE OTHER FOR ANY INDIRECT, SPECIAL, INCIDENTAL, OR CONSEQUENTIAL DAMAGES.

TI currently deals with a variety of customers for products, and therefore our arrangement with the user **is not exclusive.**

TI assumes **no liability for applications assistance, customer product design, software performance, or infringement of patents or services described herein.**

Please read the User's Guide and, specifically, the Warnings and Restrictions notice in the User's Guide prior to handling the product. This notice contains important safety information about temperatures and voltages. For additional information on TI's environmental and/or safety programs, please contact the TI application engineer or visit www.ti.com/esh.

No license is granted under any patent right or other intellectual property right of TI covering or relating to any machine, process, or combination in which such TI products or services might be or are used.

FCC Warning

This evaluation board/kit is intended for use for **ENGINEERING DEVELOPMENT, DEMONSTRATION, OR EVALUATION PURPOSES ONLY** and is not considered by TI to be a finished end-product fit for general consumer use. It generates, uses, and can radiate radio frequency energy and has not been tested for compliance with the limits of computing devices pursuant to part 15 of FCC rules, which are designed to provide reasonable protection against radio frequency interference. Operation of this equipment in other environments may cause interference with radio communications, in which case the user at his own expense will be required to take whatever measures may be required to correct this interference.

EVM Warnings and Restrictions

It is important to operate this EVM within the input voltage range of 0 V to 3.6 V and the output voltage range of 0 V to 3.6 V .

Exceeding the specified input range may cause unexpected operation and/or irreversible damage to the EVM. If there are questions concerning the input range, please contact a TI field representative prior to connecting the input power.

Applying loads outside of the specified output range may result in unintended operation and/or possible permanent damage to the EVM. Please consult the EVM User's Guide prior to connecting any load to the EVM output. If there is uncertainty as to the load specification, please contact a TI field representative.

During normal operation, some circuit components may have case temperatures greater than 55° C. The EVM is designed to operate properly with certain components above 55° C as long as the input and output ranges are maintained. These components include but are not limited to linear regulators, switching transistors, pass transistors, and current sense resistors. These types of devices can be identified using the EVM schematic located in the EVM User's Guide. When placing measurement probes near these devices during operation, please be aware that these devices may be very warm to the touch.

Mailing Address: Texas Instruments, Post Office Box 655303, Dallas, Texas 75265
Copyright © 2011, Texas Instruments Incorporated

IMPORTANT NOTICE

Texas Instruments Incorporated and its subsidiaries (TI) reserve the right to make corrections, modifications, enhancements, improvements, and other changes to its products and services at any time and to discontinue any product or service without notice. Customers should obtain the latest relevant information before placing orders and should verify that such information is current and complete. All products are sold subject to TI's terms and conditions of sale supplied at the time of order acknowledgment.

TI warrants performance of its hardware products to the specifications applicable at the time of sale in accordance with TI's standard warranty. Testing and other quality control techniques are used to the extent TI deems necessary to support this warranty. Except where mandated by government requirements, testing of all parameters of each product is not necessarily performed.

TI assumes no liability for applications assistance or customer product design. Customers are responsible for their products and applications using TI components. To minimize the risks associated with customer products and applications, customers should provide adequate design and operating safeguards.

TI does not warrant or represent that any license, either express or implied, is granted under any TI patent right, copyright, mask work right, or other TI intellectual property right relating to any combination, machine, or process in which TI products or services are used. Information published by TI regarding third-party products or services does not constitute a license from TI to use such products or services or a warranty or endorsement thereof. Use of such information may require a license from a third party under the patents or other intellectual property of the third party, or a license from TI under the patents or other intellectual property of TI.

Reproduction of TI information in TI data books or data sheets is permissible only if reproduction is without alteration and is accompanied by all associated warranties, conditions, limitations, and notices. Reproduction of this information with alteration is an unfair and deceptive business practice. TI is not responsible or liable for such altered documentation. Information of third parties may be subject to additional restrictions.

Resale of TI products or services with statements different from or beyond the parameters stated by TI for that product or service voids all express and any implied warranties for the associated TI product or service and is an unfair and deceptive business practice. TI is not responsible or liable for any such statements.

TI products are not authorized for use in safety-critical applications (such as life support) where a failure of the TI product would reasonably be expected to cause severe personal injury or death, unless officers of the parties have executed an agreement specifically governing such use. Buyers represent that they have all necessary expertise in the safety and regulatory ramifications of their applications, and acknowledge and agree that they are solely responsible for all legal, regulatory and safety-related requirements concerning their products and any use of TI products in such safety-critical applications, notwithstanding any applications-related information or support that may be provided by TI. Further, Buyers must fully indemnify TI and its representatives against any damages arising out of the use of TI products in such safety-critical applications.

TI products are neither designed nor intended for use in military/aerospace applications or environments unless the TI products are specifically designated by TI as military-grade or "enhanced plastic." Only products designated by TI as military-grade meet military specifications. Buyers acknowledge and agree that any such use of TI products which TI has not designated as military-grade is solely at the Buyer's risk, and that they are solely responsible for compliance with all legal and regulatory requirements in connection with such use.

TI products are neither designed nor intended for use in automotive applications or environments unless the specific TI products are designated by TI as compliant with ISO/TS 16949 requirements. Buyers acknowledge and agree that, if they use any non-designated products in automotive applications, TI will not be responsible for any failure to meet such requirements.

Following are URLs where you can obtain information on other Texas Instruments products and application solutions:

Products		**Applications**	
Audio	www.ti.com/audio	Communications and Telecom	www.ti.com/communications
Amplifiers	amplifier.ti.com	Computers and Peripherals	www.ti.com/computers
Data Converters	dataconverter.ti.com	Consumer Electronics	www.ti.com/consumer-apps
DLP® Products	www.dlp.com	Energy and Lighting	www.ti.com/energy
DSP	dsp.ti.com	Industrial	www.ti.com/industrial
Clocks and Timers	www.ti.com/clocks	Medical	www.ti.com/medical
Interface	interface.ti.com	Security	www.ti.com/security
Logic	logic.ti.com	Space, Avionics and Defense	www.ti.com/space-avionics-defense
Power Mgmt	power.ti.com	Transportation and Automotive	www.ti.com/automotive
Microcontrollers	microcontroller.ti.com	Video and Imaging	www.ti.com/video
RFID	www.ti-rfid.com		
OMAP Mobile Processors	www.ti.com/omap		
Wireless Connectivity	www.ti.com/wirelessconnectivity		
	TI E2E Community Home Page		e2e.ti.com

Mailing Address: Texas Instruments, Post Office Box 655303, Dallas, Texas 75265
Copyright © 2011, Texas Instruments Incorporated