Surface Mount Automotive Transient Voltage Suppressors

High Temperature Stability and High Reliability Conditions



* Patent #'s
4,980,315
5,166,769
5,278,094

DO-214AB (SMC)

FEATURES

- Patented PAR® construction
- Available in uni-directional polarity only
- 1500 W peak pulse power capability with a 10/1000 µs waveform
- Excellent clamping capability
- Very fast response time
- Low incremental surge resistance
- Meets MSL level 1, per J-STD-020, LF maximum peak of 260 °C
- Solder dip 260 °C, 40 s
- Component in accordance to RoHS 2002/95/EC and WEEE 2002/96/EC

RoHS COMPLIANT

TYPICAL APPLICATIONS

Use in sensitive electronics protection against voltage transients induced by inductive load switching and lighting on ICs, MOSFET, signal lines of sensor units for consumer, computer, industrial, automotive and telecommunication.

PRIMARY CHARACTERISTICS	
V_{BR}	6.8 V to 47 V
P_{PPM}	1500 W
I_{FSM}	200 A
T_J max.	185 °C

MECHANICAL DATA

Case: DO-214AB (SMC)

Molding compound meets UL 94 V-0 flammability rating

Base P/NHE3 - RoHS compliant, high reliability/ automotive grade (AEC Q101 qualified)

Terminals: Matte tin plated leads, solderable per J-STD-002 and JESD22-B102

HE3 suffix meets JESD 201 class 2 whisker test

Polarity: Color band denotes cathode end

MAXIMUM RATINGS (T_A = 25 °C unless otherwise noted)			
PARAMETER	**SYMBOL**	**VALUE**	**UNIT**
Peak pulse power dissipation with a 10/1000 µs waveform (1)(2) (Fig. 3)	P_{PPM}	1500	W
Peak power pulse current with a 10/1000 µs waveform (1) (Fig. 1)	I_{PPM}	See next table	A
Peak forward surge current 8.3 ms single half sine-wave (2)(3)	I_{FSM}	200	A
Maximum instantaneous forward voltage at 100 A (2)(3)	V_F	3.5	V
Operating junction and storage temperature range	T_J, T_{STG}	- 65 to + 185	°C

Notes:

(1) Non-repetitive current pulse, per Fig. 3 and derated above T_A = 25 °C per Fig. 2

(2) Mounted on 0.31 x 0.31" (8.0 x 8.0 mm) copper pads at each terminal

(3) Measured on 8.3 ms single half sine-wave, or equivalent square wave, duty cycle = 4 pulses per minute maximum

ELECTRICAL CHARACTERISTICS (T_A = 25 °C unless otherwise noted)									
DEVICE TYPE	**DEVICE MARKING CODE**	**BREAKDOWN VOLTAGE V_{BR} (1) AT I_T (V)**		**TEST CURRENT I_T (mA)**	**STAND-OFF VOLTAGE V_{WM} (V)**	**MAXIMUM REVERSE LEAKAGE AT V_{WM} I_R (µA)**	**T_J = 150 °C MAXIMUM REVERSE LEAKAGE AT V_{WM} I_D (µA)**	**MAXIMUM PEAK PULSE SURGE CURRENT I_{PPM} (2) (A)**	**MAXIMUM CLAMPING VOLTAGE AT I_{PPM} V_C (V)**
		MIN.	**MAX.**						
TPSMC6.8	DDP	6.12	7.48	10.0	5.50	1000	10000	139.0	10.8
TPSMC6.8A	DEP	6.45	7.14	10.0	5.80	1000	10000	143.0	10.5
TPSMC7.5	DFP	6.75	8.25	10.0	6.05	500	5000	128.0	11.7
TPSMC7.5A	DGP	7.13	7.88	10.0	6.40	500	5000	133.0	11.3
TPSMC8.2	DHP	7.38	9.02	10.0	6.63	200	2000	120.0	12.5
TPSMC8.2A	DKP	7.79	8.61	10.0	7.02	200	2000	124.0	12.1
TPSMC9.1	DLP	8.19	10.0	1.0	7.37	50	500	109.0	13.8
TPSMC9.1A	DMP	8.65	9.55	1.0	7.78	50	500	112.0	13.4
TPSMC10	DNP	9.00	11.0	1.0	8.10	20	200	100.0	15.0
TPSMC10A	DPP	9.50	10.5	1.0	8.55	20	200	103.0	14.5
TPSMC11	DQP	9.90	12.1	1.0	8.92	5.0	50	92.6	16.2
TPSMC11A	DRP	10.5	11.6	1.0	9.40	5.0	50	96.2	15.6
TPSMC12	DSP	10.8	13.2	1.0	9.72	2.0	10	86.7	17.3
TPSMC12A	DTP	11.4	12.6	1.0	10.2	2.0	10	89.8	16.7
TPSMC13	DUP	11.7	14.3	1.0	10.5	2.0	10	78.9	19.0
TPSMC13A	DVP	12.4	13.7	1.0	11.1	2.0	10	82.4	18.2
TPSMC15	DWP	13.5	16.5	1.0	12.1	1.0	10	68.2	22.0
TPSMC15A	DXP	14.3	15.8	1.0	12.8	1.0	10	70.8	21.2
TPSMC16	DYP	14.4	17.6	1.0	12.9	1.0	10	63.8	23.5
TPSMC16A	DZP	15.2	16.8	1.0	13.6	1.0	10	66.7	22.5
TPSMC18	EDP	16.2	19.8	1.0	14.5	1.0	10	56.6	26.5
TPSMC18A	EEP	17.1	18.9	1.0	15.3	1.0	10	59.5	25.2
TPSMC20	EFP	18.0	22.0	1.0	16.2	1.0	10	51.5	29.1
TPSMC20A	EGP	19.0	21.0	1.0	17.1	1.0	10	54.2	27.7
TPSMC22	EHP	19.8	24.2	1.0	17.8	1.0	10	47.0	31.9
TPSMC22A	EKP	20.9	23.1	1.0	18.8	1.0	10	49.0	30.6
TPSMC24	ELP	21.6	26.4	1.0	19.4	1.0	10	43.2	34.7
TPSMC24A	EMP	22.8	25.2	1.0	20.5	1.0	10	45.2	33.2
TPSMC27	ENP	24.3	29.7	1.0	21.8	1.0	10	38.4	39.1
TPSMC27A	EPP	25.7	28.4	1.0	23.1	1.0	10	40.0	37.5
TPSMC30	EQP	27.0	33.0	1.0	24.3	1.0	10	34.5	43.5
TPSMC30A	ERP	28.5	31.5	1.0	25.6	1.0	10	36.2	41.4
TPSMC33	ESP	29.7	36.3	1.0	26.8	1.0	10	31.4	47.7
TPSMC33A	ETP	31.4	34.7	1.0	28.2	1.0	10	32.8	45.7
TPSMC36	EUP	32.4	39.6	1.0	29.1	1.0	15	28.8	52.0
TPSMC36A	EVP	34.2	37.8	1.0	30.8	1.0	15	30.1	49.9
TPSMC39	EWP	35.1	42.9	1.0	31.6	1.0	15	26.6	56.4
TPSMC39A	EXP	37.1	41.0	1.0	33.3	1.0	15	27.8	53.9
TPSMC43	EYP	38.7	47.3	1.0	34.8	1.0	20	24.2	61.9
TPSMC43A	EZP	40.9	45.2	1.0	36.8	1.0	20	25.3	59.3
TPSMC47	FDP	42.3	51.7	1.0	38.1	1.0	20	22.1	67.8
TPSMC47A	FEP	44.7	49.4	1.0	40.2	1.0	20	23.1	64.8

Notes:

(1) V_{BR} measured after I_T applied for 300 µs, I_T = square wave pulse or equivalent

(2) Surge current waveform per Fig. 3 and derated per Fig. 2

(3) All terms and symbols are consistent with ANSI/IEEE C62.35

ORDERING INFORMATION (Example)				
PREFERRED P/N	UNIT WEIGHT (g)	PREFERRED PACKAGE CODE	BASE QUANTITY	DELIVERY MODE
TPSMC6.8AHE3/57T (1)	0.211	57T	850	7" diameter plastic tape and reel
TPSMC6.8AHE3/9AT (1)	0.211	9AT	3500	13" diameter plastic tape and reel

Note:

(1) Automotive grade AEC Q101 qualified

RATINGS AND CHARACTERISTICS CURVES

(T_A = 25 °C unless otherwise noted)

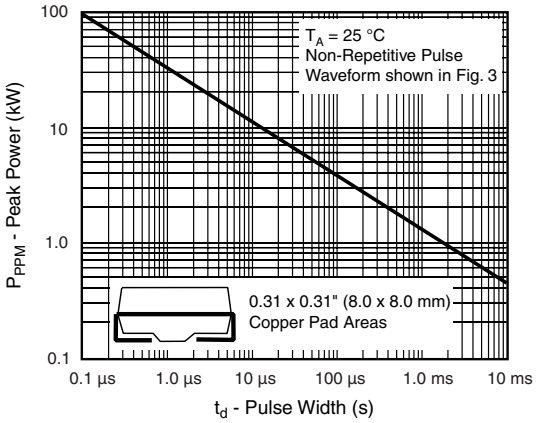

Figure 1. Peak Pulse Power Rating Curve

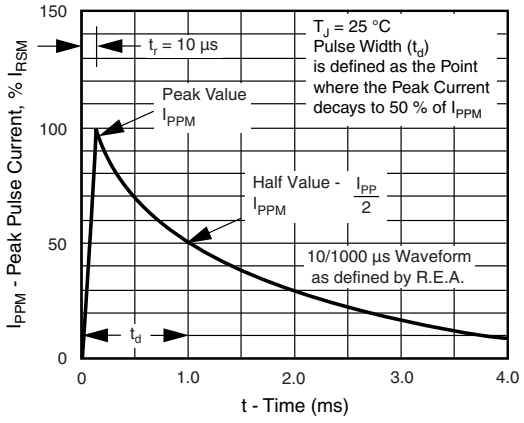

Figure 3. Pulse Waveform

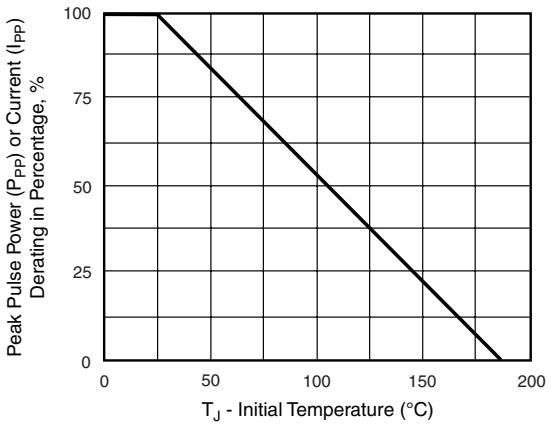

Figure 2. Pulse Power or Current vs. Initial Junction Temperature

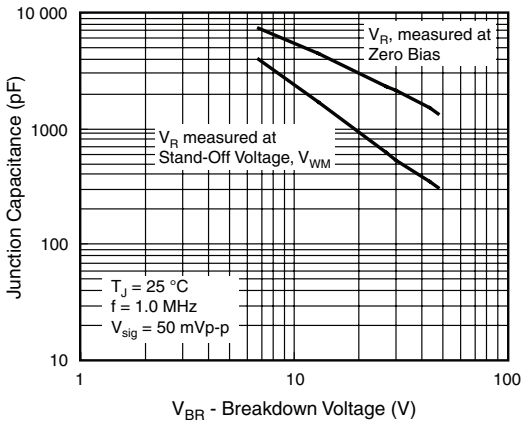

Figure 4. Typical Junction Capacitance

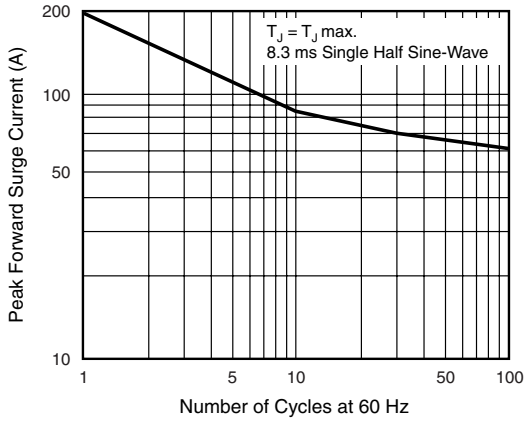

Figure 5. Maximum Non-Repetitive/Peak Forward Surge Current

PACKAGE OUTLINE DIMENSIONS in inches (millimeters)

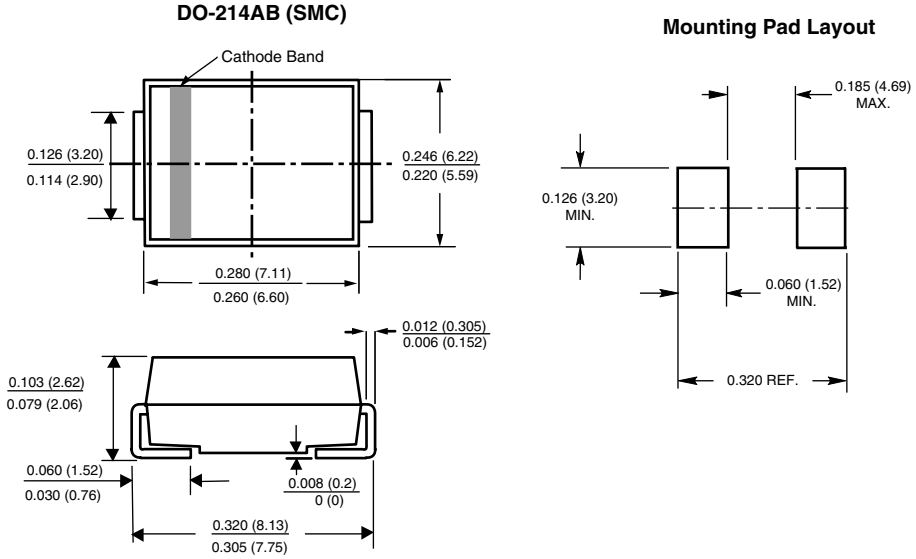

Disclaimer

All product specifications and data are subject to change without notice.

Vishay Intertechnology, Inc., its affiliates, agents, and employees, and all persons acting on its or their behalf (collectively, “Vishay”), disclaim any and all liability for any errors, inaccuracies or incompleteness contained herein or in any other disclosure relating to any product.

Vishay disclaims any and all liability arising out of the use or application of any product described herein or of any information provided herein to the maximum extent permitted by law. The product specifications do not expand or otherwise modify Vishay’s terms and conditions of purchase, including but not limited to the warranty expressed therein, which apply to these products.

No license, express or implied, by estoppel or otherwise, to any intellectual property rights is granted by this document or by any conduct of Vishay.

The products shown herein are not designed for use in medical, life-saving, or life-sustaining applications unless otherwise expressly indicated. Customers using or selling Vishay products not expressly indicated for use in such applications do so entirely at their own risk and agree to fully indemnify Vishay for any damages arising or resulting from such use or sale. Please contact authorized Vishay personnel to obtain written terms and conditions regarding products designed for such applications.

Product names and markings noted herein may be trademarks of their respective owners.