ULTRALOW-NOISE, HIGH-PSRR, FAST RF 200-mA LOW-DROPOUT LINEAR REGULATORS

FEATURES

- **Controlled Baseline**
  - **One Assembly/Test Site, One Fabrication Site**
- **Enhanced Diminishing Manufacturing Sources (DMS) Support**
- **Enhanced Product-Change Notification**
- **Qualification Pedigree** (1)
- **200-mA Low-Dropout Regulator With EN**
- **Available in 1.8 V, 2.5 V, 2.8 V, 2.85 V, 3 V, 3.3 V, 4.75 V, and Adjustable**
- **High PSRR (70 dB at 10 kHz)**
- **Ultralow Noise (32 μV)**
- **Fast Start-Up Time (50 μs)**
- **Stable With a 2.2-μF Ceramic Capacitor**
- **Excellent Load/Line Transient**
- **Very Low Dropout Voltage (112 mV at Full Load, TPS79330)**
- **5-Pin SOT23 (DBV) Package**

APPLICATIONS

- **VCOs**
- **RF**
- **Bluetooth™, Wireless LAN**

(1) Component qualification in accordance with JEDEC and industry standards to ensure reliable operation over specified temperature range. This includes, but is not limited to, Highly Accelerated Stress Test (HAST) or biased 85/85, temperature cycle, autoclave or unbiased HAST, electromigration, bond intermetallic life, and mold compound life. Such qualification testing should not be viewed as justifying use of this component beyond specified performance and environmental limits.

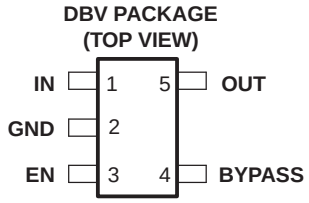

Fixed Option

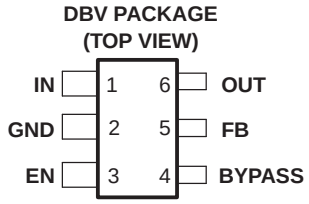

Adjustable Option

DESCRIPTION

The TPS793xx family of low-dropout (LDO) low-power linear voltage regulators features high power-supply rejection ratio (PSRR), ultralow noise, fast start-up, and excellent line and load transient responses in a small-outline SOT23 package. Each device in the family is stable, with a small 2.2-μF ceramic capacitor on the output. The TPS793xx family uses an advanced, proprietary, BiCMOS fabrication process to yield extremely low dropout voltages (e.g., 112 mV at 200 mA, TPS79330). Each device achieves fast start-up times (approximately 50 μs with a 0.001-μF bypass capacitor), while consuming very low quiescent current (170 μA typical). Moreover, when the device is placed in standby mode, the supply current is reduced to less than 1 μA. The TPS79328 exhibits approximately 32 μV_{RMS} of output voltage noise with a 0.1-μF bypass capacitor. Applications with analog components that are noise sensitive, such as portable RF electronics, benefit from the high PSRR and low-noise features, as well as the fast response time.

Please be aware that an important notice concerning availability, standard warranty, and use in critical applications of Texas Instruments semiconductor products and disclaimers thereto appears at the end of this data sheet.

Bluetooth is a trademark of Bluetooth SIG, Inc.

PRODUCTION DATA information is current as of publication date. Products conform to specifications per the terms of the Texas Instruments standard warranty. Production processing does not necessarily include testing of all parameters.

Copyright © 2003–2006, Texas Instruments Incorporated

TPS79328
RIPPLE REJECTION vs FREQUENCY

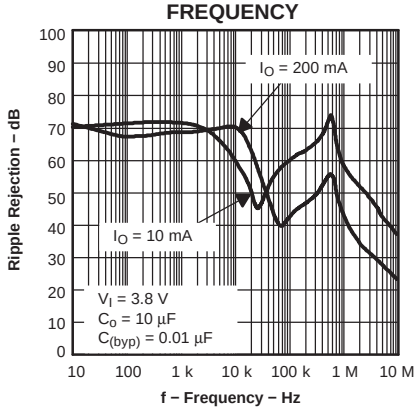

TPS79328
OUTPUT SPECTRAL NOISE DENSITY vs FREQUENCY

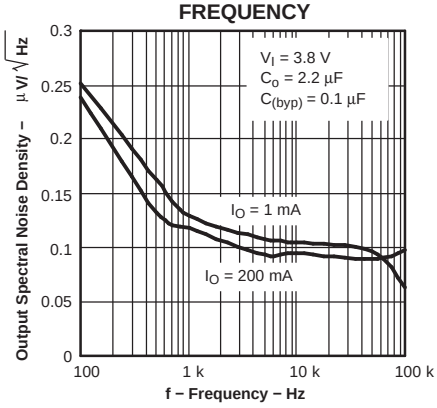

AVAILABLE OPTIONS

T_J	VOLTAGE	PACKAGE	PART NUMBER	SYMBOL
–40°C to 125°C	1.2 to 5.5 V	SOT23 (DBV)	TPS79301DBVREP(1)	PGVE
	1.8 V		TPS79318DBVREP(1)	PHHE
	2.5 V		TPS79325DBVREP(1)	PGWE
	2.8 V		TPS79328DBVREP(1)(2)	PGXE
	2.85 V		TPS793285DBVREP(1)(2)	PHIE
	3 V		TPS79330DBVREP(1)(2)	PGYE
	3.3 V		TPS793333DBVREP(1)	PHUE
	4.75 V		TPS793475DBVREP(1)	PHJE
–55°C to 125°C	1.2 to 5.5 V		TPS79301MDBVREP(1)	PMBM

(1) The DBVR indicates tape and reel of 3000 parts.
(2) Product preview

ABSOLUTE MAXIMUM RATINGS(1)

over operating free-air temperature range (unless otherwise noted)

			MIN	MAX	UNIT
	Input voltage range(2)		–0.3	6	V
	Voltage range at EN		–0.3	V_I + 0.3	V
	Voltage on OUT		–0.3	6	V
	Peak output current			Internally limited	
	ESD rating	Human-Body Model (HBM)		2	kV
		Changed-Device Model (CDM)		500	V
	Continuous total power dissipation			See Dissipation Rating Table	
T_J	Operating virtual junction temperature range		–55	125	°C
T_{stg}	Storage temperature range		–65	150	°C

(1) Stresses beyond those listed under "absolute maximum ratings" may cause permanent damage to the device. These are stress ratings only, and functional operation of the device at these or any other conditions beyond those indicated under "recommended operating conditions" is not implied. Exposure to absolute-maximum-rated conditions for extended periods may affect device reliability.
(2) All voltage values are with respect to network ground terminal

Dissipation Ratings

BOARD	PACKAGE	$R_{\theta JC}$	$R_{\theta JA}$	DERATING FACTOR ABOVE T_A = 25°C	$T_A \le 25°C$ POWER RATING	T_A = 70°C POWER RATING	T_A = 85°C POWER RATING
Low K(1)	DBV	63.75°C/W	256°C/W	3.906 mW/°C	391 mW	215 mW	156 mW
High K(2)	DBV	63.75°C/W	178.3°C/W	5.609 mW/°C	561 mW	308 mW	224 mW

(1) The JEDEC low K (1s) board design used to derive this data was a 3-in × 3-in, two layer board with 2-oz copper traces on top of the board.
(2) The JEDEC high K (2s2p) board design used to derive this data was a 3-in × 3-in, multilayer board with 1-oz internal power and ground planes and 2-oz copper traces on top and bottom of the board.

ELECTRICAL CHARACTERISTICS

over recommended operating free-air temperature range, EN = V_I, T_J = –55 to 125°C and T_J = –40 to 125°C, V_I = $V_{O(typ)}$ + 1 V, I_O = 1 mA, C_o = 10 µF, $C_{(byp)}$ = 0.01 µF (unless otherwise noted)

PARAMETER		TEST CONDITIONS		MIN	TYP	MAX	UNIT
V_I Input voltage(1)				2.7		5.5	V
I_O Continuous output current(2)				0		200	mA
T_J Operating junction temperature				–55		125	°C
Output voltage	TPS79301	0 µA < I_O < 200 mA, 1.22 V ≤ V_O ≤ 5.2 V (3)	T_J = –40 to 125°C,	0.98 Vo		1.02 Vo	V
		0 µA < I_O < 200 mA, 1.22 V ≤ V_O ≤ 5.2 V (3)	T_J = –55 to 125°C,	0.97 Vo		1.025 Vo	
	TPS79318	T_J = 25°C			1.8		
		0 µA < I_O < 200 mA,	2.8 V < V_I < 5.5 V	1.764		1.836	
	TPS79325	T_J = 25°C			2.5		
		0 µA < I_O < 200 mA,	3.5 V < V_I < 5.5 V	2.45		2.55	
	TPS79328	T_J = 25°C			2.8		
		0 µA < I_O < 200 mA,	3.8 V < V_I < 5.5 V	2.744		2.856	
	TPS793285	T_J = 25°C			2.85		
		0 µA < I_O < 200 mA,	3.85 V < V_I < 5.5 V	2.793		2.907	
	TPS79330	T_J = 25°C			3		
		0 µA < I_O < 200 mA,	4 V < V_I < 5.5 V	2.94		3.06	
	TPS79333	T_J = 25°C			3.3		
		0 µA < I_O < 200 mA,	4.3 V < V_I < 5.5 V	3.234		3.366	
	TPS793475	T_J = 25°C			4.75		
		0 µA < I_O < 200 mA,	5.25 V < V_I < 5.5 V	4.655		4.845	
Quiescent current (GND current)		0 µA < I_O < 200 mA,	T_J = 25°C		170		µA
		0 µA < I_O < 200 mA				220	
Load regulation		0 µA < I_O < 200 mA,	T_J = 25°C		5		mV
Output voltage line regulation ($\Delta V_O/V_O$)(4)		V_O + 1 V < V_I ≤ 5.5 V,	T_J = 25°C		0.05		%/V
		V_O + 1 V < V_I ≤ 5.5 V				0.12	
Output noise voltage (TPS79328)		BW = 200 Hz to 100 kHz, I_O = 200 mA, T_J = 25°C	$C_{(byp)}$ = 0.001 µF		55		μV_{RMS}
			$C_{(byp)}$ = 0.0047 µF		36		
			$C_{(byp)}$ = 0.01 µF		33		
			$C_{(byp)}$ = 0.1 µF		32		
Time, start-up (TPS79328)		R_L = 14 Ω, C_o = 1 µF, T_J = 25°C	$C_{(byp)}$ = 0.001 µF		50		µs
			$C_{(byp)}$ = 0.0047 µF		70		
			$C_{(byp)}$ = 0.01 µF		100		
Output current limit		V_O = 0 V(3)		285		600	mA
Standby current		EN = 0 V,	2.7 V < V_I < 5.5 V		0.07	1	µA
High-level enable input voltage		2.7 V < V_I < 5.5 V		2			V
Low-level enable input voltage		2.7 V < V_I < 5.5 V				0.7	V
Input current (EN)		EN = 0		–1		1	µA

(1) To calculate the minimum input voltage for your maximum output current, use the following formula:
$V_I(min) = V_O(max) + V_{DO}$ (max load)

(2) Continuous output current and operating junction temperature are limited by internal protection circuitry, but it is not recommended that the device operate under conditions beyond those specified in this table for extended periods of time.

(3) The minimum IN operating voltage is 2.7 V or $V_{O(typ)}$ + 1 V, whichever is greater. The maximum IN voltage is 5.5 V. The maximum output current is 200 mA.

(4) If V_O ≤ 2.5 V, then V_{Imin} = 2.7 V, V_{Imax} = 5.5 V:

$$\text{Line Reg. (mV)} = (\%/V) \times \frac{V_O\left(V_{Imax} - 2.7\ V\right)}{100} \times 1000$$

If V_O ≥ 2.5 V, then $V_{Imin} = V_O$ + 1 V, V_{Imax} = 5.5 V.

ELECTRICAL CHARACTERISTICS (continued)

over recommended operating free-air temperature range, EN = V_I, T_J = –55 to 125°C and T_J = –40 to 125°C, V_I = $V_{O(typ)}$ + 1 V, I_O = 1 mA, C_o = 10 µF, $C_{(byp)}$ = 0.01 µF (unless otherwise noted)

PARAMETER		TEST CONDITIONS		MIN	TYP	MAX	UNIT
Input current (FB) (TPS79301)		FB = 1.8 V				1	µA
Power-supply ripple rejection	TPS79328	f = 100 Hz, T_J = 25°C,	I_O = 10 mA		70		dB
		f = 100 Hz, T_J = 25°C,	I_O = 200 mA		68		
		f = 10 Hz, T_J = 25°C,	I_O = 200 mA		70		
		f = 100 Hz, T_J = 25°C,	I_O = 200 mA		43		
Dropout voltage(5)	TPS79328	I_O = 200 mA,	T_J = 25°C		120		mV
		I_O = 200 mA				200	
	TPS793285	I_O = 200 mA,	T_J= 25°C		120		
		I_O = 200 mA				200	
	TPS79330	I_O = 200 mA,	T_J = 25°C		112		
		I_O = 200 mA				200	
	TPS79333	I_O = 200 mA,	T_J = 25°C		102		
		I_O = 200 mA				180	
	TPS793475	I_O = 200 mA,	T_J = 25°C		77		
		I_O = 200 mA				125	
UVLO threshold		V_{CC} rising		2.25		2.65	V
UVLO hysteresis		T_J = 25°C	V_{CC} rising		100		mV

(5) IN voltage equals $V_{O(typ)}$– 100 mV; The TPS79325 dropout voltage is limited by the input voltage range limitations.

DEVICE INFORMATION

FUNCTIONAL BLOCK DIAGRAM – ADJUSTABLE VERSION

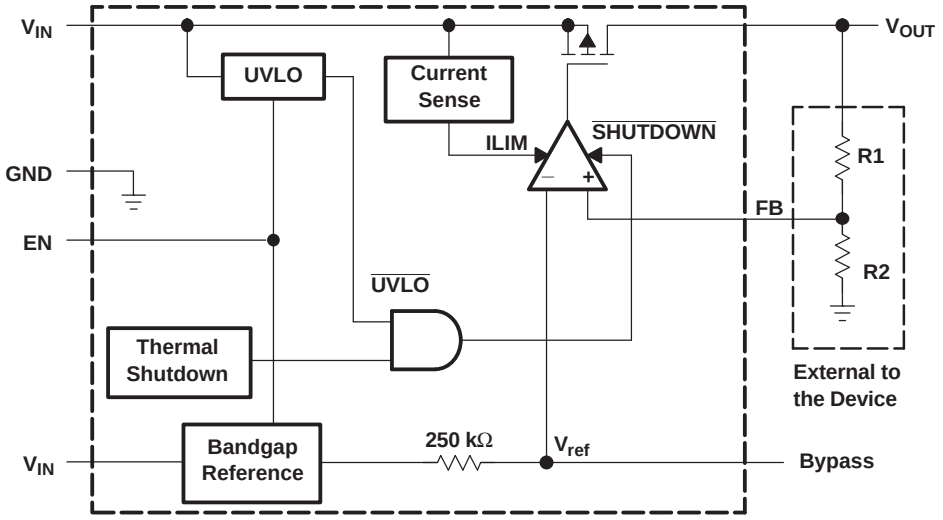

FUNCTIONAL BLOCK DIAGRAM – FIXED VERSION

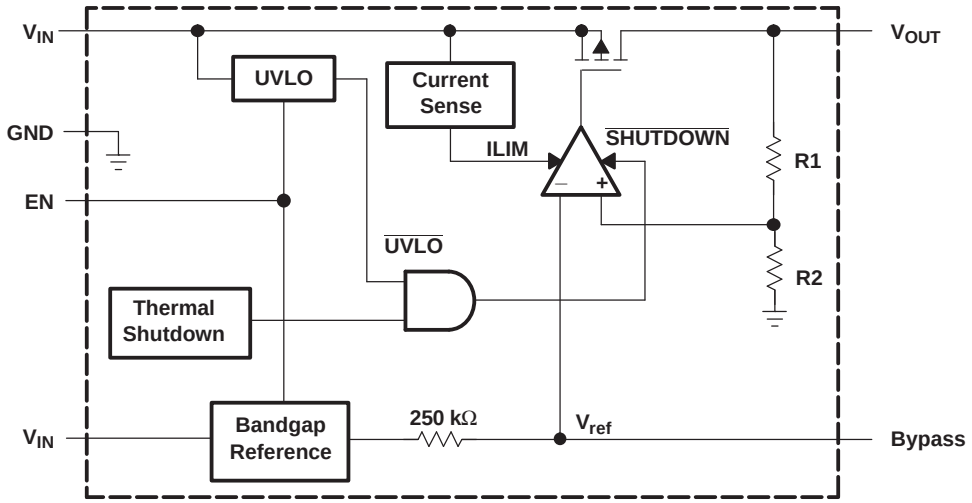

TERMINAL FUNCTIONS

TERMINAL			I/O	DESCRIPTION
NAME	ADJ	FIXED		
BYPASS	4	4		An external bypass capacitor, connected to this terminal, in conjunction with an internal resistor, creates a low-pass filter to further reduce regulator noise.
EN	3	3	I	Enable input that enables or shuts down the device. When EN goes to a logic high, the device is enabled. When the device goes to a logic low, the device is in shutdown mode.
FB	5	N/A	I	Feedback input voltage for the adjustable device
GND	2	2		Regulator ground
IN	1	1	I	Input to the device
OUT	6	5	O	Regulated output of the device

TYPICAL CHARACTERISTICS

TPS79328
OUTPUT VOLTAGE vs OUTPUT CURRENT

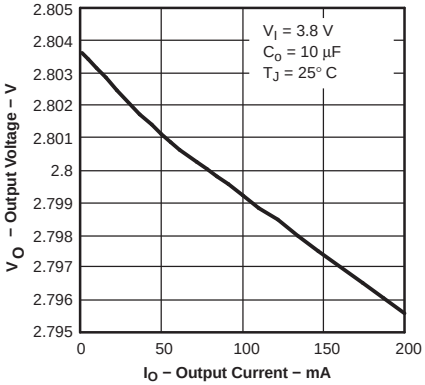

Figure 1.

TPS79328
OUTPUT VOLTAGE vs JUNCTION TEMPERATURE

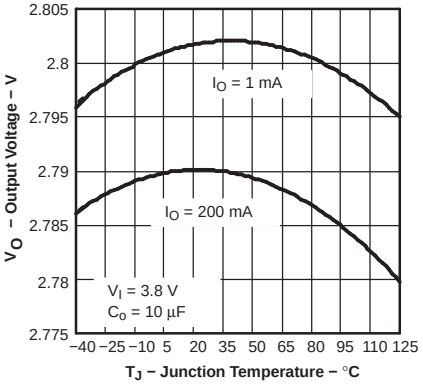

Figure 2.

TPS79328
GROUND CURRENT vs JUNCTION TEMPERATURE

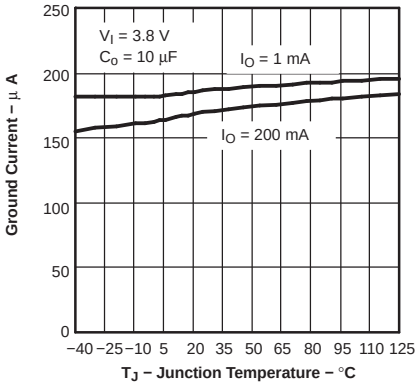

Figure 3.

TPS79328
OUTPUT SPECTRAL NOISE DENSITY vs FREQUENCY

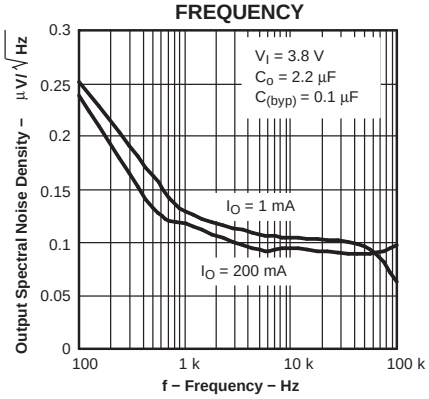

Figure 4.

TPS79328
OUTPUT SPECTRAL NOISE DENSITY vs FREQUENCY

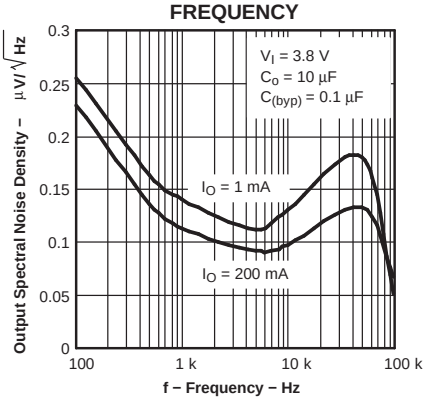

Figure 5.

TPS79328
OUTPUT SPECTRAL NOISE DENSITY vs FREQUENCY

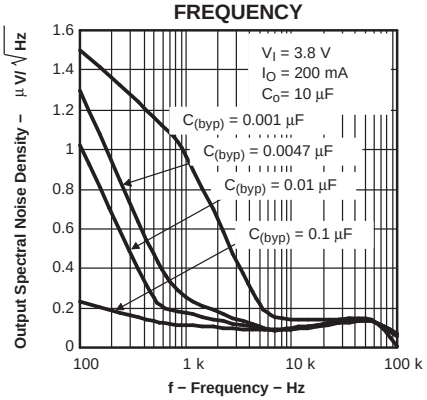

Figure 6.

ROOT MEAN SQUARED OUTPUT NOISE vs BYPASS CAPACITANCE

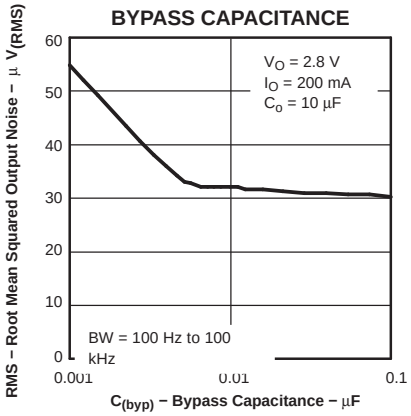

Figure 7.

OUTPUT IMPEDANCE vs FREQUENCY

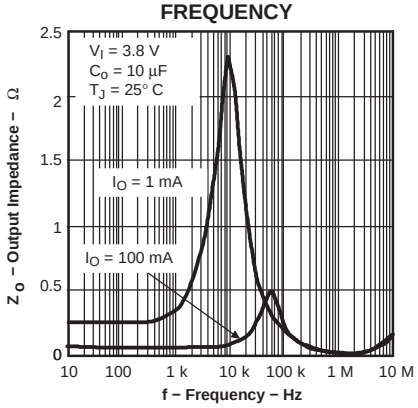

Figure 8.

TPS79328
DROPOUT VOLTAGE vs JUNCTION TEMPERATURE

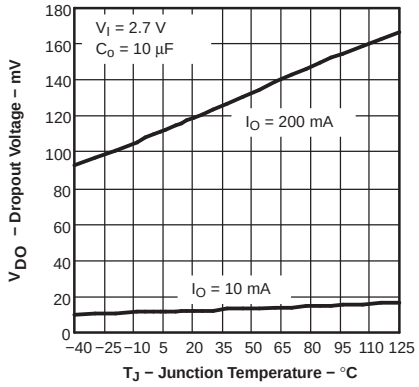

Figure 9.

TYPICAL CHARACTERISTICS (continued)

TPS79328
RIPPLE REJECTION
vs
FREQUENCY

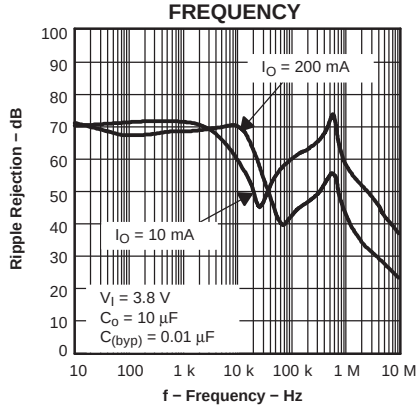

Figure 10.

TPS79328
RIPPLE REJECTION
vs
FREQUENCY

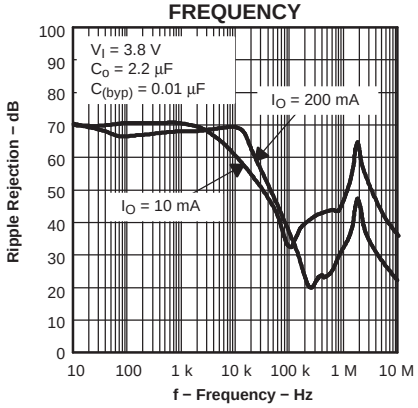

Figure 11.

TPS79328
RIPPLE REJECTION
vs
FREQUENCY

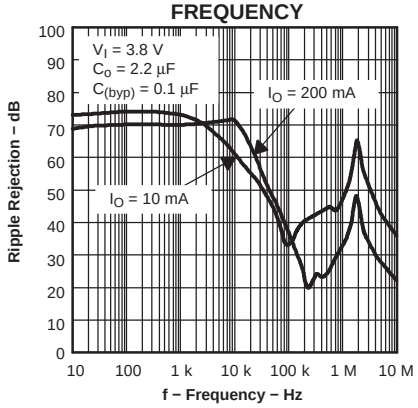

Figure 12.

TPS79328
OUTPUT VOLTAGE, ENABLE VOLTAGE
vs
TIME (START-UP)

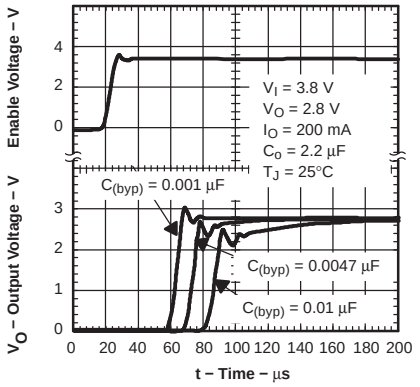

Figure 13.

TPS79328
LINE TRANSIENT RESPONSE

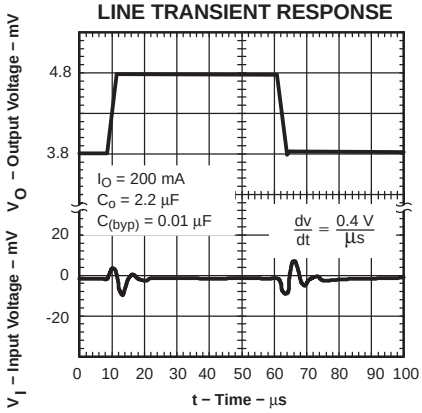

Figure 14.

TPS79328
LOAD TRANSIENT RESPONSE

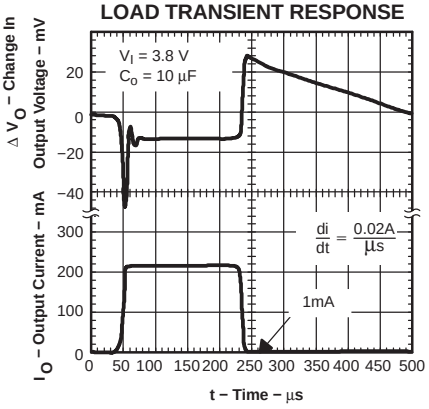

Figure 15.

POWER UP / POWER DOWN

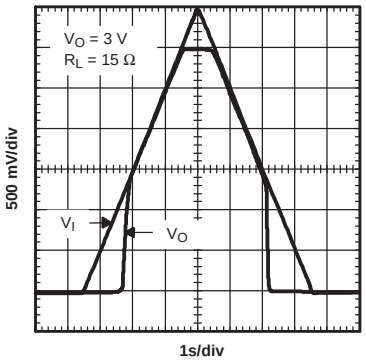

Figure 16.

DC DROPOUT VOLTAGE
vs
OUTPUT CURRENT

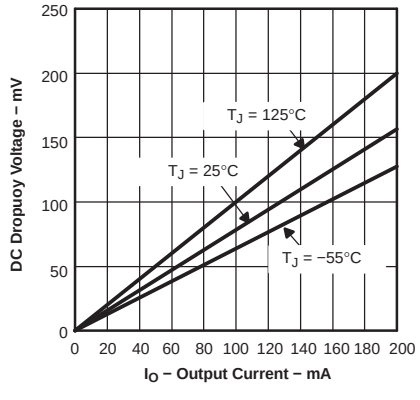

Figure 17.

TPS79301
DROPOUT VOLTAGE
vs
INPUT VOLTAGE

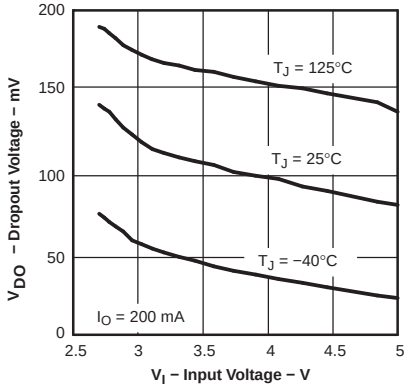

Figure 18.

TYPICAL CHARACTERISTICS (continued)

MINIMUM REQUIRED INPUT VOLTAGE vs OUTPUT VOLTAGE

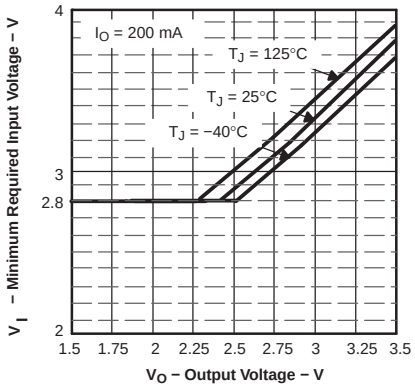

Figure 19.

TYPICAL REGIONS OF STABILITY EQUIVALENT SERIES RESISTANCE (ESR) vs OUTPUT CURRENT

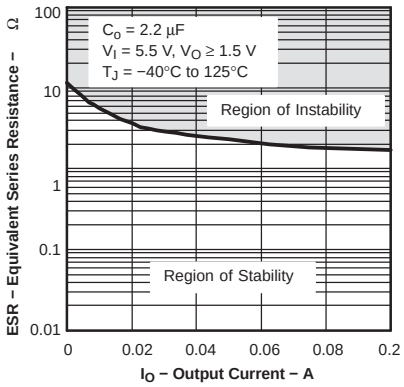

Figure 20.

TYPICAL REGIONS OF STABILITY EQUIVALENT SERIES RESISTANCE (ESR) vs OUTPUT CURRENT

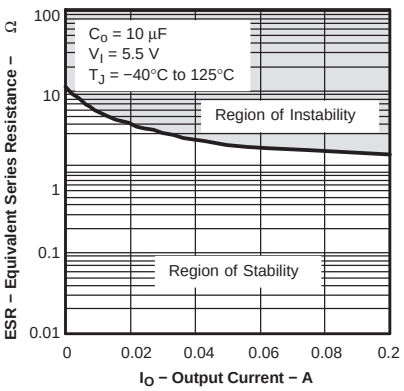

Figure 21.

APPLICATION INFORMATION

The TPS793xx family of low-dropout (LDO) regulators has been optimized for use in noise-sensitive battery-operated equipment. The device features extremely low dropout voltages, high PSRR, ultralow output noise, low quiescent current (170 μA typically), and enable-input to reduce supply currents to less than 1 μA when the regulator is turned off.

A typical application circuit is shown in Figure 22.

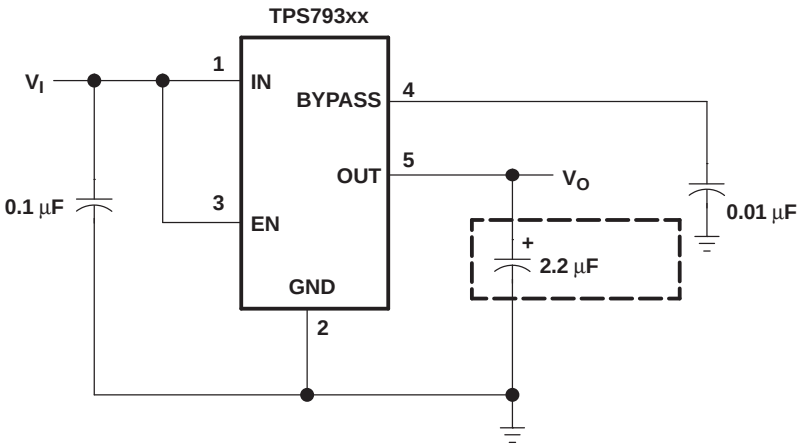

Figure 22. Typical Application Circuit

External Capacitor Requirements

A 0.1-μF or larger ceramic input bypass capacitor, connected between IN and GND and located close to the TPS793xx, is required for stability and improves transient response, noise rejection, and ripple rejection. A higher-value electrolytic input capacitor may be necessary if large, fast-rise-time load transients are anticipated and the device is located several inches from the power source.

Like all LDOs, the TPS793xx requires an output capacitor connected between OUT and GND to stabilize the internal control loop. The minimum recommended capacitance is 2.2-μF. Any 2.2-μF or larger ceramic capacitor is suitable, provided the capacitance does not vary significantly over temperature.

The internal voltage reference is a key source of noise in an LDO regulator. The TPS793xx has a BYPASS pin that is connected to the voltage reference through a 250-kΩ internal resistor. The 250-kΩ internal resistor, in conjunction with an external bypass capacitor connected to the BYPASS pin, creates a low pass filter to reduce the voltage reference noise and, therefore, the noise at the regulator output. In order for the regulator to operate properly, the current flow out of the BYPASS pin must be at a minimum, because any leakage current creates an IR drop across the internal resistor, thus, creating an output error. Therefore, the bypass capacitor must have minimal leakage current.

For example, the TPS79328 exhibits only 32 μV_{RMS} of output voltage noise using a 0.1-μF ceramic bypass capacitor and a 2.2-μF ceramic output capacitor. Note that the output starts up slower as the bypass capacitance increases due to the RC time constant at the BYPASS pin that is created by the internal 250-kΩ resistor and external capacitor.

Board Layout Recommendation to Improve PSRR and Noise Performance

To improve ac measurements like PSRR, output noise, and transient response, it is recommended that the board be designed with separate ground planes for V_{IN} and V_{OUT}, with each ground plane connected only at the GND pin of the device. In addition, the ground connection for the bypass capacitor should connect directly to the GND pin of the device.

APPLICATION INFORMATION (continued)

Power Dissipation and Junction Temperature

Specified regulator operation is ensured to a junction temperature of 125°C; the maximum junction temperature should be restricted to 125°C under normal operating conditions. This restriction limits the power dissipation the regulator can handle in any given application. To ensure the junction temperature is within acceptable limits, calculate the maximum allowable dissipation, $P_{D(max)}$, and the actual dissipation, P_D, which must be less than or equal to $P_{D(max)}$.

The maximum power dissipation limit is determined using the following equation:

$$P_{D(max)} = \frac{T_J max - T_A}{R_{\theta JA}} \quad (1)$$

Where:

$T_J max$ = Maximum allowable junction temperature

$R\theta_{JA}$ = Thermal resistance, junction to ambient, for the package, see the dissipation rating table

T_A = Ambient temperature

The regulator dissipation is calculated using:

$$P_D = \left(V_I - V_O\right) \times I_O \quad (2)$$

Power dissipation resulting from quiescent current is negligible. Excessive power dissipation triggers the thermal protection circuit.

Programming the TPS79301 Adjustable LDO Regulator

The output voltage of the TPS79301 adjustable regulator is programmed using an external resistor divider as shown in Figure 23. The output voltage is calculated using:

$$V_O = V_{ref} \times \left(1 + \frac{R1}{R2}\right) \quad (3)$$

Where:

V_{ref} = 1.2246 V typical (the internal reference voltage)

APPLICATION INFORMATION (continued)

Programming the TPS79301 Adjustable LDO Regulator (continued)

Resistors R1 and R2 should be chosen for approximately 50-μA divider current. Lower-value resistors can be used for improved noise performance, but the solution consumes more power. Higher resistor values should be avoided as leakage current into/out of FB across R1/R2 creates an offset voltage that artificially increases/decreases the feedback voltage and, thus, erroneously decreases/increases V_O. The recommended design procedure is to choose R2 = 30.1 kΩ to set the divider current at 50 μA, C1 = 15 pF for stability, and then calculate R1 using:

$$R1 = \left(\frac{V_O}{V_{ref}} - 1 \right) \times R2 \quad (4)$$

In order to improve the stability of the adjustable version, it is suggested that a small compensation capacitor be placed between OUT and FB. For voltages <1.8 V, the value of this capacitor should be 100 pF. For voltages >1.8 V, the approximate value of this capacitor can be calculated as:

$$C1 = \frac{(3 \times 10^{-7}) \times (R1 + R2)}{(R1 \times R2)} \quad (5)$$

The suggested value of this capacitor for several resistor ratios is shown in the table below. If this capacitor is not used (such as in a unity-gain configuration) or if an output voltage <1.8 V is chosen, then the minimum recommended output capacitor is 4.7 μF instead of 2.2 μF.

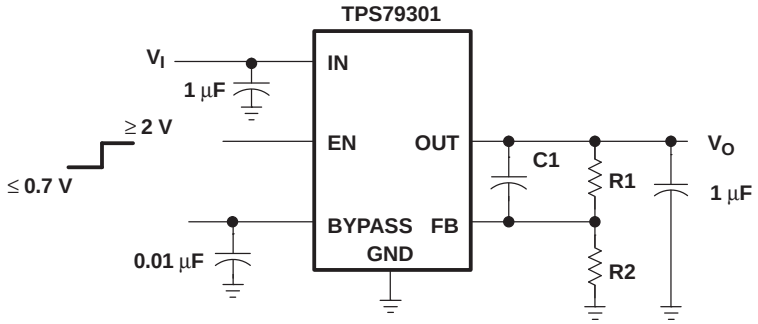

OUTPUT VOLTAGE PROGRAMMING GUIDE

OUTPUT VOLTAGE	R1	R2	C1
2.5 V	31.6 kΩ	30.1 kΩ	22 pF
3.3 V	51 kΩ	30.1 kΩ	15 pF
3.6 V	59 kΩ	30.1 kΩ	15 pF

Figure 23. TPS79301 Adjustable LDO Regulator Programming

Regulator Protection

The TPS793xx features internal current limiting and thermal protection. During normal operation, the TPS793xx limits output current to approximately 400 mA. When current limiting engages, the output voltage scales back linearly until the overcurrent condition ends. While current limiting is designed to prevent gross device failure, care should be taken not to exceed the power dissipation ratings of the package or the absolute maximum voltage ratings of the device. If the temperature of the device exceeds approximately 165°C, thermal-protection circuitry shuts it down. Once the device has cooled down to below approximately 140°C, regulator operation resumes.

PACKAGING INFORMATION

Orderable Device	Status (1)	Package Type	Package Drawing	Pins	Package Qty	Eco Plan (2)	Lead/Ball Finish (6)	MSL Peak Temp (3)	Op Temp (°C)	Device Marking (4/5)	Samples
TPS79301DBVREP	ACTIVE	SOT-23	DBV	6	3000	Green (RoHS & no Sb/Br)	CU NIPDAU	Level-1-260C-UNLIM	-40 to 125	PGVE	Samples
TPS79301MDBVREP	ACTIVE	SOT-23	DBV	6	3000	Green (RoHS & no Sb/Br)	CU NIPDAU	Level-1-260C-UNLIM	-40 to 125	PMBM	Samples
TPS79318DBVREP	ACTIVE	SOT-23	DBV	5	3000	Green (RoHS & no Sb/Br)	CU NIPDAU	Level-1-260C-UNLIM	-40 to 125	PHHE	Samples
TPS79333DBVREP	ACTIVE	SOT-23	DBV	5	3000	Green (RoHS & no Sb/Br)	CU NIPDAU	Level-1-260C-UNLIM	-40 to 125	PHUE	Samples
TPS793475DBVREP	ACTIVE	SOT-23	DBV	5	3000	Green (RoHS & no Sb/Br)	CU NIPDAU	Level-1-260C-UNLIM	-40 to 125	PHJE	Samples
V62/03634-01YE	ACTIVE	SOT-23	DBV	6	3000	Green (RoHS & no Sb/Br)	CU NIPDAU	Level-1-260C-UNLIM	-40 to 125	PGVE	Samples
V62/03634-02XE	ACTIVE	SOT-23	DBV	5	3000	Green (RoHS & no Sb/Br)	CU NIPDAU	Level-1-260C-UNLIM	-40 to 125	PHHE	Samples
V62/03634-07XE	ACTIVE	SOT-23	DBV	5	3000	Green (RoHS & no Sb/Br)	CU NIPDAU	Level-1-260C-UNLIM	-40 to 125	PHUE	Samples
V62/03634-08XE	ACTIVE	SOT-23	DBV	5	3000	Green (RoHS & no Sb/Br)	CU NIPDAU	Level-1-260C-UNLIM	-40 to 125	PHJE	Samples
V62/03634-09XE	ACTIVE	SOT-23	DBV	6	3000	Green (RoHS & no Sb/Br)	CU NIPDAU	Level-1-260C-UNLIM	-40 to 125	PMBM	Samples

(1) The marketing status values are defined as follows:
ACTIVE: Product device recommended for new designs.
LIFEBUY: TI has announced that the device will be discontinued, and a lifetime-buy period is in effect.
NRND: Not recommended for new designs. Device is in production to support existing customers, but TI does not recommend using this part in a new design.
PREVIEW: Device has been announced but is not in production. Samples may or may not be available.
OBSOLETE: TI has discontinued the production of the device.

(2) Eco Plan - The planned eco-friendly classification: Pb-Free (RoHS), Pb-Free (RoHS Exempt), or Green (RoHS & no Sb/Br) - please check http://www.ti.com/productcontent for the latest availability information and additional product content details.
TBD: The Pb-Free/Green conversion plan has not been defined.
Pb-Free (RoHS): TI's terms "Lead-Free" or "Pb-Free" mean semiconductor products that are compatible with the current RoHS requirements for all 6 substances, including the requirement that lead not exceed 0.1% by weight in homogeneous materials. Where designed to be soldered at high temperatures, TI Pb-Free products are suitable for use in specified lead-free processes.
Pb-Free (RoHS Exempt): This component has a RoHS exemption for either 1) lead-based flip-chip solder bumps used between the die and package, or 2) lead-based die adhesive used between the die and leadframe. The component is otherwise considered Pb-Free (RoHS compatible) as defined above.
Green (RoHS & no Sb/Br): TI defines "Green" to mean Pb-Free (RoHS compatible), and free of Bromine (Br) and Antimony (Sb) based flame retardants (Br or Sb do not exceed 0.1% by weight in homogeneous material)

(3) MSL, Peak Temp. - The Moisture Sensitivity Level rating according to the JEDEC industry standard classifications, and peak solder temperature.

(4) There may be additional marking, which relates to the logo, the lot trace code information, or the environmental category on the device.

(5) Multiple Device Markings will be inside parentheses. Only one Device Marking contained in parentheses and separated by a "~" will appear on a device. If a line is indented then it is a continuation of the previous line and the two combined represent the entire Device Marking for that device.

(6) Lead/Ball Finish - Orderable Devices may have multiple material finish options. Finish options are separated by a vertical ruled line. Lead/Ball Finish values may wrap to two lines if the finish value exceeds the maximum column width.

Important Information and Disclaimer: The information provided on this page represents TI's knowledge and belief as of the date that it is provided. TI bases its knowledge and belief on information provided by third parties, and makes no representation or warranty as to the accuracy of such information. Efforts are underway to better integrate information from third parties. TI has taken and continues to take reasonable steps to provide representative and accurate information but may not have conducted destructive testing or chemical analysis on incoming materials and chemicals. TI and TI suppliers consider certain information to be proprietary, and thus CAS numbers and other limited information may not be available for release.

In no event shall TI's liability arising out of such information exceed the total purchase price of the TI part(s) at issue in this document sold by TI to Customer on an annual basis.

OTHER QUALIFIED VERSIONS OF TPS79333-EP :

- Catalog: TPS79333

NOTE: Qualified Version Definitions:

- Catalog - TI's standard catalog product

TAPE AND REEL INFORMATION

REEL DIMENSIONS

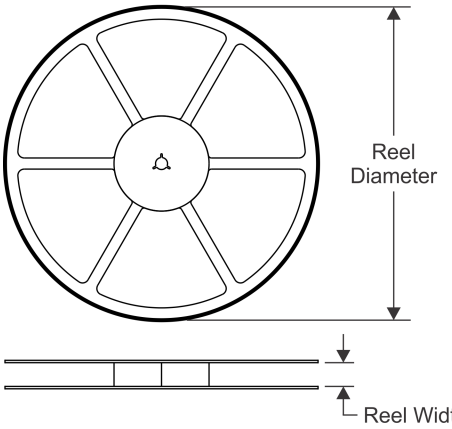

TAPE DIMENSIONS

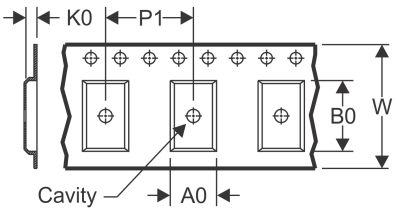

A0	Dimension designed to accommodate the component width
B0	Dimension designed to accommodate the component length
K0	Dimension designed to accommodate the component thickness
W	Overall width of the carrier tape
P1	Pitch between successive cavity centers

QUADRANT ASSIGNMENTS FOR PIN 1 ORIENTATION IN TAPE

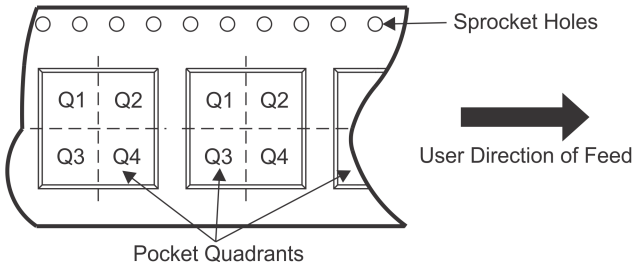

*All dimensions are nominal

Device	Package Type	Package Drawing	Pins	SPQ	Reel Diameter (mm)	Reel Width W1 (mm)	A0 (mm)	B0 (mm)	K0 (mm)	P1 (mm)	W (mm)	Pin1 Quadrant
TPS79301DBVREP	SOT-23	DBV	6	3000	180.0	9.0	3.15	3.2	1.4	4.0	8.0	Q3
TPS79301MDBVREP	SOT-23	DBV	6	3000	179.0	8.4	3.2	3.2	1.4	4.0	8.0	Q3
TPS79333DBVREP	SOT-23	DBV	5	3000	180.0	9.0	3.15	3.2	1.4	4.0	8.0	Q3
TPS793475DBVREP	SOT-23	DBV	5	3000	180.0	9.0	3.15	3.2	1.4	4.0	8.0	Q3

TAPE AND REEL BOX DIMENSIONS

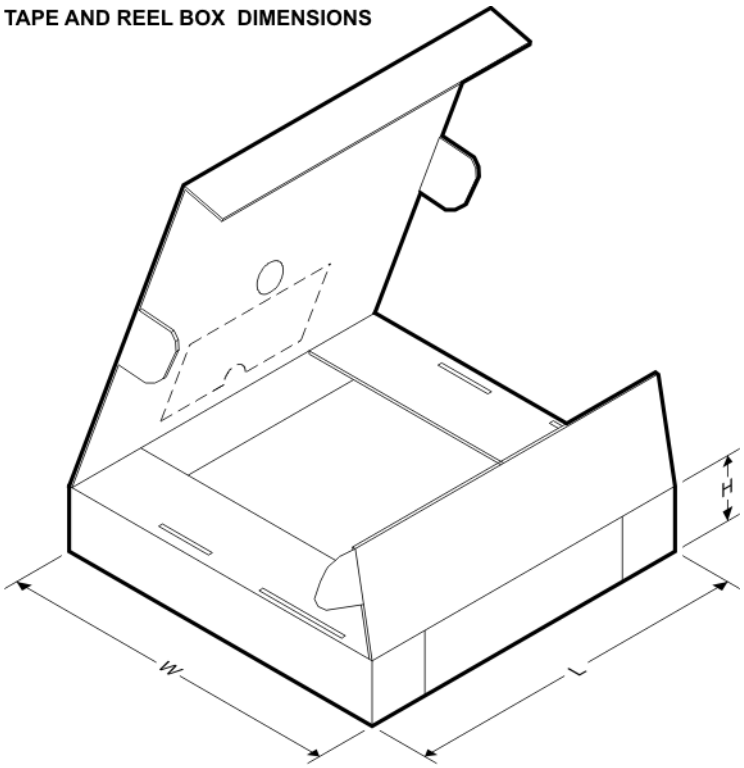

*All dimensions are nominal

Device	Package Type	Package Drawing	Pins	SPQ	Length (mm)	Width (mm)	Height (mm)
TPS79301DBVREP	SOT-23	DBV	6	3000	182.0	182.0	20.0
TPS79301MDBVREP	SOT-23	DBV	6	3000	203.0	203.0	35.0
TPS79333DBVREP	SOT-23	DBV	5	3000	182.0	182.0	20.0
TPS793475DBVREP	SOT-23	DBV	5	3000	182.0	182.0	20.0

DBV (R–PDSO–G5) PLASTIC SMALL–OUTLINE PACKAGE

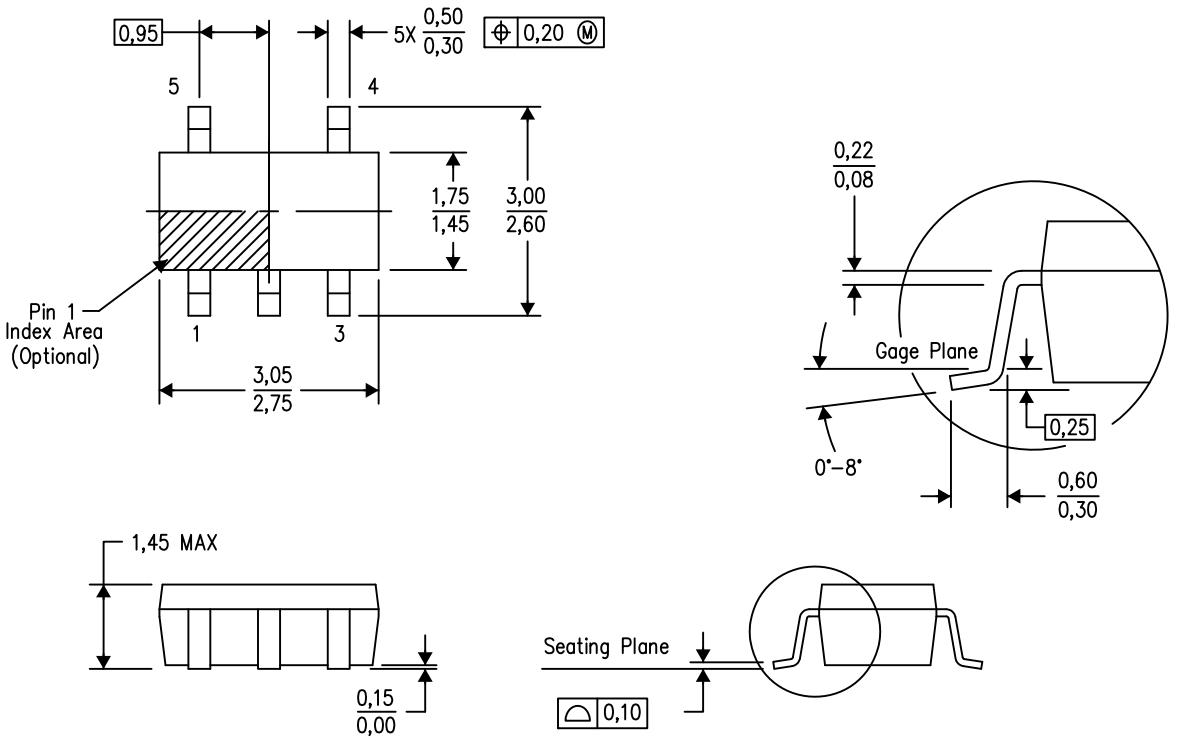

4073253–4/N 12/14

NOTES:
A. All linear dimensions are in millimeters.
B. This drawing is subject to change without notice.
C. Body dimensions do not include mold flash or protrusion. Mold flash and protrusion shall not exceed 0.15 per side.
D. Falls within JEDEC MO–178 Variation AA.

DBV (R–PDSO–G5) PLASTIC SMALL OUTLINE

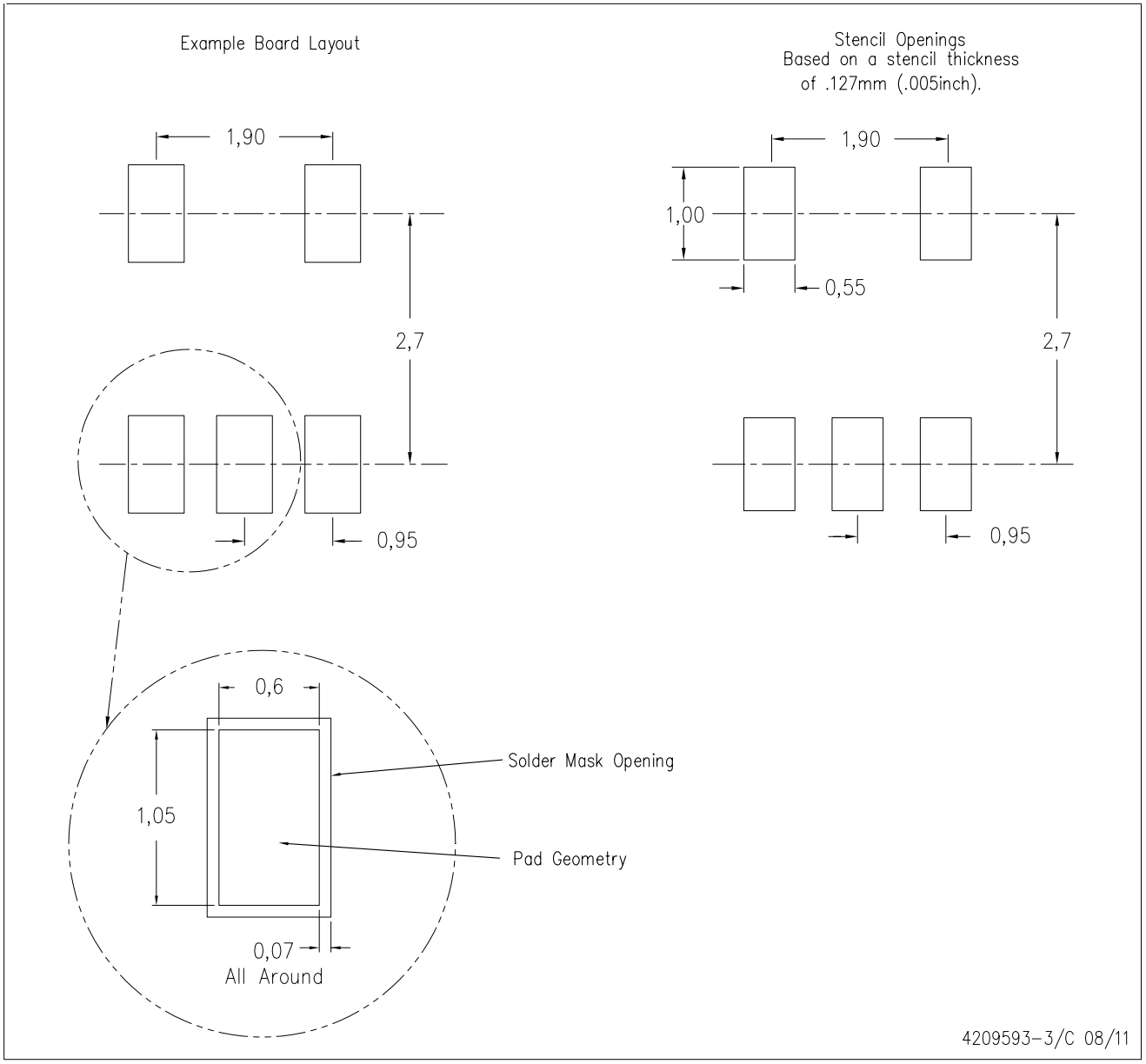

NOTES:
A. All linear dimensions are in millimeters.
B. This drawing is subject to change without notice.
C. Customers should place a note on the circuit board fabrication drawing not to alter the center solder mask defined pad.
D. Publication IPC–7351 is recommended for alternate designs.
E. Laser cutting apertures with trapezoidal walls and also rounding corners will offer better paste release. Customers should contact their board assembly site for stencil design recommendations. Example stencil design based on a 50% volumetric metal load solder paste. Refer to IPC–7525 for other stencil recommendations.

DBV (R–PDSO–G6) PLASTIC SMALL–OUTLINE PACKAGE

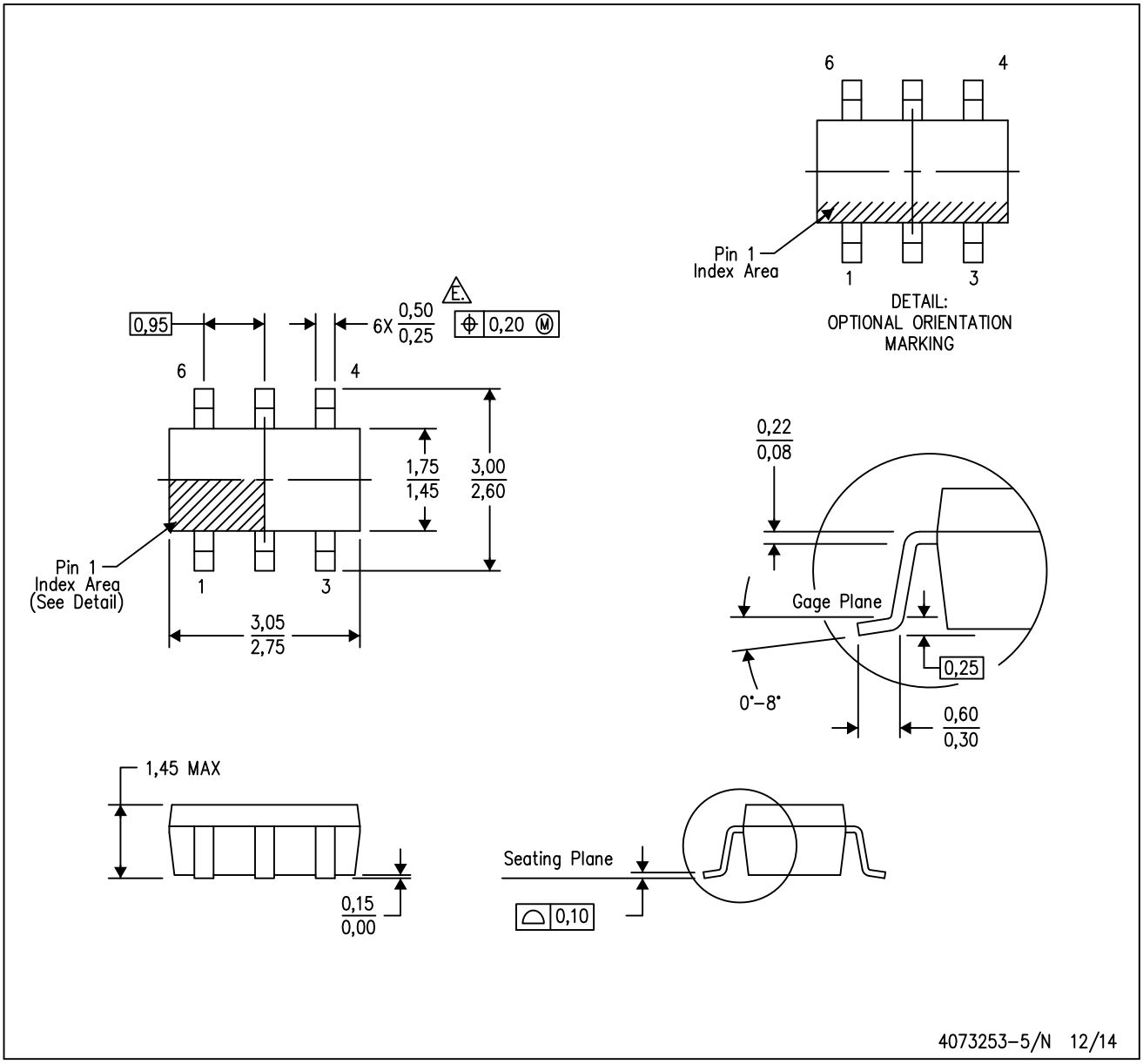

NOTES:
A. All linear dimensions are in millimeters.
B. This drawing is subject to change without notice.
C. Body dimensions do not include mold flash or protrusion. Mold flash and protrusion shall not exceed 0.15 per side.
D. Leads 1,2,3 may be wider than leads 4,5,6 for package orientation.
E. Falls within JEDEC MO–178 Variation AB, except minimum lead width.

DBV (R–PDSO–G6) PLASTIC SMALL OUTLINE

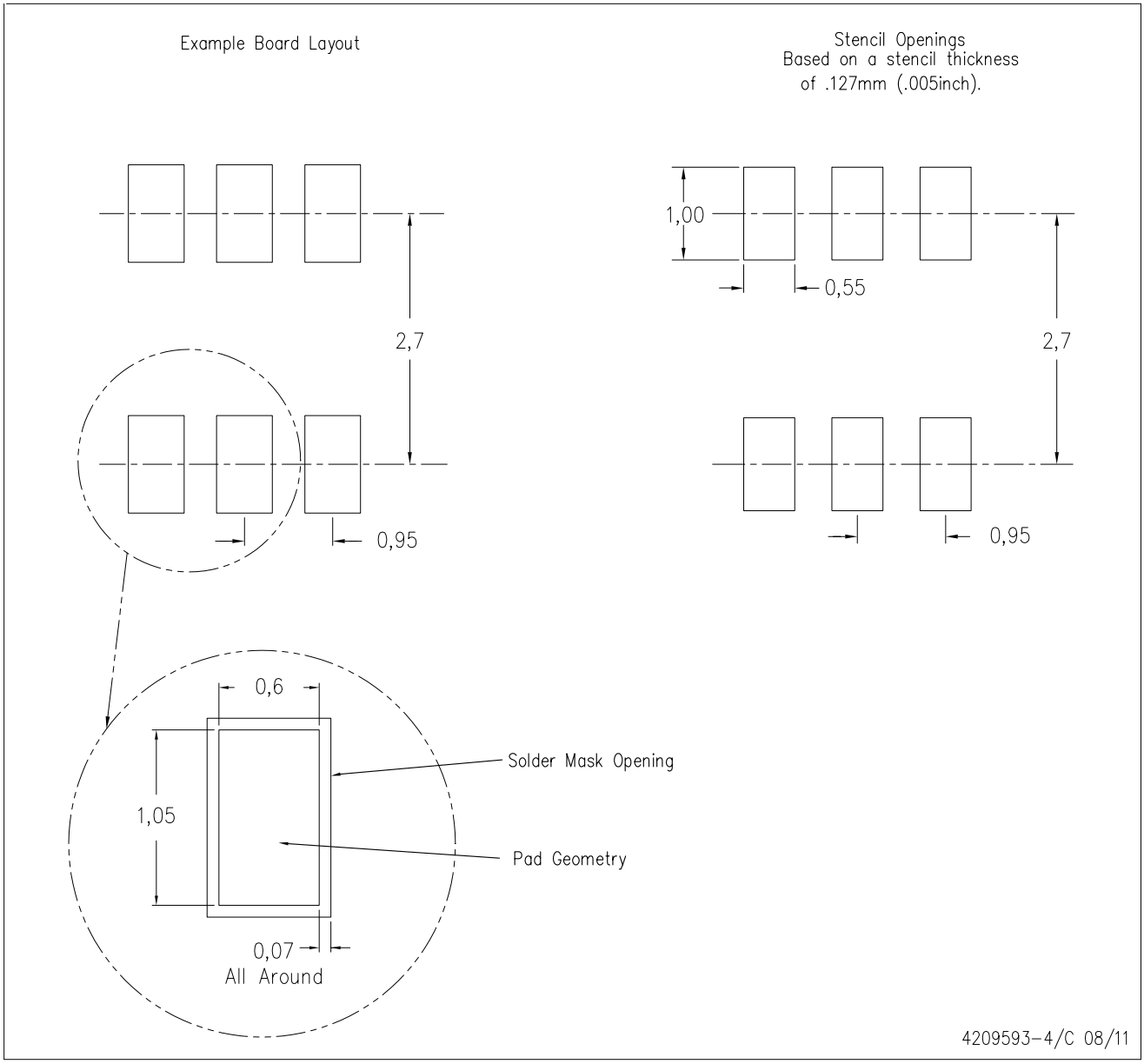

NOTES:
A. All linear dimensions are in millimeters.
B. This drawing is subject to change without notice.
C. Customers should place a note on the circuit board fabrication drawing not to alter the center solder mask defined pad.
D. Publication IPC–7351 is recommended for alternate designs.
E. Laser cutting apertures with trapezoidal walls and also rounding corners will offer better paste release. Customers should contact their board assembly site for stencil design recommendations. Example stencil design based on a 50% volumetric metal load solder paste. Refer to IPC–7525 for other stencil recommendations.

IMPORTANT NOTICE

Texas Instruments Incorporated and its subsidiaries (TI) reserve the right to make corrections, enhancements, improvements and other changes to its semiconductor products and services per JESD46, latest issue, and to discontinue any product or service per JESD48, latest issue. Buyers should obtain the latest relevant information before placing orders and should verify that such information is current and complete. All semiconductor products (also referred to herein as “components”) are sold subject to TI’s terms and conditions of sale supplied at the time of order acknowledgment.

TI warrants performance of its components to the specifications applicable at the time of sale, in accordance with the warranty in TI’s terms and conditions of sale of semiconductor products. Testing and other quality control techniques are used to the extent TI deems necessary to support this warranty. Except where mandated by applicable law, testing of all parameters of each component is not necessarily performed.

TI assumes no liability for applications assistance or the design of Buyers’ products. Buyers are responsible for their products and applications using TI components. To minimize the risks associated with Buyers’ products and applications, Buyers should provide adequate design and operating safeguards.

TI does not warrant or represent that any license, either express or implied, is granted under any patent right, copyright, mask work right, or other intellectual property right relating to any combination, machine, or process in which TI components or services are used. Information published by TI regarding third-party products or services does not constitute a license to use such products or services or a warranty or endorsement thereof. Use of such information may require a license from a third party under the patents or other intellectual property of the third party, or a license from TI under the patents or other intellectual property of TI.

Reproduction of significant portions of TI information in TI data books or data sheets is permissible only if reproduction is without alteration and is accompanied by all associated warranties, conditions, limitations, and notices. TI is not responsible or liable for such altered documentation. Information of third parties may be subject to additional restrictions.

Resale of TI components or services with statements different from or beyond the parameters stated by TI for that component or service voids all express and any implied warranties for the associated TI component or service and is an unfair and deceptive business practice. TI is not responsible or liable for any such statements.

Buyer acknowledges and agrees that it is solely responsible for compliance with all legal, regulatory and safety-related requirements concerning its products, and any use of TI components in its applications, notwithstanding any applications-related information or support that may be provided by TI. Buyer represents and agrees that it has all the necessary expertise to create and implement safeguards which anticipate dangerous consequences of failures, monitor failures and their consequences, lessen the likelihood of failures that might cause harm and take appropriate remedial actions. Buyer will fully indemnify TI and its representatives against any damages arising out of the use of any TI components in safety-critical applications.

In some cases, TI components may be promoted specifically to facilitate safety-related applications. With such components, TI’s goal is to help enable customers to design and create their own end-product solutions that meet applicable functional safety standards and requirements. Nonetheless, such components are subject to these terms.

No TI components are authorized for use in FDA Class III (or similar life-critical medical equipment) unless authorized officers of the parties have executed a special agreement specifically governing such use.

Only those TI components which TI has specifically designated as military grade or “enhanced plastic” are designed and intended for use in military/aerospace applications or environments. Buyer acknowledges and agrees that any military or aerospace use of TI components which have ***not*** been so designated is solely at the Buyer's risk, and that Buyer is solely responsible for compliance with all legal and regulatory requirements in connection with such use.

TI has specifically designated certain components as meeting ISO/TS16949 requirements, mainly for automotive use. In any case of use of non-designated products, TI will not be responsible for any failure to meet ISO/TS16949.

Products		**Applications**	
Audio	www.ti.com/audio	Automotive and Transportation	www.ti.com/automotive
Amplifiers	amplifier.ti.com	Communications and Telecom	www.ti.com/communications
Data Converters	dataconverter.ti.com	Computers and Peripherals	www.ti.com/computers
DLP® Products	www.dlp.com	Consumer Electronics	www.ti.com/consumer-apps
DSP	dsp.ti.com	Energy and Lighting	www.ti.com/energy
Clocks and Timers	www.ti.com/clocks	Industrial	www.ti.com/industrial
Interface	interface.ti.com	Medical	www.ti.com/medical
Logic	logic.ti.com	Security	www.ti.com/security
Power Mgmt	power.ti.com	Space, Avionics and Defense	www.ti.com/space-avionics-defense
Microcontrollers	microcontroller.ti.com	Video and Imaging	www.ti.com/video
RFID	www.ti-rfid.com		
OMAP Applications Processors	www.ti.com/omap	**TI E2E Community**	e2e.ti.com
Wireless Connectivity	www.ti.com/wirelessconnectivity		

Mailing Address: Texas Instruments, Post Office Box 655303, Dallas, Texas 75265
Copyright © 2016, Texas Instruments Incorporated