250mA, Low Quiescent Current, Ultra-Low Noise, High PSRR Low-Dropout Linear Regulator

FEATURES

- **250mA Low Dropout Regulator with EN**
- **Low I_Q: 44μA**
- **Multiple Output Voltage Versions Available:**
  - **Fixed Outputs of 1.0V to 4.3V Using Innovative Factory EEPROM Programming**
  - **Adjustable Outputs from 1.25V to 6.2V**
- **High PSRR: 60dB at 1kHz**
- **Ultra-low Noise: 28μV_{RMS}**
- **Fast Start-Up Time: 45μs**
- **Stable with a Low-ESR, 2.0μF Typical Output Capacitance**
- **Excellent Load/Line Transient Response**
- **2% Overall Accuracy (Load/Line/Temp)**
- **Very Low Dropout: 125mV at 250mA**
- **ThinSOT-23, 2mm × 2mm SON-6, and 3mm x 3mm SON-8 Packages**

APPLICATIONS

- **WiFi, WiMax**
- **Printers**
- **Cellular Phones, SmartPhones**
- **Handheld Organizers, PDAs**

DESCRIPTION

The TPS734xx family of low-dropout (LDO), low-power linear regulators offers excellent ac performance with very low ground current. High power-supply rejection ratio (PSRR), low noise, fast start-up, and excellent line and load transient response are provided while consuming a very low 44μA (typical) ground current. The TPS734xx is stable with ceramic capacitors and uses an advanced BiCMOS fabrication process to yield a typical dropout voltage of 125mV at 250mA output. The TPS734xx uses a precision voltage reference and feedback loop to achieve overall accuracy of 2% over all load, line, process, and temperature variations. It is fully specified from T_J = –40°C to +125°C and is offered in low-profile ThinSOT-23, 2mm × 2mm SON, and 3mm x 3mm SON packages that are ideal for wireless handsets, printers, and WLAN cards.

TPS734xxDDC
TSOT23-5
(TOP VIEW)

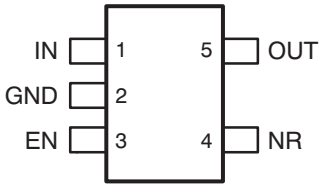

TPS73401DDC
TSOT23-5
(TOP VIEW)

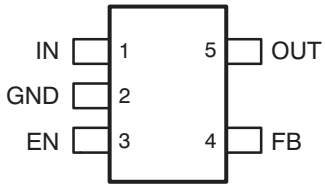

TPS734xxDRV
2mm x 2mm SON-6
(TOP VIEW)

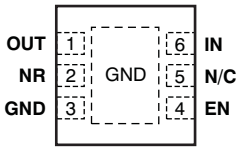

TPS73401DRV
2mm x 2mm SON-6
(TOP VIEW)

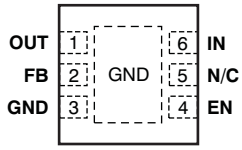

Please be aware that an important notice concerning availability, standard warranty, and use in critical applications of Texas Instruments semiconductor products and disclaimers thereto appears at the end of this data sheet.

All trademarks are the property of their respective owners.

PRODUCTION DATA information is current as of publication date. Products conform to specifications per the terms of the Texas Instruments standard warranty. Production processing does not necessarily include testing of all parameters.

Copyright © 2007–2009, Texas Instruments Incorporated

This integrated circuit can be damaged by ESD. Texas Instruments recommends that all integrated circuits be handled with appropriate precautions. Failure to observe proper handling and installation procedures can cause damage.

ESD damage can range from subtle performance degradation to complete device failure. Precision integrated circuits may be more susceptible to damage because very small parametric changes could cause the device not to meet its published specifications.

ORDERING INFORMATION(1)

PRODUCT	V_{OUT}(2)
TPS734**xxyyyz**	**XX** is nominal output voltage (for example, 28 = 2.8V, 285 = 2.85V, 01 = Adjustable). **YYY** is package designator. **Z** is package quantity.

(1) For the most current package and ordering information see the Package Option Addendum at the end of this document, or see the TI website at www.ti.com.
(2) Output voltages from 1.0V to 3.6V in 50mV increments are available through the use of innovative factory EEPROM programming; minimum order quantities may apply. Contact factory for details and availability.

ABSOLUTE MAXIMUM RATINGS(1)

Over operating temperature range (unless otherwise noted).

PARAMETER	TPS734xx	UNIT
V_{IN} range	–0.3 to +7.0	V
V_{EN} range	–0.3 to V_{IN} +0.3	V
V_{OUT} range	–0.3 to V_{IN} +0.3	V
V_{FB} range	–0.3 to V_{FB} (TYP) +0.3	V
Peak output current	Internally limited	
Continuous total power dissipation	See Dissipation Ratings Table	
Junction temperature range, T_J	–55 to +150	°C
Storage junction temperature range, T_{STG}	–55 to +150	°C
ESD rating, HBM	2	kV
ESD rating, CDM	500	V

(1) Stresses above these ratings may cause permanent damage. Exposure to absolute maximum conditions for extended periods may degrade device reliability. These are stress ratings only, and functional operation of the device at these or any other conditions beyond those specified is not implied.

DISSIPATION RATINGS

BOARD	PACKAGE	$R_{\theta JC}$	$R_{\theta JA}$	DERATING FACTOR ABOVE T_A = +25°C	T_A < +25°C	T_A = +70°C	T_A = +85°C
Low-K(1)	DDC	90°C/W	280°C/W	3.6mW/°C	360mW	200mW	145mW
High-K(2)	DDC	90°C/W	200°C/W	5.0mW/°C	500mW	275mW	200mW
Low-K(1)	DRV	20°C/W	140°C/W	7.1mW/°C	715mW	395mW	285mW
High-K(2)	DRV	20°C/W	65°C/W	15.4mW/°C	1.54W	845mW	615mW

(1) The JEDEC low-K (1s) board used to derive this data was a 3in × 3in (7,62cm × 7,62cm), two-layer board with 2-ounce (56,699g) copper traces on top of the board.
(2) The JEDEC high-K (2s2p) board used to derive this data was a 3in × 3in (7,62cm × 7,62cm), multilayer board with 1-ounce (28,35g) internal power and ground planes and 2-ounce (56,699g) copper traces on top and bottom of the board

Copyright © 2007–2009, Texas Instruments Incorporated

ELECTRICAL CHARACTERISTICS

Over operating temperature range (T_J = –40°C to +125°C), V_{IN} = $V_{OUT(TYP)}$ + 0.3V or 2.7V, whichever is greater; I_{OUT} = 1mA, V_{EN} = V_{IN}, C_{OUT} = 2.2µF, C_{NR} = 0.01µF, unless otherwise noted. For TPS73401, V_{OUT} = 3.0V.
Typical values are at T_J = +25°C.

PARAMETER			TEST CONDITIONS	MIN	TYP	MAX	UNIT
V_{IN}	Input voltage range(1)			2.7		6.5	V
V_{FB}	Internal reference (TPS73401)			1.184	1.208	1.232	V
V_{OUT}	Output voltage range (TPS73401)			V_{FB}		6.3	V
V_{OUT}	Output accuracy	Nominal	T_J = +25°C	–1.0		+1.0	%
V_{OUT}	Output accuracy(1)	Over V_{IN}, I_{OUT}, Temp	V_{OUT} + 0.3V ≤ V_{IN} ≤ 6.5V 1mA ≤ I_{OUT} ≤ 250mA	–2.0	±1.0	+2.0	%
ΔV_{OUT}%/ ΔV_{IN}	Line regulation(1)		$V_{OUT(NOM)}$ + 0.3V ≤ V_{IN} ≤ 6.5V		0.02		%/V
ΔV_{OUT}%/ ΔI_{OUT}	Load regulation		500µA ≤ I_{OUT} ≤ 250mA		0.005		%/mA
V_{DO}	Dropout voltage(2) (V_{IN} = $V_{OUT(NOM)}$ – 0.1V)		I_{OUT} = 250mA		125	219	mV
I_{CL}	Output current limit		V_{OUT} = 0.9 × $V_{OUT(NOM)}$	300	580	900	mA
I_{GND}	Ground pin current		500µA ≤ I_{OUT} ≤ 250mA		45	65	µA
I_{SHDN}	Shutdown current (I_{GND})		V_{EN} ≤ 0.4V		0.15	1.0	µA
I_{FB}	Feedback pin current (TPS73401)			–0.5		0.5	µA
PSRR	Power-supply rejection ratio V_{IN} = 3.85V, V_{OUT} = 2.85V, C_{NR} = 0.01µF, I_{OUT} = 100mA		f = 100Hz		60		dB
			f = 1kHz		56		dB
			f = 10kHz		41		dB
			f = 100kHz		28		dB
V_N	Output noise voltage BW = 10Hz to 100kHz, V_{OUT} = 2.8V		C_{NR} = 0.01µF		11 x V_{OUT}		μV_{RMS}
			C_{NR} = none		95 x V_{OUT}		μV_{RMS}
T_{STR}	Startup time, V_{OUT} = 0 ~ 90%, V_{OUT} = 2.85V, R_L = 14Ω, C_{OUT} = 2.2µF		C_{NR} = none		45		µs
			C_{NR} = 0.001µF		45		µs
			C_{NR} = 0.01µF		50		µs
			C_{NR} = 0.047µF		50		µs
$V_{EN(HI)}$	Enable high (enabled)			1.2		V_{IN}	V
$V_{EN(LO)}$	Enable low (shutdown)			0		0.4	V
$I_{EN(HI)}$	Enable pin current, enabled		V_{EN} = V_{IN} = 6.5V		0.03	1.0	µA
T_{SD}	Thermal shutdown temperature		Shutdown, temperature increasing		165		°C
			Reset, temperature decreasing		145		°C
T_J	Operating junction temperature			–40		+125	°C
UVLO	Undervoltage lock-out		V_{IN} rising	1.90	2.20	2.65	V
	Hysteresis		V_{IN} falling		70		mV

(1) Minimum V_{IN} = V_{OUT} + V_{DO} or 2.7V, whichever is greater.
(2) V_{DO} is not measured for devices with $V_{OUT(NOM)}$ < 2.8V because minimum V_{IN} = 2.7V.

Copyright © 2007–2009, Texas Instruments Incorporated

DEVICE INFORMATION

FUNCTIONAL BLOCK DIAGRAMS

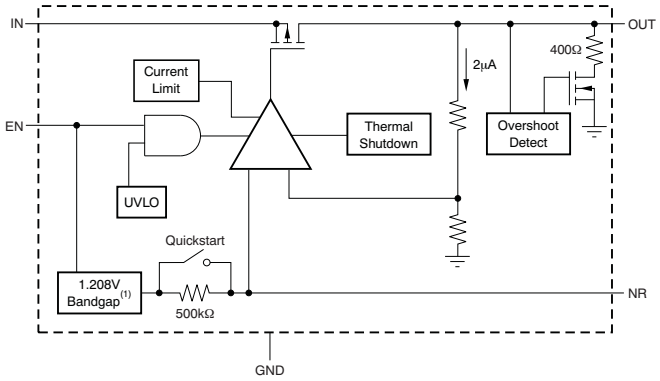

NOTE (1): Fixed voltage versions between 1.0V to 1.2V have a 1.0V bandgap circuit instead of a 1.208V bandgap circuit.

Figure 1. Fixed Voltage Versions

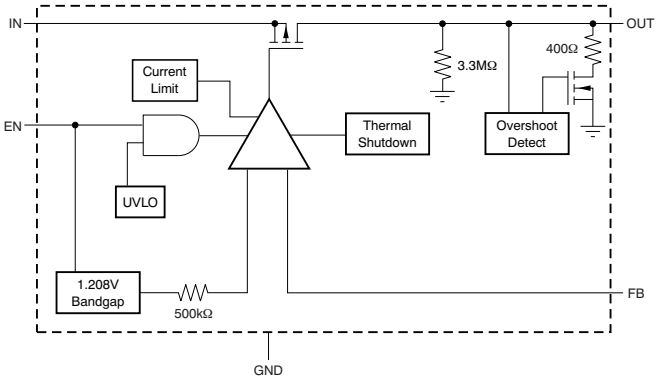

Figure 2. Adjustable Voltage Versions

PIN CONFIGURATIONS

TPS734xxDDC
TSOT23-5
(TOP VIEW)

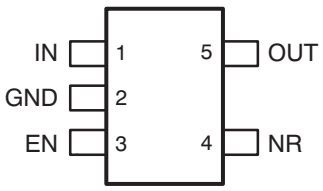

TPS73401DDC
TSOT23-5
(TOP VIEW)

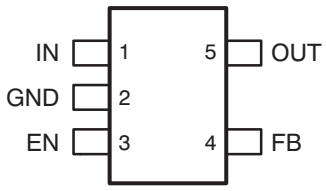

TPS734xxDRV
2mm x 2mm SON-6
(TOP VIEW)

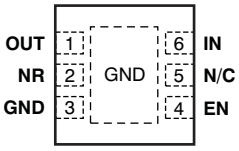

TPS73401DRV
2mm x 2mm SON-6
(TOP VIEW)

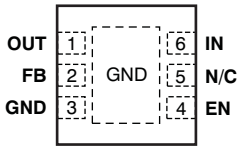

PIN DESCRIPTIONS

TPS734xx				
NAME	**DDC**	**DRV**	**DRB**	**DESCRIPTION**
IN	1	6	8	Input supply.
GND	2	3, Pad	4	Ground. The pad must be tied to GND.
EN	3	4	5	Driving the enable pin (EN) high turns on the regulator. Driving this pin low puts the regulator into shutdown mode. EN can be connected to IN if not used.
NR	4	2	3	Fixed voltage versions only; connecting an external capacitor to this pin bypasses noise generated by the internal bandgap. This allows output noise to be reduced to very low levels.
FB	4	2	3	Adjustable version only; this is the input to the control loop error amplifier, and is used to set the output voltage of the device.
OUT	5	1	1	Output of the regulator. A small capacitor (total typical capacitance ≥ 2.0µF ceramic) is needed from this pin to ground to assure stability.
N/C	—	5	2, 6, 7	Not internally connected. This pin must either be left open, or tied to GND.

Copyright © 2007–2009, Texas Instruments Incorporated

TYPICAL CHARACTERISTICS

Over operating temperature range (T_J = –40°C to +125°C); V_{IN} = $V_{OUT(TYP)}$ + 0.3V or 2.7V, whichever is greater; I_{OUT} = 1mA, V_{EN} = V_{IN},C_{OUT} = 2.2µF, C_{NR} = 0.01µF, unless otherwise noted. For TPS73401, V_{OUT} = 3.0V. Typical values are at T_J = +25°C.

TPS73401 LINE REGULATION

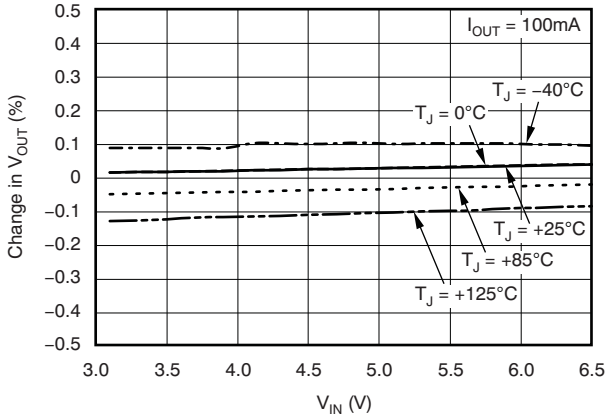

Figure 3.

TPS73425 LINE REGULATION

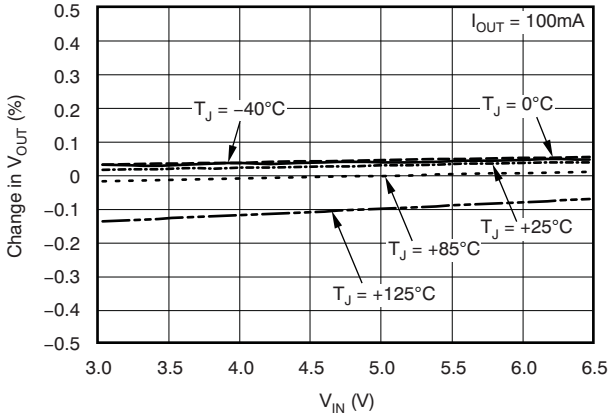

Figure 4.

TPS73401 LOAD REGULATION

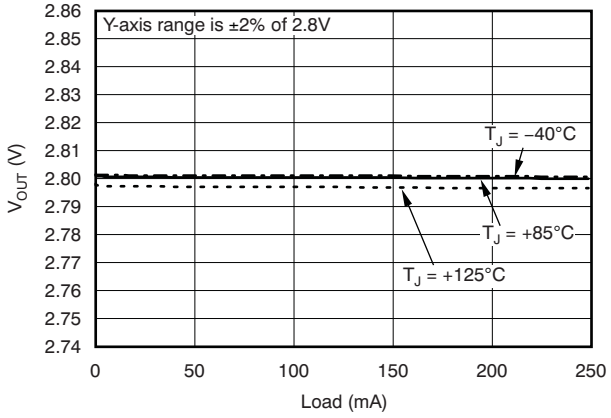

Figure 5.

TPS73425 LOAD REGULATION

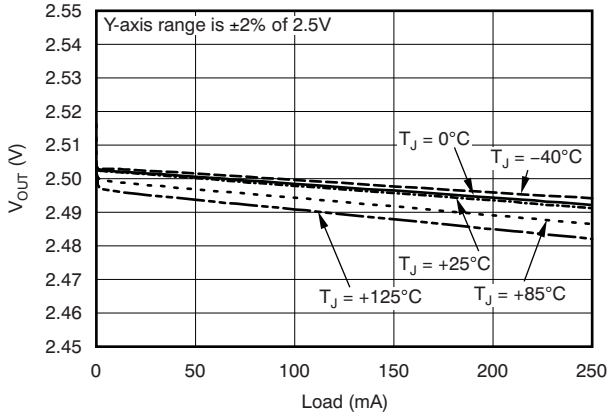

Figure 6.

TPS73425 GROUND PIN CURRENT vs OUTPUT CURRENT

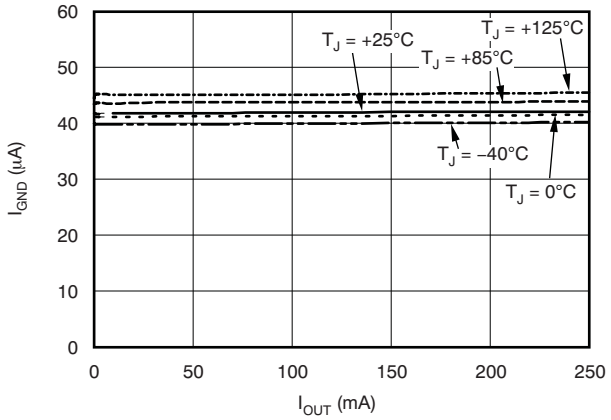

Figure 7.

TPS73425 GROUND PIN CURRENT (DISABLE) vs TEMPERATURE

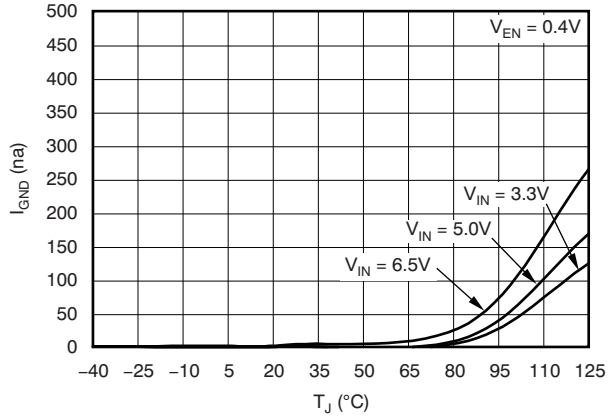

Figure 8.

Copyright © 2007–2009, Texas Instruments Incorporated

TYPICAL CHARACTERISTICS (continued)

Over operating temperature range (T_J = –40°C to +125°C); V_{IN} = $V_{OUT(TYP)}$ + 0.3V or 2.7V, whichever is greater; I_{OUT} = 1mA, V_{EN} = V_{IN}, C_{OUT} = 2.2µF, C_{NR} = 0.01µF, unless otherwise noted. For TPS73401, V_{OUT} = 3.0V. Typical values are at T_J = +25°C.

TPS73401 DROPOUT VOLTAGE vs OUTPUT CURRENT

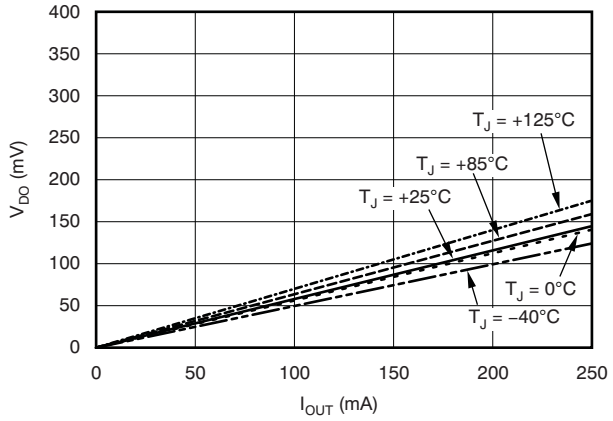

Figure 9.

POWER-SUPPLY RIPPLE REJECTION vs FREQUENCY (V_{IN} – V_{OUT} = 1.0V)

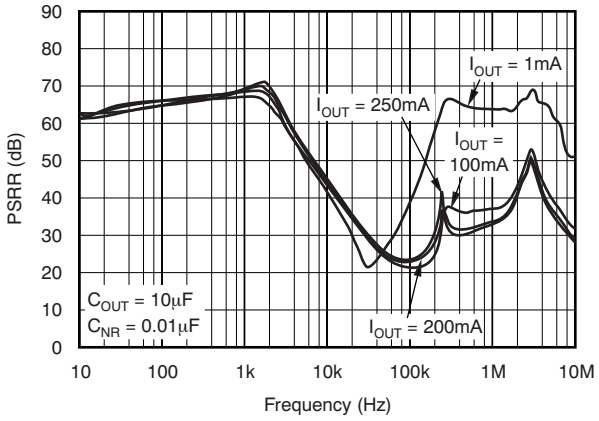

Figure 10.

POWER-SUPPLY RIPPLE REJECTION vs FREQUENCY (V_{IN} – V_{OUT} = 0.5V)

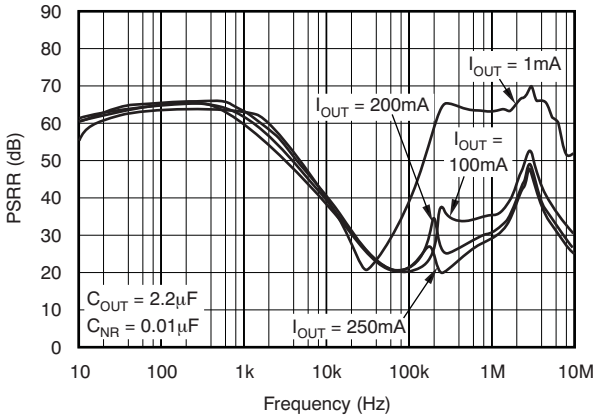

Figure 11.

POWER-SUPPLY RIPPLE REJECTION vs FREQUENCY (V_{IN} – V_{OUT} = 0.3V)

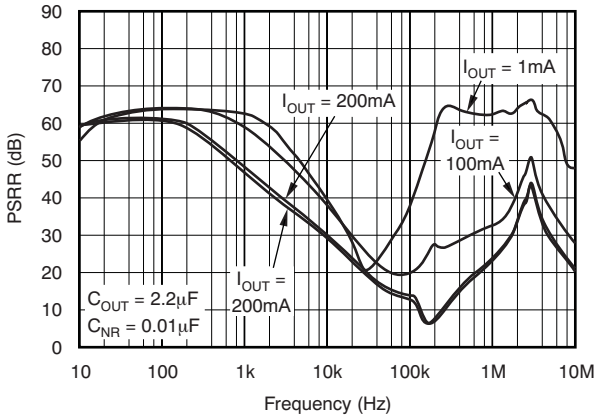

Figure 12.

TPS73425 TOTAL NOISE vs C_{NR}

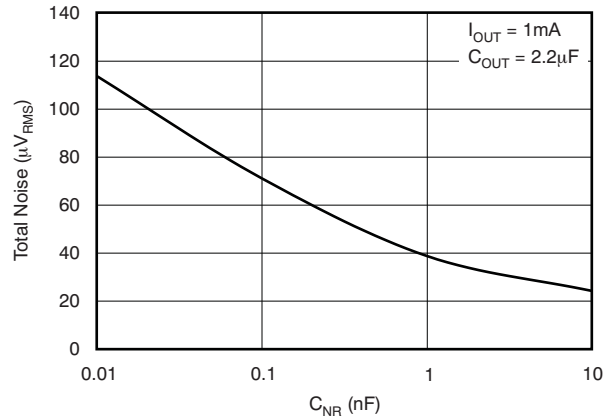

Figure 13.

TPS73425 TOTAL NOISE vs C_{OUT}

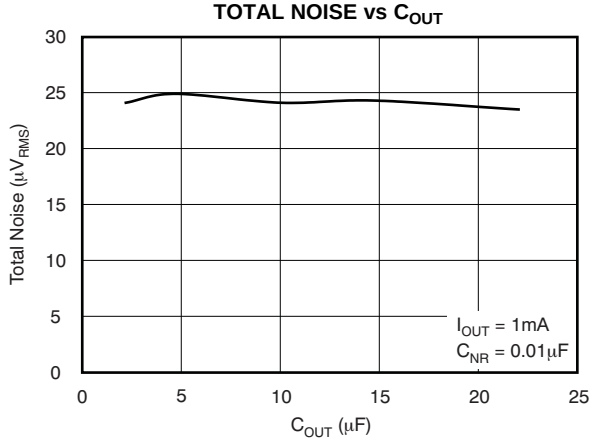

Figure 14.

Copyright © 2007–2009, Texas Instruments Incorporated

TYPICAL CHARACTERISTICS (continued)

Over operating temperature range (T_J = –40°C to +125°C); V_{IN} = $V_{OUT(TYP)}$ + 0.3V or 2.7V, whichever is greater; I_{OUT} = 1mA, V_{EN} = V_{IN}, C_{OUT} = 2.2µF, C_{NR} = 0.01µF, unless otherwise noted. For TPS73401, V_{OUT} = 3.0V. Typical values are at T_J = +25°C.

TPS73425
TURN-ON RESPONSE
(V_{IN} = V_{EN})

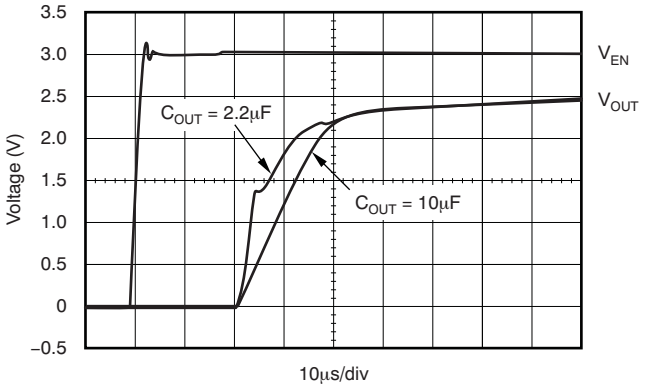

Figure 15.

TPS73425
ENABLE RESPONSE OVER STABLE V_{IN}

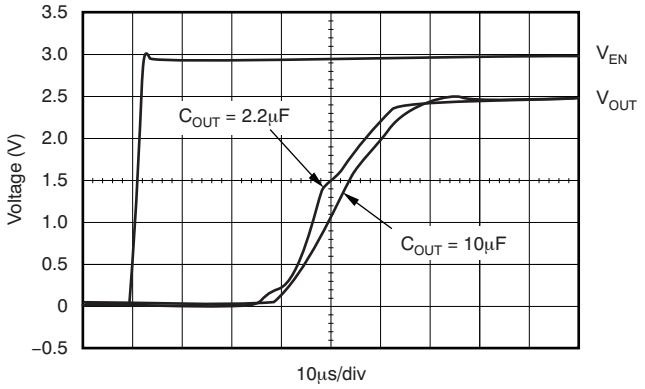

Figure 16.

TPS73410
POWER-UP/POWER-DOWN

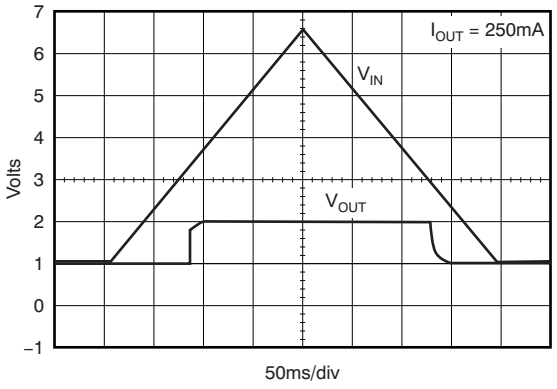

Figure 17.

TPS73410
LOAD TRANSIENT RESPONSE

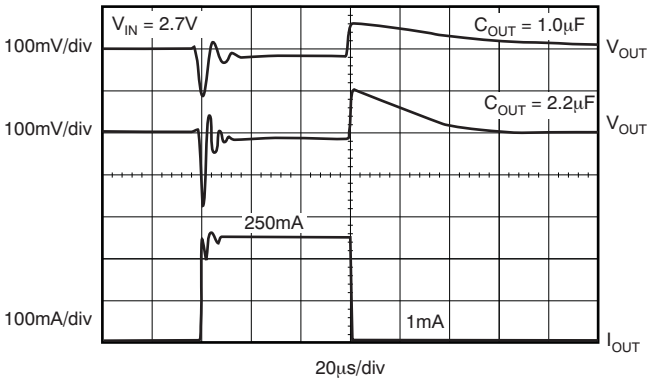

Figure 18.

TPS73410
LINE TRANSIENT RESPONSE

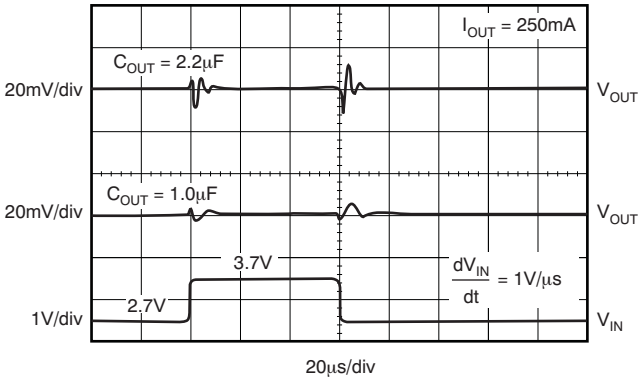

Figure 19.

APPLICATION INFORMATION

The TPS734xx family of LDO regulators combines the high performance required of many RF and precision analog applications with ultra-low current consumption. High PSRR is provided by a high gain, high bandwidth error loop with good supply rejection at very low headroom (V_{IN} – V_{OUT}). Fixed voltage versions provide a noise reduction pin to bypass noise generated by the bandgap reference and to improve PSRR while a quick-start circuit fast-charges this capacitor at startup. The combination of high performance and low ground current also make the TPS734xx an excellent choice for portable applications. All versions have thermal and over-current protection and are fully specified from –40°C to +125°C.

Figure 20 shows the basic circuit connections for fixed voltage models. Figure 21 gives the connections for the adjustable output version (TPS73401). R_1 and R_2 can be calculated for any output voltage using the formula in Figure 21.

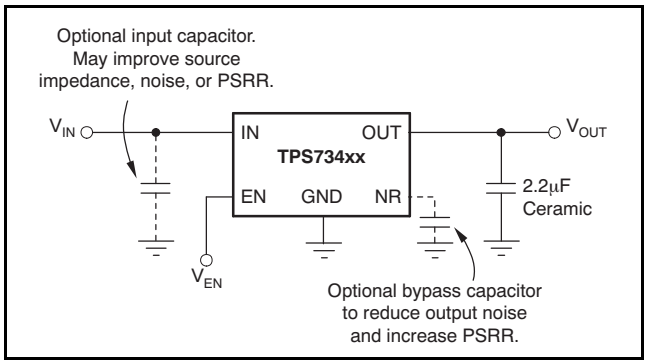

Figure 20. Typical Application Circuit for FIxed Voltage Versions

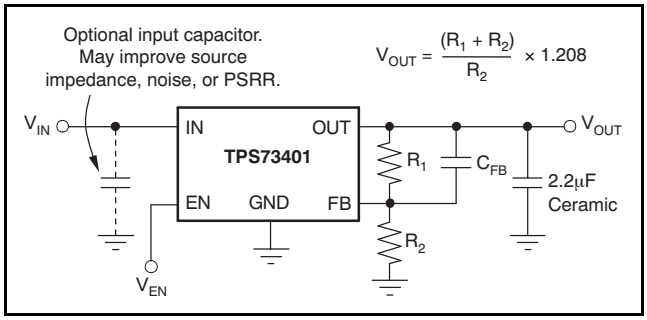

Figure 21. Typical Application Circuit for Adjustable Voltage Versions

Input and Output Capacitor Requirements

Although an input capacitor is not required for stability, it is good analog design practice to connect a 0.1µF to 1µF low equivalent series resistance (ESR) capacitor across the input supply near the regulator. The ground of this capacitor should be connected as close as the ground of output capacitor; a capacitor value of 0.1µF is enough in this condition. When it is difficult to place these two ground points close together, a 1µF capacitor is recommended. This capacitor counteracts reactive input sources and improves transient response, noise rejection, and ripple rejection. A higher-value capacitor may be necessary if large, fast rise-time load transients are anticipated, or if the device is located several inches from the power source. If source impedance is not sufficiently low, a 0.1µF input capacitor may be necessary to ensure stability.

The TPS734xx is designed to be stable with standard ceramic output capacitors of values 2.2µF or larger. X5R and X7R type capacitors are best because they have minimal variation in value and ESR over temperature. Maximum ESR of the output capacitor should be < 1.0Ω, so output capacitor type should be either ceramic or conductive polymer electrolytic.

Feedback Capacitor Requirements (TPS73401 only)

The feedback capacitor, C_{FB}, shown in Figure 21 is required for stability. For a parallel combination of R_1 and R_2 equal to 250kΩ, any value from 3pF to 1nF can be used. Fixed voltage versions have an internal 30pF feedback capacitor that is quick-charged at start-up. The adjustable version does not have this quick-charge circuit, so values below 5pF should be used to ensure fast startup; values above 47pF can be used to implement an output voltage soft-start. Larger value capacitors also improve noise slightly. The TPS73401 is stable in unity-gain configuration (OUT tied to FB) without C_{FB}.

Output Noise

In most LDOs, the bandgap is the dominant noise source. If a noise reduction capacitor (C_{NR}) is used with the TPS734xx, the bandgap does not contribute significantly to noise. Instead, noise is dominated by the output resistor divider and the error amplifier input. To minimize noise in a given application, use a 0.01µF noise reduction capacitor; for the adjustable version, smaller value resistors in the output resistor divider reduce noise. A parallel combination that gives 2µA of divider current has the same noise performance as a fixed voltage version. To further

Copyright © 2007–2009, Texas Instruments Incorporated

optimize noise, equivalent series resistance of the output capacitor can be set to approximately 0.2Ω. This configuration maximizes phase margin in the control loop, reducing total output noise by up to 10%.

Noise can be referred to the feedback point (FB pin) such that with C_{NR} = 0.01µF, total noise is given approximately by Equation 1:

$$V_N = \frac{11\mu V_{RMS}}{V} \times V_{OUT} \quad (1)$$

The TPS73401 adjustable version does not have the noise-reduction pin available, so ultra-low noise operation is not possible. Noise can be minimized according to the above recommendations.

Board Layout Recommendations to Improve PSRR and Noise Performance

To improve ac performance such as PSRR, output noise, and transient response, it is recommended that the board be designed with separate ground planes for V_{IN} and V_{OUT}, with each ground plane connected only at the GND pin of the device. In addition, the ground connection for the bypass capacitor should connect directly to the GND pin of the device.

Internal Current Limit

The TPS734xx internal current limit helps protect the regulator during fault conditions. During current limit, the output sources a fixed amount of current that is largely independent of output voltage. For reliable operation, the device should not be operated in current limit for extended periods of time.

The PMOS pass element in the TPS734xx has a built-in body diode that conducts current when the voltage at OUT exceeds the voltage at IN. This current is not limited, so if extended reverse voltage operation is anticipated, external limiting may be appropriate.

Shutdown

The enable pin (EN) is active high and is compatible with standard and low voltage TTL-CMOS levels. When shutdown capability is not required, EN can be connected to IN.

Dropout Voltage

The TPS734xx uses a PMOS pass transistor to achieve low dropout. When (V_{IN} – V_{OUT}) is less than the dropout voltage (V_{DO}), the PMOS pass device is in its linear region of operation and the input-to-output resistance is the $R_{DS, ON}$ of the PMOS pass element. Because the PMOS device behaves like a resistor in dropout, V_{DO} approximately scales with output current.

As with any linear regulator, PSRR and transient response are degraded as (V_{IN} – V_{OUT}) approaches dropout. This effect is shown in the Typical Characteristics section.

Startup and Noise Reduction Capacitor

Fixed voltage versions of the TPS734xx use a quick-start circuit to fast-charge the noise reduction capacitor, C_{NR}, if present (see the Functional Block Diagrams). This architecture allows the combination of very low output noise and fast start-up times. The NR pin is high impedance so a low leakage C_{NR} capacitor must be used; most ceramic capacitors are appropriate in this configuration.

Note that for fastest startup, V_{IN} should be applied first, then the enable pin (EN) driven high. If EN is tied to IN, startup is somewhat slower. Refer to the Typical Characteristics section. The quick-start switch is closed for approximately 135µs. To ensure that C_{NR} is fully charged during the quick-start time, a 0.01µF or smaller capacitor should be used.

Transient Response

As with any regulator, increasing the size of the output capacitor reduces over/undershoot magnitude but increases duration of the transient response. In the adjustable version, adding C_{FB} between OUT and FB improves stability and transient response. The transient response of the TPS734xx is enhanced by an active pull-down that engages when the output overshoots by approximately 5% or more when the device is enabled. When enabled, the pull-down device behaves like a 400Ω resistor to ground.

Undervoltage Lock-Out (UVLO)

The TPS734xx utilizes an undervoltage lock-out circuit to keep the output shut off until internal circuitry is operating properly. The UVLO circuit has a de-glitch feature so that it typically ignores undershoot transients on the input if they are less than 50µs duration.

Minimum Load

The TPS734xx is stable and well-behaved with no output load. To meet the specified accuracy, a minimum load of 1mA is required. Below 1mA at junction temperatures near +125°C, the output can drift up enough to cause the output pull-down to turn on. The output pull-down limits voltage drift to 5% typically but ground current could increase by approximately 50µA. In typical applications, the junction cannot reach high temperatures at light loads because there is no appreciable dissipated power. The specified ground current would then be valid at no load conditions in most applications.

Copyright © 2007–2009, Texas Instruments Incorporated

Thermal Information

Thermal Protection

Thermal protection disables the output when the junction temperature rises to approximately +165°C, allowing the device to cool. When the junction temperature cools to approximately +145°C the output circuitry is again enabled. Depending on power dissipation, thermal resistance, and ambient temperature, the thermal protection circuit may cycle on and off. This cycling limits the dissipation of the regulator, protecting it from damage as a result of overheating.

Any tendency to activate the thermal protection circuit indicates excessive power dissipation or an inadequate heatsink. For reliable operation, junction temperature should be limited to +125°C maximum. To estimate the margin of safety in a complete design (including heatsink), increase the ambient temperature until the thermal protection is triggered; use worst-case loads and signal conditions. For good reliability, thermal protection should trigger at least +35°C above the maximum expected ambient condition of your particular application. This configuration produces a worst-case junction temperature of +125°C at the highest expected ambient temperature and worst-case load.

The internal protection circuitry of the TPS734xx has been designed to protect against overload conditions. It was not intended to replace proper heatsinking. Continuously running the TPS734xx into thermal shutdown degrades device reliability.

Power Dissipation

The ability to remove heat from the die is different for each package type, presenting different considerations in the PCB layout. The PCB area around the device that is free of other components moves the heat from the device to the ambient air. Performance data for JEDEC low- and high-K boards are given in the *Dissipation Ratings* table. Using heavier copper increases the effectiveness in removing heat from the device. The addition of plated through-holes to heat-dissipating layers also improves the heatsink effectiveness.

Power dissipation depends on input voltage and load conditions. Power dissipation is equal to the product of the output current time the voltage drop across the output pass element, as shown in Equation 2:

$$P_D = (V_{IN} - V_{OUT}) \cdot I_{OUT} \quad (2)$$

Package Mounting

Solder pad footprint recommendations for the TPS734xx are available from the Texas Instruments web site at www.ti.com.

Copyright © 2007–2009, Texas Instruments Incorporated

PACKAGING INFORMATION

Orderable Device	Status (1)	Package Type	Package Drawing	Pins	Package Qty	Eco Plan (2)	Lead/Ball Finish	MSL Peak Temp (3)
TPS73401DDCR	PREVIEW	SOT	DDC	5	3000	TBD	Call TI	Call TI
TPS73401DDCT	PREVIEW	SOT	DDC	5	250	TBD	Call TI	Call TI
TPS73401DRVR	ACTIVE	SON	DRV	6	3000	Green (RoHS & no Sb/Br)	CU NIPDAU	Level-1-260C-UNLIM
TPS73401DRVT	ACTIVE	SON	DRV	6	250	Green (RoHS & no Sb/Br)	CU NIPDAU	Level-1-260C-UNLIM
TPS73418DRBR	PREVIEW	SON	DRB	8		TBD	Call TI	Call TI
TPS73418DRBT	PREVIEW	SON	DRB	8		TBD	Call TI	Call TI
TPS73418DRVR	ACTIVE	SON	DRV	6	3000	Green (RoHS & no Sb/Br)	CU NIPDAU	Level-1-260C-UNLIM
TPS73418DRVT	ACTIVE	SON	DRV	6	250	Green (RoHS & no Sb/Br)	CU NIPDAU	Level-1-260C-UNLIM
TPS73430DRBR	PREVIEW	SON	DRB	8		TBD	Call TI	Call TI
TPS73430DRBT	PREVIEW	SON	DRB	8		TBD	Call TI	Call TI
TPS73430DRVR	ACTIVE	SON	DRV	6	3000	Green (RoHS & no Sb/Br)	CU NIPDAU	Level-1-260C-UNLIM
TPS73430DRVT	ACTIVE	SON	DRV	6	250	Green (RoHS & no Sb/Br)	CU NIPDAU	Level-1-260C-UNLIM
TPS73433DDCR	PREVIEW	SOT	DDC	5	3000	TBD	Call TI	Call TI
TPS73433DDCT	PREVIEW	SOT	DDC	5	250	TBD	Call TI	Call TI
TPS73433DRBR	PREVIEW	SON	DRB	8		TBD	Call TI	Call TI
TPS73433DRBT	PREVIEW	SON	DRB	8		TBD	Call TI	Call TI
TPS73433DRVR	ACTIVE	SON	DRV	6	3000	Green (RoHS & no Sb/Br)	CU NIPDAU	Level-1-260C-UNLIM
TPS73433DRVT	ACTIVE	SON	DRV	6	250	Green (RoHS & no Sb/Br)	CU NIPDAU	Level-1-260C-UNLIM

(1) The marketing status values are defined as follows:
ACTIVE: Product device recommended for new designs.
LIFEBUY: TI has announced that the device will be discontinued, and a lifetime-buy period is in effect.
NRND: Not recommended for new designs. Device is in production to support existing customers, but TI does not recommend using this part in a new design.
PREVIEW: Device has been announced but is not in production. Samples may or may not be available.
OBSOLETE: TI has discontinued the production of the device.

(2) Eco Plan - The planned eco-friendly classification: Pb-Free (RoHS), Pb-Free (RoHS Exempt), or Green (RoHS & no Sb/Br) - please check http://www.ti.com/productcontent for the latest availability information and additional product content details.
TBD: The Pb-Free/Green conversion plan has not been defined.
Pb-Free (RoHS): TI's terms "Lead-Free" or "Pb-Free" mean semiconductor products that are compatible with the current RoHS requirements for all 6 substances, including the requirement that lead not exceed 0.1% by weight in homogeneous materials. Where designed to be soldered at high temperatures, TI Pb-Free products are suitable for use in specified lead-free processes.
Pb-Free (RoHS Exempt): This component has a RoHS exemption for either 1) lead-based flip-chip solder bumps used between the die and package, or 2) lead-based die adhesive used between the die and leadframe. The component is otherwise considered Pb-Free (RoHS compatible) as defined above.
Green (RoHS & no Sb/Br): TI defines "Green" to mean Pb-Free (RoHS compatible), and free of Bromine (Br) and Antimony (Sb) based flame retardants (Br or Sb do not exceed 0.1% by weight in homogeneous material)

(3) MSL, Peak Temp. -- The Moisture Sensitivity Level rating according to the JEDEC industry standard classifications, and peak solder temperature.

Important Information and Disclaimer: The information provided on this page represents TI's knowledge and belief as of the date that it is

provided. TI bases its knowledge and belief on information provided by third parties, and makes no representation or warranty as to the accuracy of such information. Efforts are underway to better integrate information from third parties. TI has taken and continues to take reasonable steps to provide representative and accurate information but may not have conducted destructive testing or chemical analysis on incoming materials and chemicals. TI and TI suppliers consider certain information to be proprietary, and thus CAS numbers and other limited information may not be available for release.

In no event shall TI's liability arising out of such information exceed the total purchase price of the TI part(s) at issue in this document sold by TI to Customer on an annual basis.

TAPE AND REEL INFORMATION

REEL DIMENSIONS

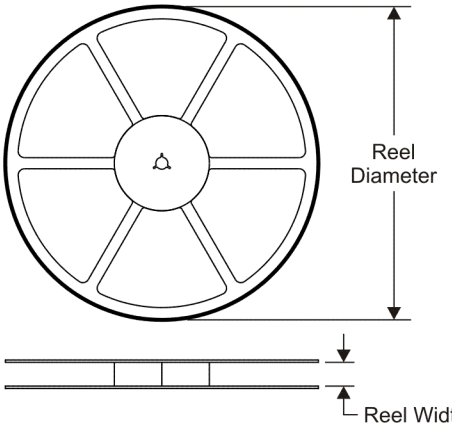

TAPE DIMENSIONS

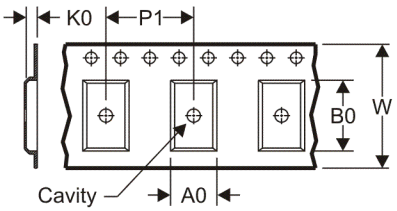

A0	Dimension designed to accommodate the component width
B0	Dimension designed to accommodate the component length
K0	Dimension designed to accommodate the component thickness
W	Overall width of the carrier tape
P1	Pitch between successive cavity centers

QUADRANT ASSIGNMENTS FOR PIN 1 ORIENTATION IN TAPE

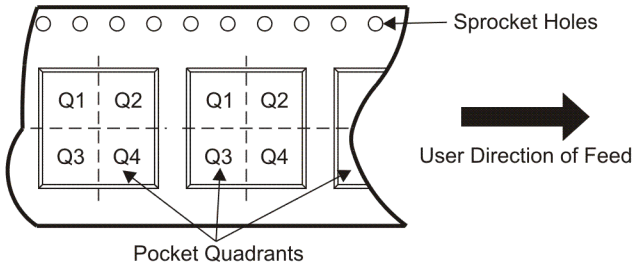

*All dimensions are nominal

Device	Package Type	Package Drawing	Pins	SPQ	Reel Diameter (mm)	Reel Width W1 (mm)	A0 (mm)	B0 (mm)	K0 (mm)	P1 (mm)	W (mm)	Pin1 Quadrant
TPS73401DRVR	SON	DRV	6	3000	179.0	8.4	2.2	2.2	1.2	4.0	8.0	Q2
TPS73401DRVT	SON	DRV	6	250	179.0	8.4	2.2	2.2	1.2	4.0	8.0	Q2
TPS73418DRVR	SON	DRV	6	3000	179.0	8.4	2.2	2.2	1.2	4.0	8.0	Q2
TPS73418DRVT	SON	DRV	6	250	179.0	8.4	2.2	2.2	1.2	4.0	8.0	Q2
TPS73430DRVR	SON	DRV	6	3000	179.0	8.4	2.2	2.2	1.2	4.0	8.0	Q2
TPS73430DRVT	SON	DRV	6	250	179.0	8.4	2.2	2.2	1.2	4.0	8.0	Q2
TPS73433DRVR	SON	DRV	6	3000	179.0	8.4	2.2	2.2	1.2	4.0	8.0	Q2
TPS73433DRVT	SON	DRV	6	250	179.0	8.4	2.2	2.2	1.2	4.0	8.0	Q2

TAPE AND REEL BOX DIMENSIONS

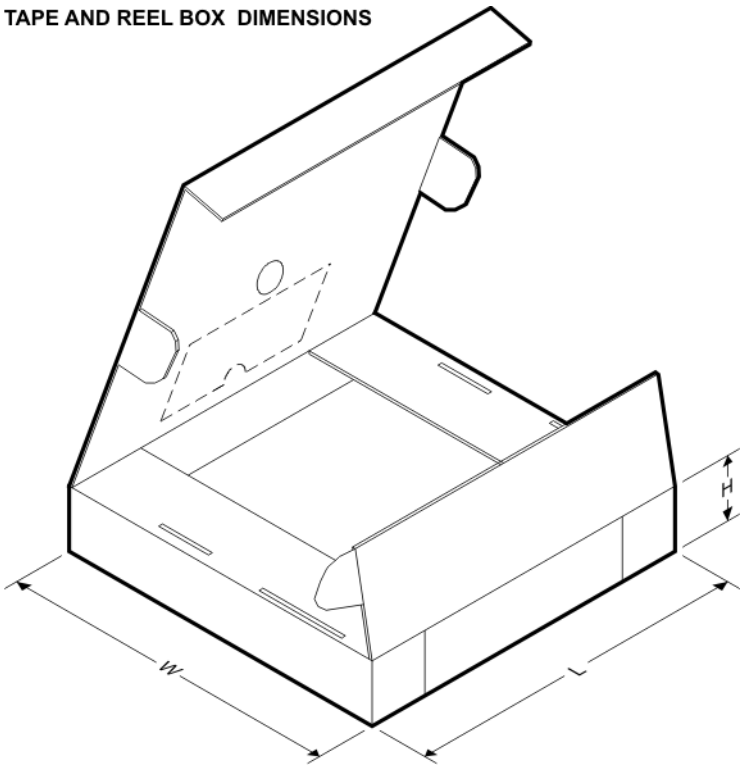

*All dimensions are nominal

Device	Package Type	Package Drawing	Pins	SPQ	Length (mm)	Width (mm)	Height (mm)
TPS73401DRVR	SON	DRV	6	3000	195.0	200.0	45.0
TPS73401DRVT	SON	DRV	6	250	195.0	200.0	45.0
TPS73418DRVR	SON	DRV	6	3000	195.0	200.0	45.0
TPS73418DRVT	SON	DRV	6	250	195.0	200.0	45.0
TPS73430DRVR	SON	DRV	6	3000	195.0	200.0	45.0
TPS73430DRVT	SON	DRV	6	250	195.0	200.0	45.0
TPS73433DRVR	SON	DRV	6	3000	195.0	200.0	45.0
TPS73433DRVT	SON	DRV	6	250	195.0	200.0	45.0

DDC (R–PDSO–G5) PLASTIC SMALL–OUTLINE

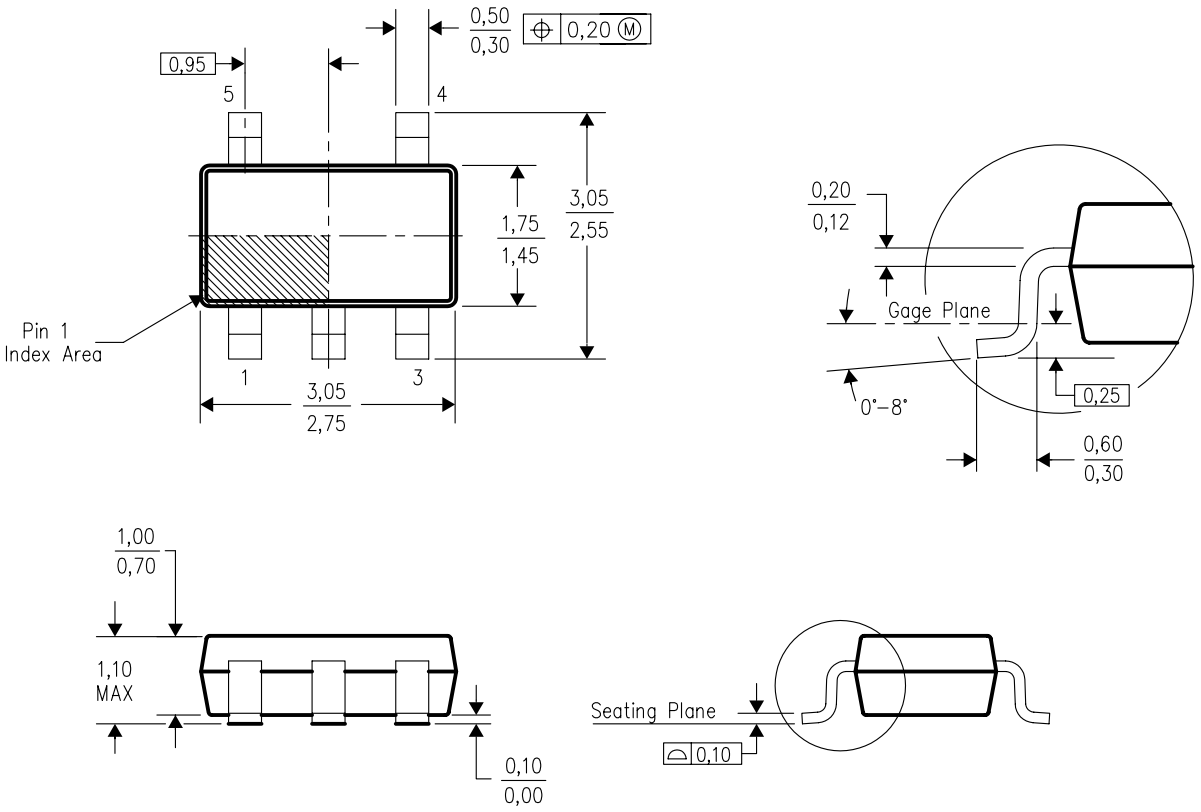

4204403–2/E 06/05

NOTES:
A. All linear dimensions are in millimeters.
B. This drawing is subject to change without notice.
C. Body dimensions do not include mold flash or protrusion.
D. Falls within JEDEC MO–193 variation AB (5 pin).

DRB (S–PDSO–N8) PLASTIC SMALL OUTLINE

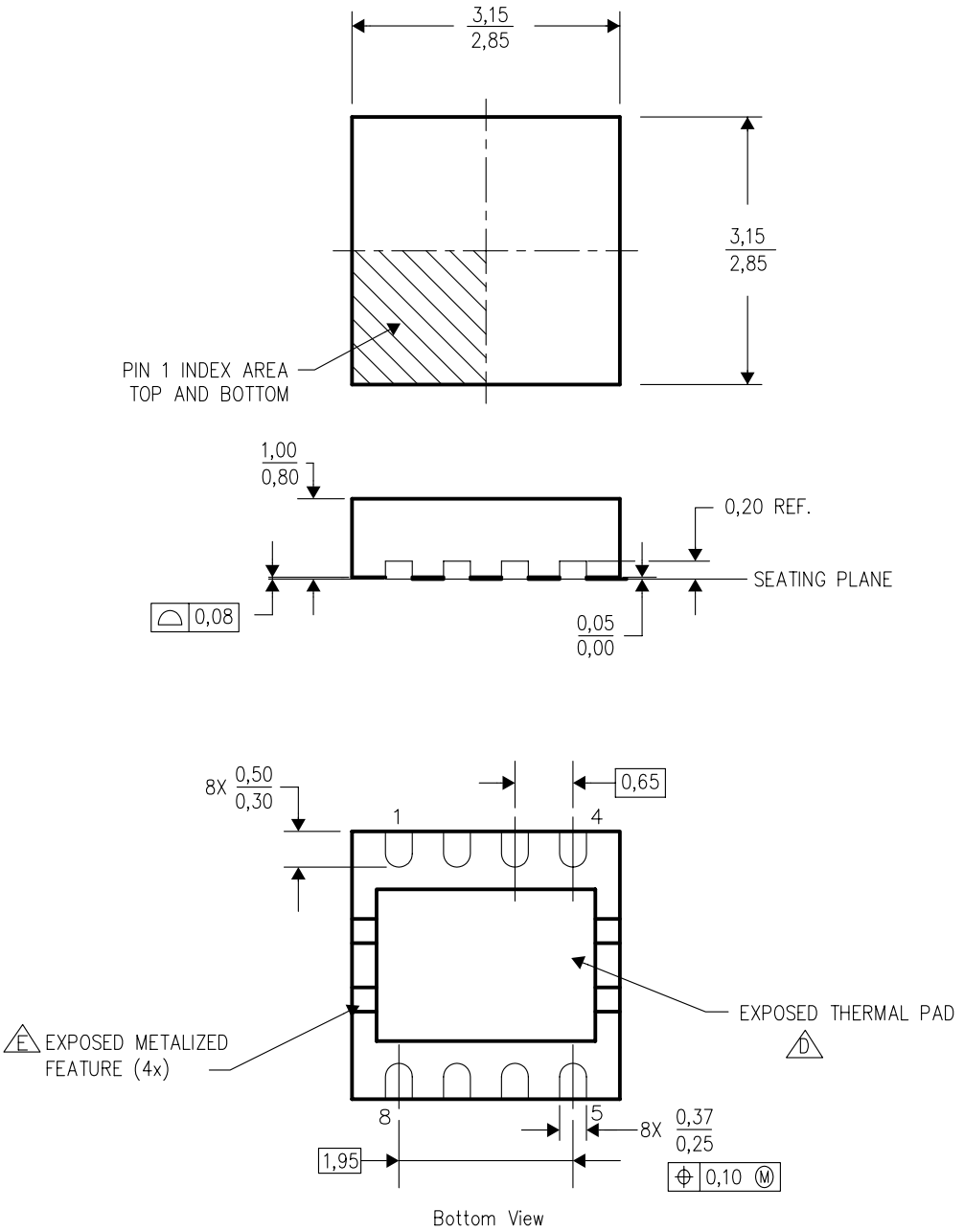

4203482/G 11/04

NOTES:
A. All linear dimensions are in millimeters. Dimensioning and tolerancing per ASME Y14.5M–1994.
B. This drawing is subject to change without notice.
C. Small Outline No–Lead (SON) package configuration.
D. The package thermal pad must be soldered to the board for thermal and mechanical performance. See the Product Data Sheet for details regarding the exposed thermal pad dimensions.
E. Metalized features are supplier options and may not be on the package.

DRV (S–PDSO–N6) PLASTIC SMALL OUTLINE

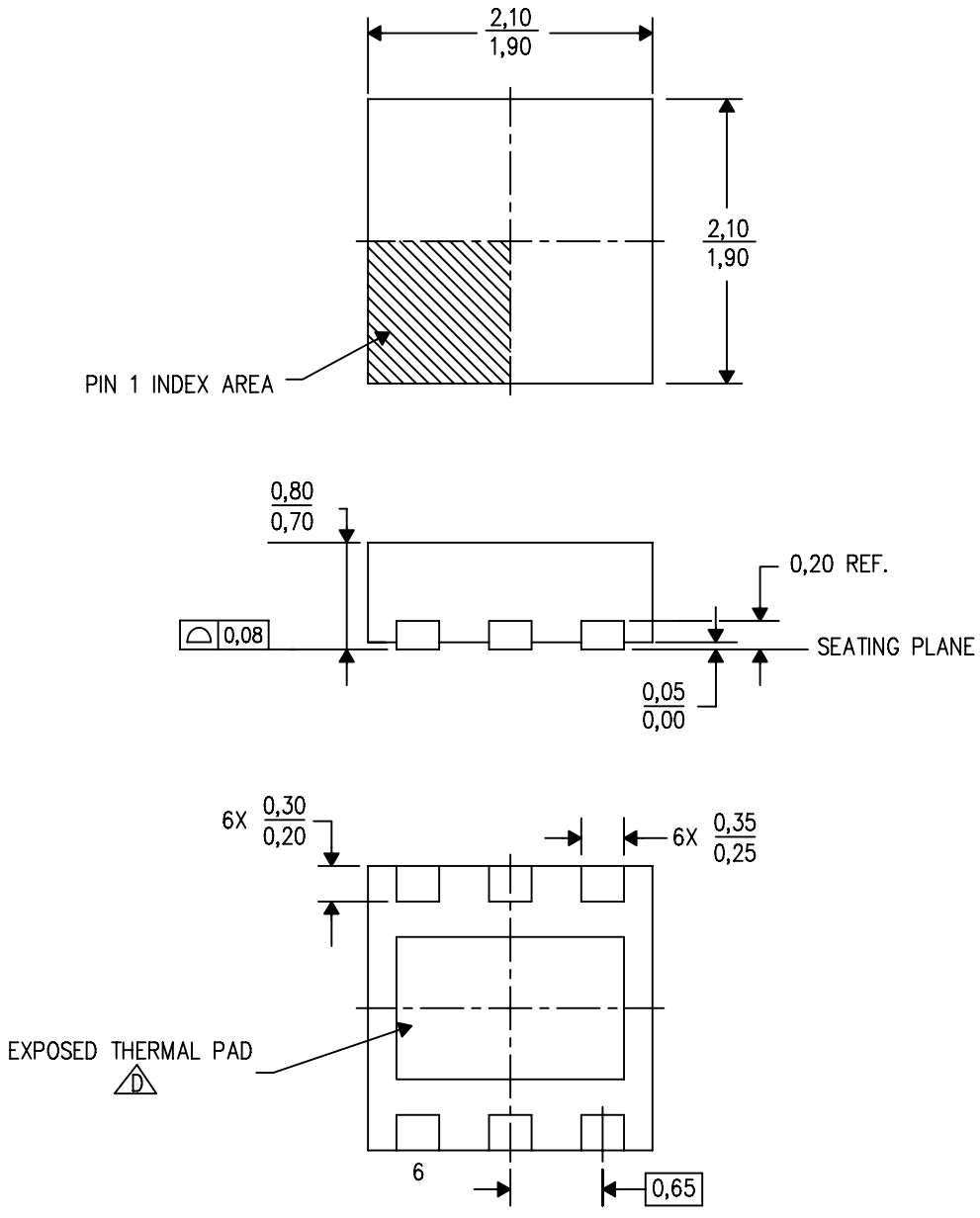

4206925/D 12/07

NOTES:
A. All linear dimensions are in millimeters. Dimensioning and tolerancing per ASME Y14.5M–1994.
B. This drawing is subject to change without notice.
C. Small Outline No–Lead (SON) package configuration.
D. The package thermal pad must be soldered to the board for thermal and mechanical performance. See the Product Data Sheet for details regarding the exposed thermal pad dimensions.

THERMAL PAD MECHANICAL DATA

DRV (S–PWSON–N6)

THERMAL INFORMATION

This package incorporates an exposed thermal pad that is designed to be attached directly to an external heatsink. The thermal pad must be soldered directly to the printed circuit board (PCB). After soldering, the PCB can be used as a heatsink. In addition, through the use of thermal vias, the thermal pad can be attached directly to the appropriate copper plane shown in the electrical schematic for the device, or alternatively, can be attached to a special heatsink structure designed into the PCB. This design optimizes the heat transfer from the integrated circuit (IC).

For information on the Quad Flatpack No–Lead (QFN) package and its advantages, refer to Application Report, Quad Flatpack No–Lead Logic Packages, Texas Instruments Literature No. SCBA017. This document is available at www.ti.com.

The exposed thermal pad dimensions for this package are shown in the following illustration.

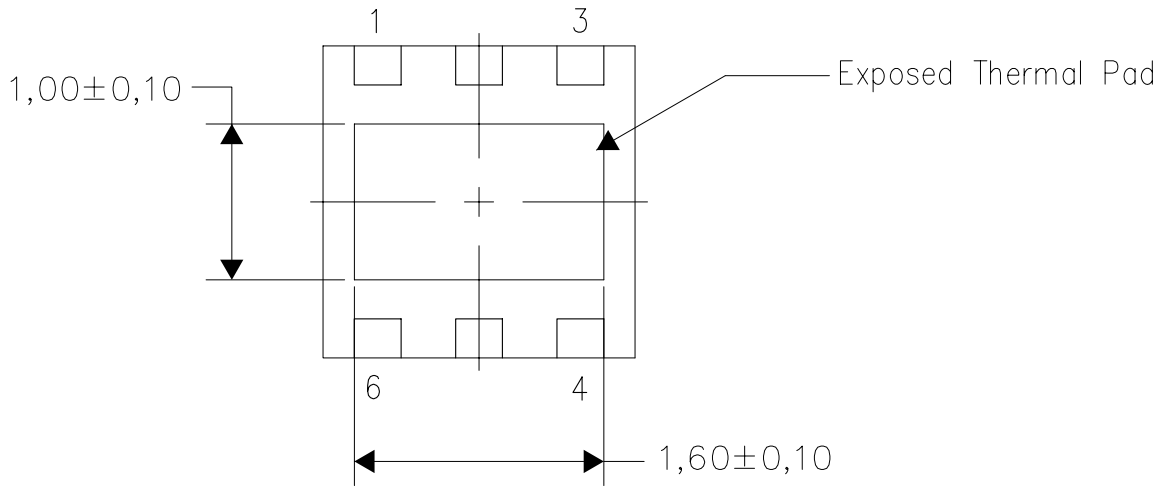

Bottom View

NOTE: All linear dimensions are in millimeters

Exposed Thermal Pad Dimensions

DRV (S–PWSON–N6)

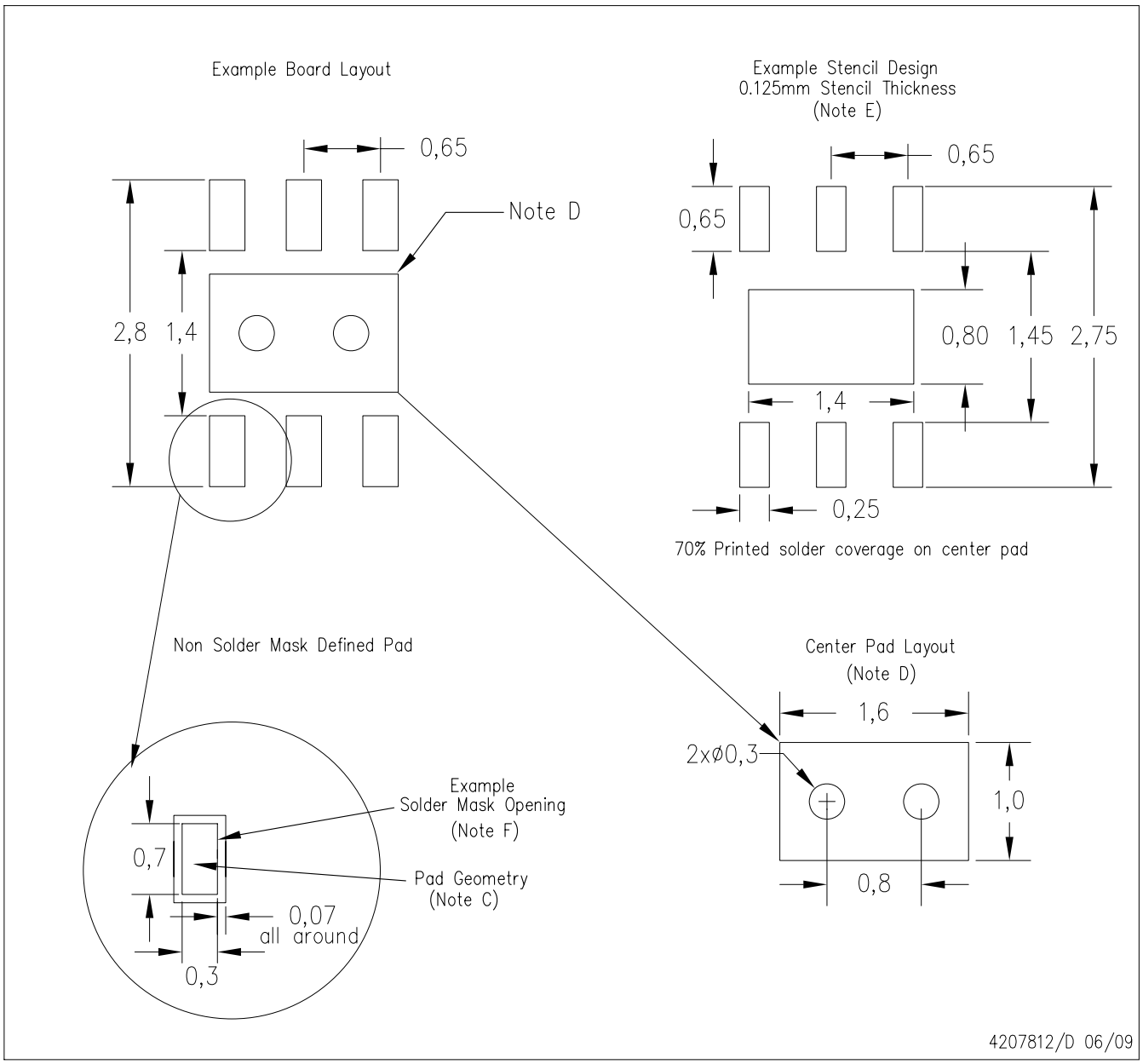

NOTES:
A. All linear dimensions are in millimeters.
B. This drawing is subject to change without notice.
C. Publication IPC–7351 is recommended for alternate designs.
D. This package is designed to be soldered to a thermal pad on the board. Refer to Application Note, QFN/SON PCB Attachment, Texas Instruments Literature No. SLUA271, and also the Product Data Sheets for specific thermal information, via requirements, and recommended board layout. These documents are available at www.ti.com <http://www.ti.com>.
E. Laser cutting apertures with trapezoidal walls and also rounding corners will offer better paste release. Customers should contact their board assembly site for stencil design recommendations. Refer to IPC 7525 for stencil design considerations.
F. Customers should contact their board fabrication site for solder mask tolerances.

IMPORTANT NOTICE

Texas Instruments Incorporated and its subsidiaries (TI) reserve the right to make corrections, modifications, enhancements, improvements, and other changes to its products and services at any time and to discontinue any product or service without notice. Customers should obtain the latest relevant information before placing orders and should verify that such information is current and complete. All products are sold subject to TI's terms and conditions of sale supplied at the time of order acknowledgment.

TI warrants performance of its hardware products to the specifications applicable at the time of sale in accordance with TI's standard warranty. Testing and other quality control techniques are used to the extent TI deems necessary to support this warranty. Except where mandated by government requirements, testing of all parameters of each product is not necessarily performed.

TI assumes no liability for applications assistance or customer product design. Customers are responsible for their products and applications using TI components. To minimize the risks associated with customer products and applications, customers should provide adequate design and operating safeguards.

TI does not warrant or represent that any license, either express or implied, is granted under any TI patent right, copyright, mask work right, or other TI intellectual property right relating to any combination, machine, or process in which TI products or services are used. Information published by TI regarding third-party products or services does not constitute a license from TI to use such products or services or a warranty or endorsement thereof. Use of such information may require a license from a third party under the patents or other intellectual property of the third party, or a license from TI under the patents or other intellectual property of TI.

Reproduction of TI information in TI data books or data sheets is permissible only if reproduction is without alteration and is accompanied by all associated warranties, conditions, limitations, and notices. Reproduction of this information with alteration is an unfair and deceptive business practice. TI is not responsible or liable for such altered documentation. Information of third parties may be subject to additional restrictions.

Resale of TI products or services with statements different from or beyond the parameters stated by TI for that product or service voids all express and any implied warranties for the associated TI product or service and is an unfair and deceptive business practice. TI is not responsible or liable for any such statements.

TI products are not authorized for use in safety-critical applications (such as life support) where a failure of the TI product would reasonably be expected to cause severe personal injury or death, unless officers of the parties have executed an agreement specifically governing such use. Buyers represent that they have all necessary expertise in the safety and regulatory ramifications of their applications, and acknowledge and agree that they are solely responsible for all legal, regulatory and safety-related requirements concerning their products and any use of TI products in such safety-critical applications, notwithstanding any applications-related information or support that may be provided by TI. Further, Buyers must fully indemnify TI and its representatives against any damages arising out of the use of TI products in such safety-critical applications.

TI products are neither designed nor intended for use in military/aerospace applications or environments unless the TI products are specifically designated by TI as military-grade or "enhanced plastic." Only products designated by TI as military-grade meet military specifications. Buyers acknowledge and agree that any such use of TI products which TI has not designated as military-grade is solely at the Buyer's risk, and that they are solely responsible for compliance with all legal and regulatory requirements in connection with such use.

TI products are neither designed nor intended for use in automotive applications or environments unless the specific TI products are designated by TI as compliant with ISO/TS 16949 requirements. Buyers acknowledge and agree that, if they use any non-designated products in automotive applications, TI will not be responsible for any failure to meet such requirements.

Following are URLs where you can obtain information on other Texas Instruments products and application solutions:

Products		**Applications**	
Amplifiers	amplifier.ti.com	Audio	www.ti.com/audio
Data Converters	dataconverter.ti.com	Automotive	www.ti.com/automotive
DLP® Products	www.dlp.com	Broadband	www.ti.com/broadband
DSP	dsp.ti.com	Digital Control	www.ti.com/digitalcontrol
Clocks and Timers	www.ti.com/clocks	Medical	www.ti.com/medical
Interface	interface.ti.com	Military	www.ti.com/military
Logic	logic.ti.com	Optical Networking	www.ti.com/opticalnetwork
Power Mgmt	power.ti.com	Security	www.ti.com/security
Microcontrollers	microcontroller.ti.com	Telephony	www.ti.com/telephony
RFID	www.ti-rfid.com	Video & Imaging	www.ti.com/video
RF/IF and ZigBee® Solutions	www.ti.com/lprf	Wireless	www.ti.com/wireless

Mailing Address: Texas Instruments, Post Office Box 655303, Dallas, Texas 75265
Copyright © 2009, Texas Instruments Incorporated