

Actual Size
(3,00 mm x 3,00 mm)

LOW INPUT VOLTAGE, CAP FREE 50-mA LOW-DROPOUT LINEAR REGULATORS

FEATURES

- **50-mA LDO**
- **Available in 1.5-V, 1.6-V, and 1.8-V Fixed-Output and Adjustable Versions**
- **Low Input Voltage Requirement (Down to 1.8 V)**
- **Small Output Capacitor, 0.1-μF**
- **Dropout Voltage Typically 50 mV at 50 mA**
- **Less Than 1 μA Quiescent Current in Shutdown Mode**
- **Thermal Protection**
- **Over Current Limitation**
- **5-Pin SOT-23 (DBV) Package**

APPLICATIONS

- **Portable Communication Devices**
- **Battery Powered Equipment**
- **PCMCIA Cards**
- **Personal Digital Assistants**
- **Modems**
- **Bar Code Scanners**
- **Backup Power Supplies**
- **SMPS Post Regulation**
- **Internet Audio**

DESCRIPTION

The TPS722xx family of LDO regulators is available in fixed voltage options that are commonly used to power the latest DSP's and microcontrollers with an adjustable option ranging from 1.22 V to 2.5 V. These regulators can be used in a wide variety of applications ranging from portable, battery-powered equipment to PC peripherals. The family features operation over a wide range of input voltages (1.8 V to 5.5 V) and low dropout voltage (50 mV at full load). Therefore, compared to many other regulators that require 2.5-V or higher input voltages for operation, these regulators can be operated directly from two AAA batteries. Also, the typical quiescent current (ground pin current) is low, starting at 85 μA during normal operation and 1 μA in shutdown mode. Thus, these regulators can be operated very efficiently and, in a battery-powered application, help extend the longevity of the device.

Similar LDO regulators require 1-μF or larger output capacitors for stability. However, this regulator uses an internal compensation scheme that stabilizes the feedback loop over the full range of input voltages and load currents with output capacitances as low as 0.1-μF. Ceramic capacitors of this size are relatively inexpensive and available in small footprints.

This family of regulators is particularly suited as a portable power supply solution due to its minimal board space requirement and 1.8-V minimum input voltage. Being able to use two off-the-shelf, AAA, batteries makes system design easier and also reduces component cost. Moreover, the solution will be more efficient than if a regulator with a higher input voltage is used.

DBV PACKAGE
(TOP VIEW)

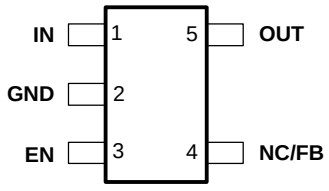

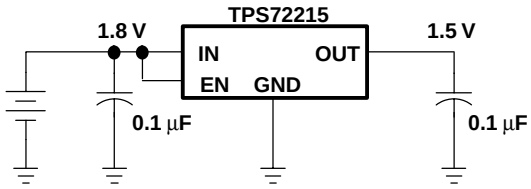

Please be aware that an important notice concerning availability, standard warranty, and use in critical applications of Texas Instruments semiconductor products and disclaimers thereto appears at the end of this data sheet.

PRODUCTION DATA information is current as of publication date. Products conform to specifications per the terms of Texas Instruments standard warranty. Production processing does not necessarily include testing of all parameters.

Copyright © 2002, Texas Instruments Incorporated



These devices have limited built-in ESD protection. The leads should be shorted together or the device placed in conductive foam during storage or handling to prevent electrostatic damage to the MOS gates.

ORDERING INFORMATION

T_J	VOLTAGE	PACKAGE	PART NUMBER		SYMBOL
–40°C to 125°C	Adjustable	SOT-23 (DBV)	TPS72201DBVT(1)	TPS72201DBVR(2)	PELI
	1.5 V		TPS72215DBVT(1)	TPS72215DBVR(2)	PENI
	1.6 V		TPS72216DBVT(1)	TPS72216DBVR(2)	PHGI
	1.8 V		TPS72218DBVT(1)	TPS72218DBVR(2)	PEMI

(1) The DBVT indicates tape and reel of 250 parts.
(2) The DBVR indicates tape and reel of 3000 parts.

ABSOLUTE MAXIMUM RATINGS

over operating free-air temperature range unless otherwise noted(1)

	TPS72201, TPS72215 TPS72216, TPS72218
Input voltage range (1)	–0.3 V to 7 V
Voltage range at EN	–0.3 V to 7 V
Voltage on OUT, FB, NC	–0.3 V to V_I + 0.3 V
Peak output current	Internally limited
ESD rating, HBM	3 kV
Continuous total power dissipation	See Dissipation Rating Table
Operating virtual junction temperature range, T_J	–40°C to 150°C
Storage temperature range, T_{stg}	–65°C to 150°C

(1) Stresses beyond those listed under "absolute maximum ratings" may cause permanent damage to the device. These are stress ratings only, and functional operation of the device at these or any other conditions beyond those indicated under "recommended operating conditions" is not implied. Exposure to absolute-maximum-rated conditions for extended periods may affect device reliability.
(2) All voltage values are with respect to network ground terminal.

PACKAGE DISSIPATION RATING

BOARD	PACKAGE	$R_{\theta JC}$	$R_{\theta JA}$	DERATING FACTOR ABOVE T_A = 25°C	$T_A \le 25°C$ POWER RATING	T_A = 70°C POWER RATING	T_A = 85°C POWER RATING
Low K(1)	DBV	65.8 °C/W	259 °C/W	3.9 mW/°C	386 mW	212 mW	154 mW
High K(2)	DBV	65.8 °C/W	180 °C/W	5.6 mW/°C	555 mW	305 mW	222 mW

(1) The JEDEC Low K (1s) board design used to derive this data was a 3 inch x 3 inch, two-layer board with 2 ounce copper traces on top of the board.
(2) The JEDEC High K (2s2p) board design used to derive this data was a 3 inch x 3 inch, multilayer board with 1 ounce internal power and ground planes and 2 ounce copper traces on top and bottom of the board.

ELECTRICAL CHARACTERISTICS

over recommended operating free-air temperature range, $V_I = V_{O(typ)} + 1$ V, I_O= 1 mA, EN = V_I, C_O = 4.7 µF (unless otherwise noted)

PARAMETER			TEST CONDITIONS		MIN	TYP	MAX	UNIT
V_I	Input voltage(1)				1.8		5.5	V
I_O	Continuous output current				0		50	mA
T_J	Operating junction temperature				–40		125	°C
V_O	Output voltage	TPS72201	0 µA< I_O < 50 mA,(1)	1.2 V ≤ V_O ≤ 2.5 V	0.97 V_O		1.03 V_O	V
		TPS72215	T_J = 25°C			1.5		
			0 µA< I_O < 50 mA	2.5 V ≤ V_I ≤ 5.5 V	1.455		1.545	
		TPS72216	T_J = 25°C			1.6		
			0 µA< I_O < 50 mA	2.6 V ≤ V_I ≤ 5.5 V	1.552		1.648	
		TPS72218	T_J = 25°C			1.8		
			0 µA< I_O < 50 mA	2.5 V ≤ V_I ≤ 5.5 V	1.746		1.854	
$I_{(Q)}$	Quiescent current (GND terminal current)		T_J = 25°C			85		µA
							120	
			I_O = 50 mA	T_J = 25°C		275		
			I_O = 50 mA				550	
	Standby current		EN < 0.5 V,	T_J = 25°C		0.01		µA
			EN < 0.5 V				1	
V_n	Output noise voltage	TPS72215	BW = 200 Hz to 100 kHz, T_J = 25°C	C_O = 1 µF		90		µV
V_{ref}	Reference voltage		T_J = 25°C			1.225		V
PSRR	Ripple rejection		f = 100 Hz, C_O = 10 µF, I_O = 50 mA	T_J = 25°C, See Note 1		48		dB
	Current limit		See Note 2		175		525	mA
	Output voltage line regulation ($\Delta V_O/V_O$)(3)		V_O + 1 V < V_I ≤ 5.5 V	T_J = 25°C		0.03	0.09	%/V
							0.1	
	Output voltage load regulation	TPS72218	0 < I_O < 50 mA,	T_J = 25°C		0.2		mV
V_{IH}	EN high level input				1.4			V
V_{IL}	EN low level input				–0.2		0.4	V
I_I	EN input current		EN = 0 V			–0.01		µA
			EN = IN			–0.01		
V_{DO}	Dropout voltage (4)	TPS72218	I_O = 50 mA	T_J = 25°C		50		mV
		TPS72201	I_O = 50 mA	1.2 V ≤ V_O ≤ 5.2 V			100	
I_n	Feedback input current	TPS72201					1	µA
	Thermal shutdown temperature					170		°C
	Thermal shutdown hysteresis					20		°C

(1) Minimum IN operating voltage is 1.8 V or $V_{O(max)}$ + V_{DO} (max load), whichever is greater.
(2) Test condition includes, output voltage V_O = 1 V and pulse duration = 10 mS.
(3) V_{Imax} = 5.5 V, V_{Imin} = (V_O + 1) or 1.8 V whichever is greater.

$$\text{Line regulation (mV)} = (\%/V) \times \frac{V_O\left(5.5\ V - V_{Imin}\right)}{100} \times 1000$$

(4) Dropout voltage is defined as the differential voltage between V_O and V_I when V_O drops 100 mV below the value measured with $V_I = V_O$ + 1 V.

FUNCTIONAL BLOCK DIAGRAM—ADJUSTABLE VERSION

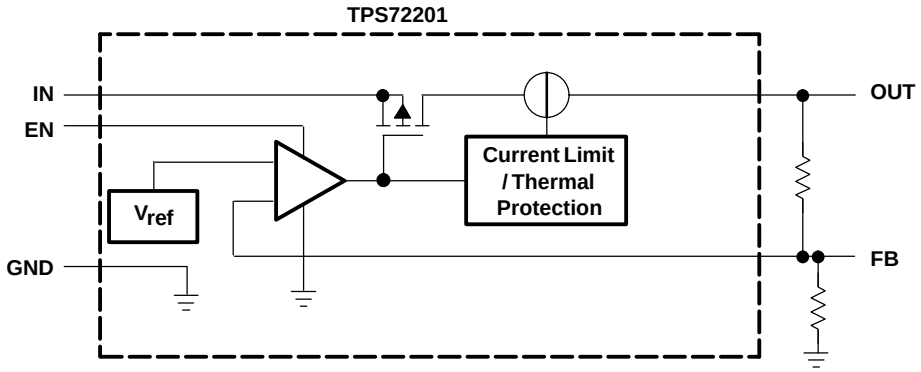

FUNCTIONAL BLOCK DIAGRAM—FIXED VERSION

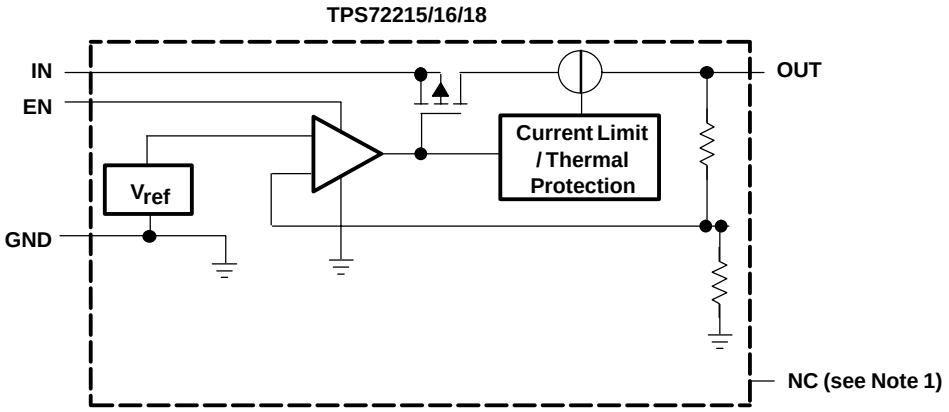

(1) This pin must be left floating and not connected to GND

Terminal Functions

TERMINAL NAME	TERMINAL NO.	I/O	DESCRIPTION
GND	2		Ground
EN	3	I	Enable input
IN	1	I	Input supply voltage
NC/FB	4	I	NC = Not connected (see Note 6); FB = Feedback (adjustable option TPS72201)
OUT	5	O	Regulated output voltage

TYPICAL CHARACTERISTICS

TPS72218
OUTPUT VOLTAGE vs OUTPUT CURRENT

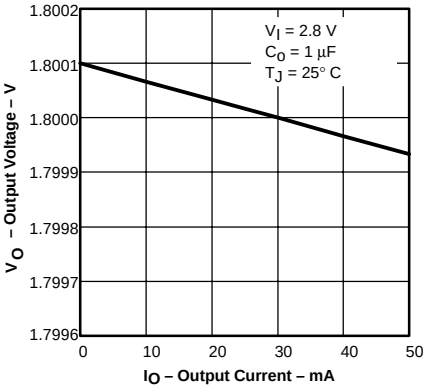

Figure 1

TPS72218
OUTPUT VOLTAGE vs JUNCTION TEMPERATURE

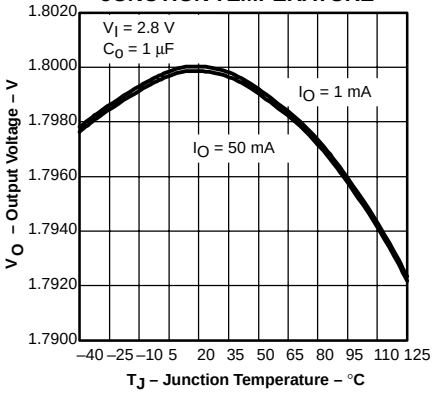

Figure 2

TPS72218
GROUND CURRENT vs JUNCTION TEMPERATURE

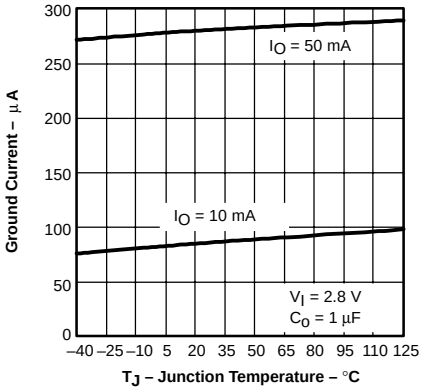

Figure 3

TPS72218
GROUND CURRENT vs OUTPUT CURRENT

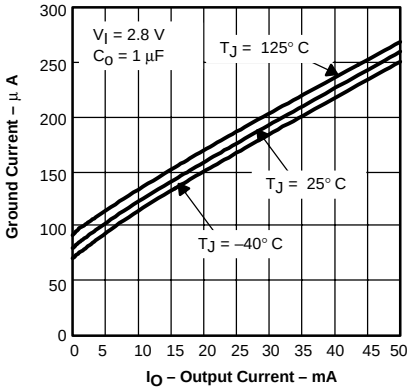

Figure 4

TPS72218
OUTPUT SPECTRAL NOISE DENSITY vs FREQUENCY

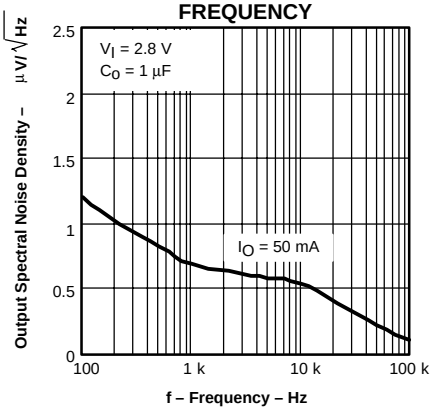

Figure 5

TPS72218
OUTPUT IMPEDANCE vs FREQUENCY

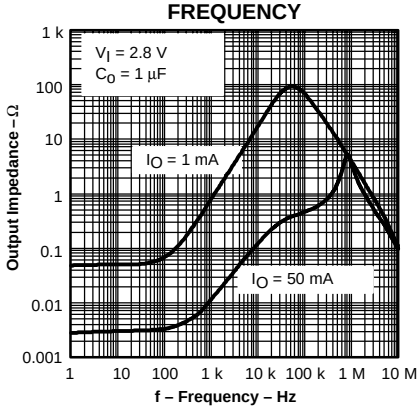

Figure 6

TPS72218
DROPOUT VOLTAGE vs JUNCTION TEMPERATURE

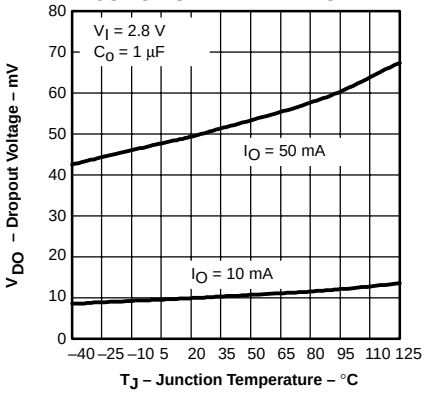

Figure 7

TPS72118
POWER SUPPLY RIPPLE REJECTION vs FREQUENCY

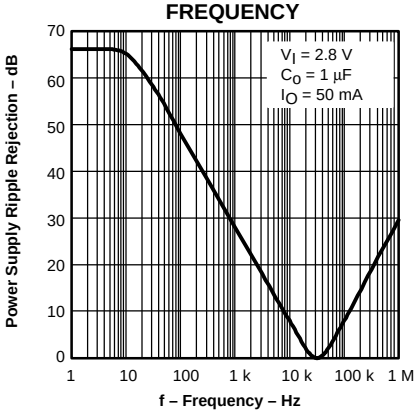

Figure 8

TPS72218
OUTPUT VOLTAGE, ENABLE VOLTAGE vs TIME (START-UP)

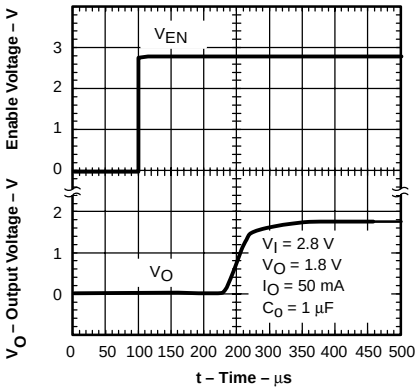

Figure 9

TYPICAL CHARACTERISTICS

TPS72218
LINE TRANSIENT RESPONSE

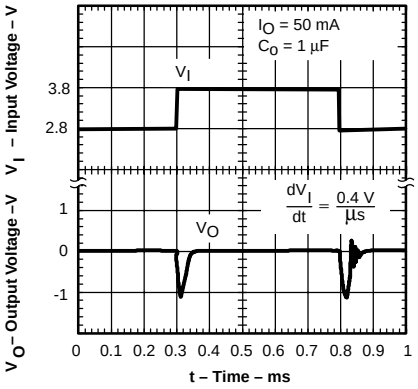

Figure 10

TPS72218
LOAD TRANSIENT RESPONSE

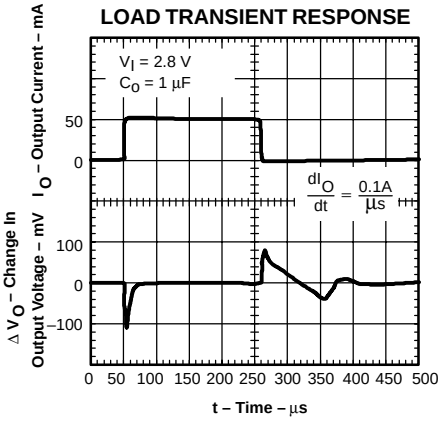

Figure 11

POWER UP / POWER DOWN

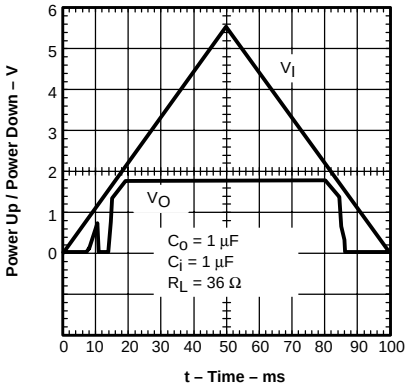

Figure 12

DC DROPOUT VOLTAGE
vs
OUTPUT CURRENT

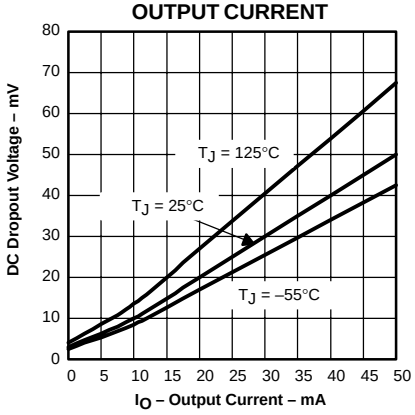

Figure 13

TPS72201
DROPOUT VOLTAGE
vs
INPUT VOLTAGE

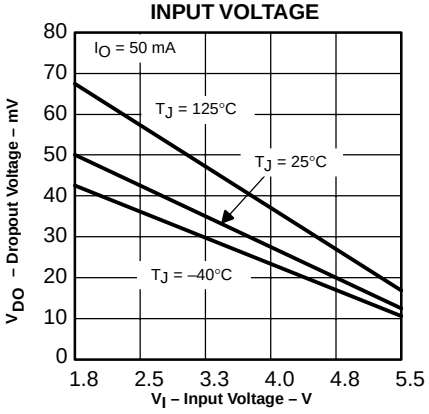

Figure 14

MINIMUM REQUIRED INPUT VOLTAGE
vs
OUTPUT VOLTAGE

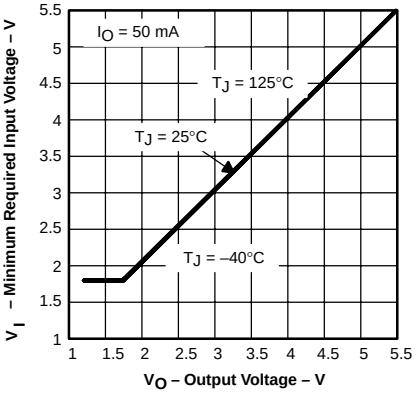

Figure 15

APPLICATION INFORMATION

The TPS722xx family of low-dropout (LDO) regulators functions with a very low input voltage (>1.8 V). The dropout voltage is typically 50 mV at full load. Typical quiescent current (ground pin current) is only 85 μA and drops to 1 μA in the shutdown mode.

DEVICE OPERATION

The TPS722xx family can be operated at low input voltages due to low voltage circuit design techniques and a PMOS pass element that exhibits low dropout.

A logic low on the enable input, EN, shuts off the output and reduces the supply current to less than 1 μA. EN may be tied to V_{IN} in applications where the shutdown feature is not used.

Current limiting and thermal protection prevent damage by excessive output current and/or power dissipation. The device switches into a constant-current mode at approximately 350 mA; further load reduces the output voltage instead of increasing the output current. The thermal protection shuts the regulator off if the junction temperature rises above 170°C. Recovery is automatic when the junction temperature drops approximately 20°C below the high temperature trip point. The PMOS pass element includes a back diode that safely conducts reverse current when the input voltage level drops below the output voltage level.

A typical application circuit is shown in Figure 16.

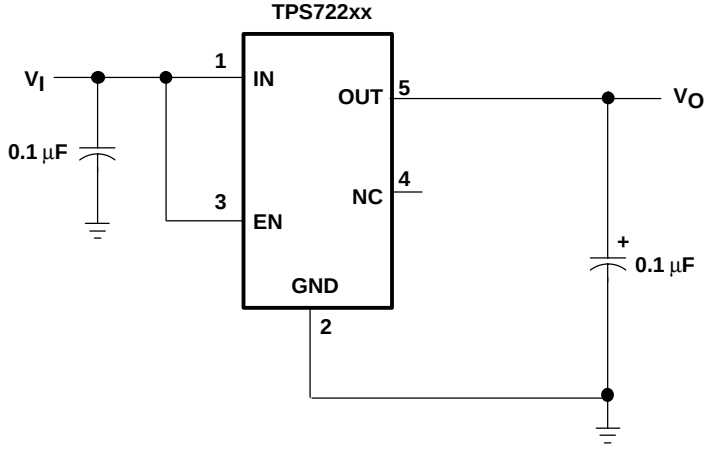

Figure 16. Typical Application Circuit

DUAL SUPPLY APPLICATION

In portable, battery-powered electronics, separate power rails for the DSP or microcontroller core voltage (V_{CORE}) and I/O peripherals (V_{IO}) are usually necessary. The TPS721xx family of LDO linear regulators is ideal for providing $V_{(CORE)}$ for the DSP or microcontroller. As shown in Figure 17, two AAA batteries provide an input voltage to a boost converter and the TPS72115 LDO linear regulator. The batteries combine input voltage ranges from 3.0 V down to 1.8 V near the end of their useful lives. Therefore, a boost converter is necessary to provide the typical 3.3 V needed for V_{IO}, and the TPS72115 linear regulator provides a regulated $V_{(CORE)}$ voltage, which in this example is 1.5 V. Although there is no explicit circuitry to perform power-up sequencing of first $V_{(CORE)}$ then V_{IO}, the output of the linear regulator reaches its regulated voltage much faster (<400 μs) than the output of any switching type boost converter due to the inherent slow start up of those types of converters. Assuming a boost converter with minimum V_I of 1.8 V is appropriately chosen, this power supply solution can be used over the entire life of the two off-the-shelf AAA batteries. Thus, this solution is very efficient and the design time and overall cost of the solution is minimized.

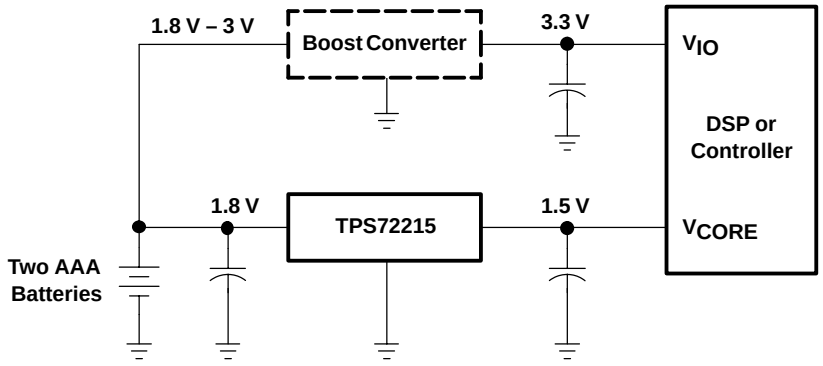

Figure 17. Dual Supply Application Circuit

EXTERNAL CAPACITOR REQUIREMENTS

A 0.1-μF ceramic bypass capacitor is required on both the input and output for stability. Larger capacitors improve transient response, noise rejection, and ripple rejection. A higher value electrolytic input capacitor may be necessary if large, fast rise time load transient are anticipated, and/or there is significant input resistance from the device to the input power supply.

POWER DISSIPATION AND JUNCTION TEMPERATURE

Specified regulator operation is assured to a junction temperature of 125°C; the maximum junction temperature allowable without damaging the device is 150°C. This restriction limits the power dissipation the regulator can handle in any given application. To ensure the junction temperature is within acceptable limits, calculate the maximum allowable dissipation, $P_{D(max)}$, and the actual dissipation, P_D, which must be less than or equal to $P_{D(max)}$.

The maximum-power-dissipation limit is determined using the following equation:

$$P_{D(max)} = \frac{T_J max - T_A}{R_{\theta JA}}$$

Where:

$T_J max$ is the maximum allowable junction temperature.

$R_{\theta JA}$ is the thermal resistance junction-to-ambient for the package, see the power dissipation rating table.

T_A is the ambient temperature.

The regulator dissipation is calculated using:

$$P_D = \left(V_I - V_O\right) \times I_O$$

Power dissipation resulting from quiescent current is negligible.

PROGRAMMING THE TPS72201 ADJUSTABLE LDO REGULATOR

The output voltage of the TPS72201 adjustable regulator is programmed using an external resistor divider as shown in Figure 18. The output voltage is calculated using:

$$V_O = V_{ref} \times \left(1 + \frac{R1}{R2}\right) \quad (1)$$

Where:

V_{ref} = 1.225 V typ (the internal reference voltage)

Resistors R1 and R2 should be chosen for approximately 10-μA divider current. Lower value resistors can be used but offer no inherent advantage and waste more power. Higher values should be avoided, as leakage currents at FB increase the output voltage error. The recommended design procedure is to choose R2 = 121 kΩ to set the divider current at 10 μA and then calculate R1 using:

$$R1 = \left(\frac{V_O}{V_{ref}} - 1\right) \times R2 \quad (2)$$

Where:

V_{ref} = 1.225

OUTPUT VOLTAGE PROGRAMMING GUIDE

OUTPUT VOLTAGE (V)	DIVIDER RESISTANCE (kΩ)†	
	R1	R2
2.5	127	121
3.3	205	121

† 1% values shown.

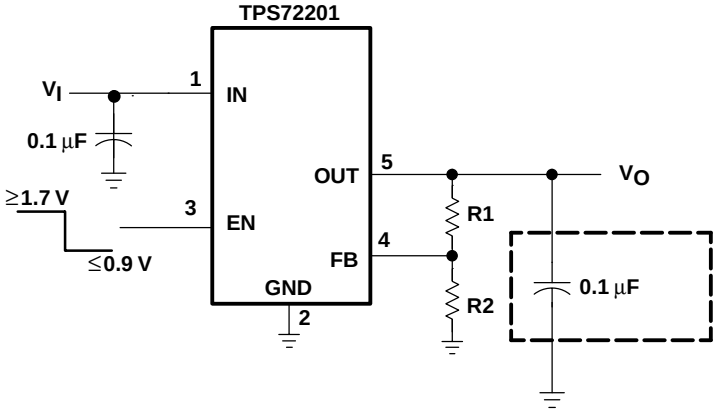

Figure 18. TPS72201 Adjustable LDO Regulator Programming

REGULATOR PROTECTION

The TPS722xx pass element has a built-in back diode that safely conducts reverse current when the input voltage drops below the output voltage (e.g., during power down). Current is conducted from the output to the input and is not internally limited. If extended reverse voltage is anticipated, external limiting might be appropriate.

The TPS722xx also features internal current limiting and thermal protection. During normal operation, the TPS722xx limits output current to approximately 350 mA. When current limiting engages, the output voltage scales back linearly until the overcurrent condition ends. While current limiting is designed to prevent gross device failure, care should be taken not to exceed the power dissipation ratings of the package. If the temperature of the device exceeds 170°C, thermal-protection circuitry shuts it down. Once the device has cooled down to below 150°C, regulator operation resumes.

PACKAGING INFORMATION

Orderable Device	Status (1)	Package Type	Package Drawing	Pins	Package Qty	Eco Plan (2)	Lead/Ball Finish	MSL Peak Temp (3)	Op Temp (°C)	Top-Side Markings (4)	Samples
TPS72201DBVR	ACTIVE	SOT-23	DBV	5	3000	Green (RoHS & no Sb/Br)	CU NIPDAU	Level-1-260C-UNLIM	-40 to 125	PELI	Samples
TPS72201DBVRG4	ACTIVE	SOT-23	DBV	5	3000	Green (RoHS & no Sb/Br)	CU NIPDAU	Level-1-260C-UNLIM	-40 to 125	PELI	Samples
TPS72201DBVT	ACTIVE	SOT-23	DBV	5	250	Green (RoHS & no Sb/Br)	CU NIPDAU	Level-1-260C-UNLIM	-40 to 125	PELI	Samples
TPS72201DBVTG4	ACTIVE	SOT-23	DBV	5	250	Green (RoHS & no Sb/Br)	CU NIPDAU	Level-1-260C-UNLIM	-40 to 125	PELI	Samples
TPS72215DBVT	ACTIVE	SOT-23	DBV	5	250	Green (RoHS & no Sb/Br)	CU NIPDAU	Level-1-260C-UNLIM	-40 to 125	PENI	Samples
TPS72215DBVTG4	ACTIVE	SOT-23	DBV	5	250	Green (RoHS & no Sb/Br)	CU NIPDAU	Level-1-260C-UNLIM	-40 to 125	PENI	Samples
TPS72216DBVT	ACTIVE	SOT-23	DBV	5	250	Green (RoHS & no Sb/Br)	CU NIPDAU	Level-1-260C-UNLIM	-40 to 125	PHGI	Samples
TPS72216DBVTG4	ACTIVE	SOT-23	DBV	5	250	Green (RoHS & no Sb/Br)	CU NIPDAU	Level-1-260C-UNLIM	-40 to 125	PHGI	Samples
TPS72218DBVR	ACTIVE	SOT-23	DBV	5	3000	Green (RoHS & no Sb/Br)	CU NIPDAU	Level-1-260C-UNLIM	-40 to 125	PEMI	Samples
TPS72218DBVRG4	ACTIVE	SOT-23	DBV	5	3000	Green (RoHS & no Sb/Br)	CU NIPDAU	Level-1-260C-UNLIM	-40 to 125	PEMI	Samples
TPS72218DBVT	ACTIVE	SOT-23	DBV	5	250	Green (RoHS & no Sb/Br)	CU NIPDAU	Level-1-260C-UNLIM	-40 to 125	PEMI	Samples
TPS72218DBVTG4	ACTIVE	SOT-23	DBV	5	250	Green (RoHS & no Sb/Br)	CU NIPDAU	Level-1-260C-UNLIM	-40 to 125	PEMI	Samples

(1) The marketing status values are defined as follows:
ACTIVE: Product device recommended for new designs.
LIFEBUY: TI has announced that the device will be discontinued, and a lifetime-buy period is in effect.
NRND: Not recommended for new designs. Device is in production to support existing customers, but TI does not recommend using this part in a new design.
PREVIEW: Device has been announced but is not in production. Samples may or may not be available.
OBSOLETE: TI has discontinued the production of the device.

(2) Eco Plan - The planned eco-friendly classification: Pb-Free (RoHS), Pb-Free (RoHS Exempt), or Green (RoHS & no Sb/Br) - please check http://www.ti.com/productcontent for the latest availability information and additional product content details.
TBD: The Pb-Free/Green conversion plan has not been defined.

Pb-Free (RoHS): TI's terms "Lead-Free" or "Pb-Free" mean semiconductor products that are compatible with the current RoHS requirements for all 6 substances, including the requirement that lead not exceed 0.1% by weight in homogeneous materials. Where designed to be soldered at high temperatures, TI Pb-Free products are suitable for use in specified lead-free processes.
Pb-Free (RoHS Exempt): This component has a RoHS exemption for either 1) lead-based flip-chip solder bumps used between the die and package, or 2) lead-based die adhesive used between the die and leadframe. The component is otherwise considered Pb-Free (RoHS compatible) as defined above.
Green (RoHS & no Sb/Br): TI defines "Green" to mean Pb-Free (RoHS compatible), and free of Bromine (Br) and Antimony (Sb) based flame retardants (Br or Sb do not exceed 0.1% by weight in homogeneous material)

(3) MSL, Peak Temp. -- The Moisture Sensitivity Level rating according to the JEDEC industry standard classifications, and peak solder temperature.

(4) Multiple Top-Side Markings will be inside parentheses. Only one Top-Side Marking contained in parentheses and separated by a "~" will appear on a device. If a line is indented then it is a continuation of the previous line and the two combined represent the entire Top-Side Marking for that device.

Important Information and Disclaimer: The information provided on this page represents TI's knowledge and belief as of the date that it is provided. TI bases its knowledge and belief on information provided by third parties, and makes no representation or warranty as to the accuracy of such information. Efforts are underway to better integrate information from third parties. TI has taken and continues to take reasonable steps to provide representative and accurate information but may not have conducted destructive testing or chemical analysis on incoming materials and chemicals. TI and TI suppliers consider certain information to be proprietary, and thus CAS numbers and other limited information may not be available for release.

In no event shall TI's liability arising out of such information exceed the total purchase price of the TI part(s) at issue in this document sold by TI to Customer on an annual basis.

TAPE AND REEL INFORMATION

REEL DIMENSIONS

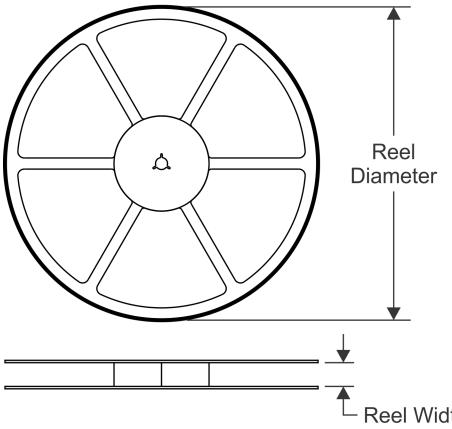

TAPE DIMENSIONS

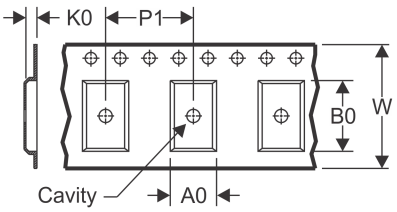

A0	Dimension designed to accommodate the component width
B0	Dimension designed to accommodate the component length
K0	Dimension designed to accommodate the component thickness
W	Overall width of the carrier tape
P1	Pitch between successive cavity centers

QUADRANT ASSIGNMENTS FOR PIN 1 ORIENTATION IN TAPE

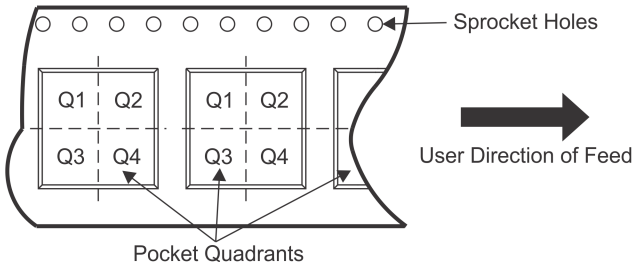

*All dimensions are nominal

Device	Package Type	Package Drawing	Pins	SPQ	Reel Diameter (mm)	Reel Width W1 (mm)	A0 (mm)	B0 (mm)	K0 (mm)	P1 (mm)	W (mm)	Pin1 Quadrant
TPS72201DBVR	SOT-23	DBV	5	3000	178.0	9.0	3.23	3.17	1.37	4.0	8.0	Q3
TPS72201DBVR	SOT-23	DBV	5	3000	179.0	8.4	3.2	3.2	1.4	4.0	8.0	Q3
TPS72201DBVT	SOT-23	DBV	5	250	179.0	8.4	3.2	3.2	1.4	4.0	8.0	Q3
TPS72201DBVT	SOT-23	DBV	5	250	178.0	9.0	3.23	3.17	1.37	4.0	8.0	Q3
TPS72215DBVT	SOT-23	DBV	5	250	178.0	9.0	3.23	3.17	1.37	4.0	8.0	Q3
TPS72216DBVT	SOT-23	DBV	5	250	179.0	8.4	3.2	3.2	1.4	4.0	8.0	Q3
TPS72218DBVR	SOT-23	DBV	5	3000	178.0	9.0	3.23	3.17	1.37	4.0	8.0	Q3
TPS72218DBVT	SOT-23	DBV	5	250	178.0	9.0	3.3	3.2	1.4	4.0	8.0	Q3

TAPE AND REEL BOX DIMENSIONS

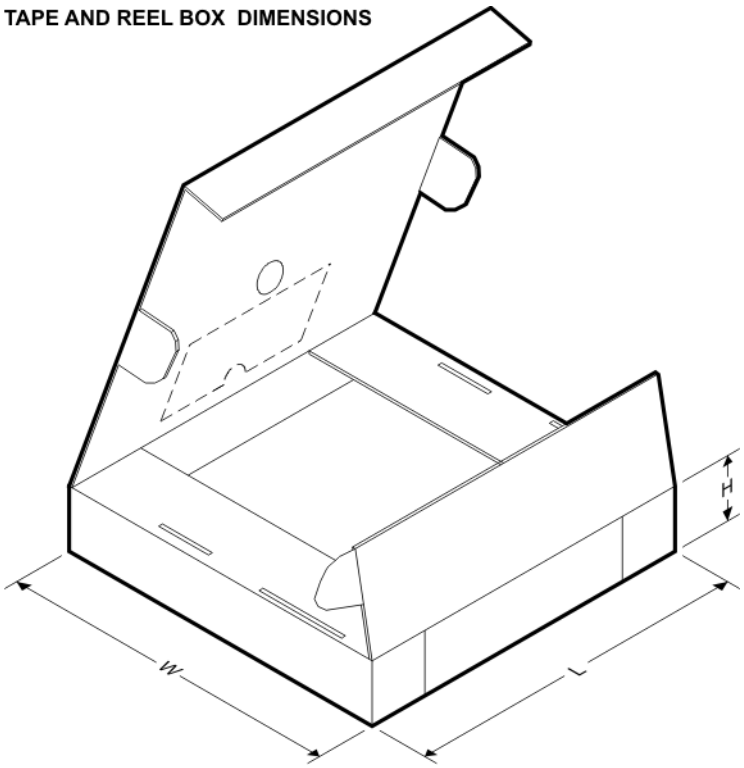

*All dimensions are nominal

Device	Package Type	Package Drawing	Pins	SPQ	Length (mm)	Width (mm)	Height (mm)
TPS72201DBVR	SOT-23	DBV	5	3000	180.0	180.0	18.0
TPS72201DBVR	SOT-23	DBV	5	3000	203.0	203.0	35.0
TPS72201DBVT	SOT-23	DBV	5	250	203.0	203.0	35.0
TPS72201DBVT	SOT-23	DBV	5	250	180.0	180.0	18.0
TPS72215DBVT	SOT-23	DBV	5	250	180.0	180.0	18.0
TPS72216DBVT	SOT-23	DBV	5	250	203.0	203.0	35.0
TPS72218DBVR	SOT-23	DBV	5	3000	180.0	180.0	18.0
TPS72218DBVT	SOT-23	DBV	5	250	180.0	180.0	18.0

DBV (R–PDSO–G5) PLASTIC SMALL–OUTLINE PACKAGE

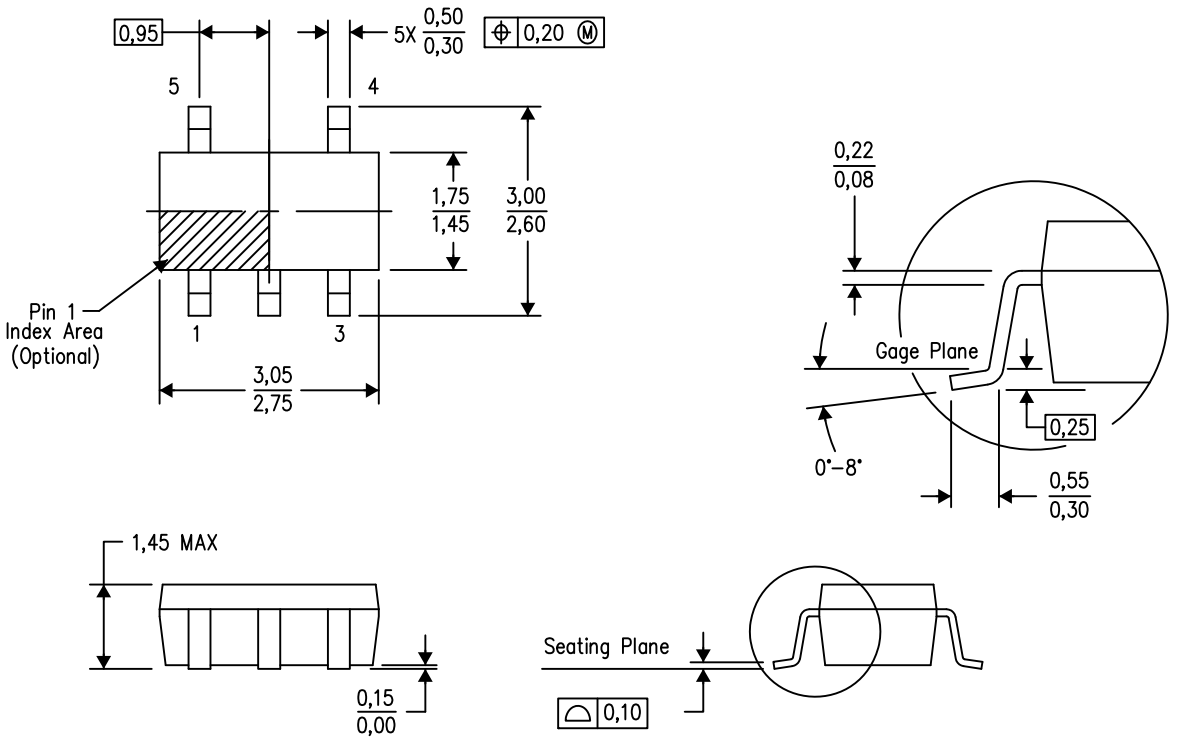

4073253–4/L 08/2013

NOTES:
A. All linear dimensions are in millimeters.
B. This drawing is subject to change without notice.
C. Body dimensions do not include mold flash or protrusion. Mold flash and protrusion shall not exceed 0.15 per side.
D. Falls within JEDEC MO–178 Variation AA.

DBV (R–PDSO–G5) PLASTIC SMALL OUTLINE

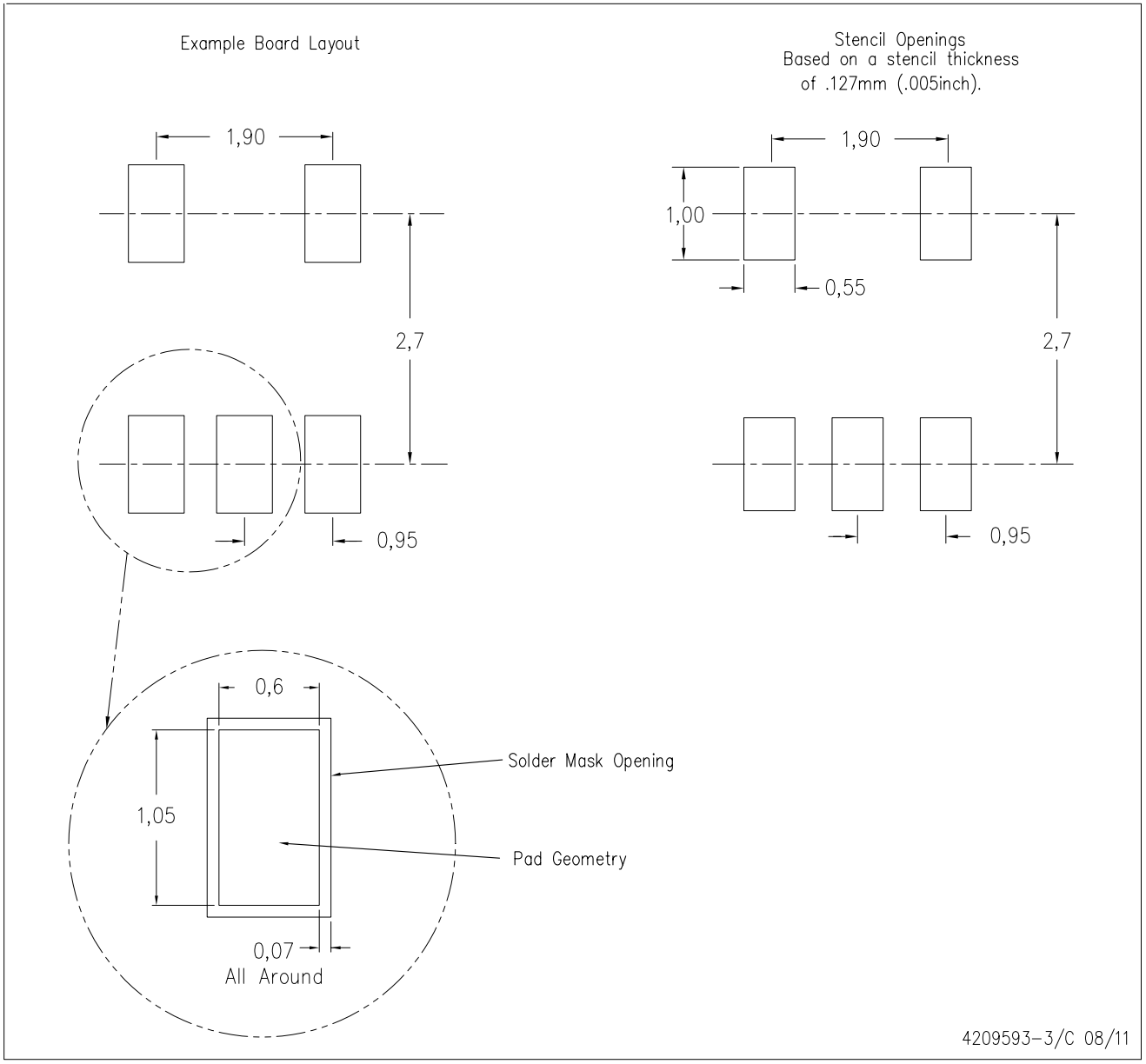

NOTES:
A. All linear dimensions are in millimeters.
B. This drawing is subject to change without notice.
C. Customers should place a note on the circuit board fabrication drawing not to alter the center solder mask defined pad.
D. Publication IPC–7351 is recommended for alternate designs.
E. Laser cutting apertures with trapezoidal walls and also rounding corners will offer better paste release. Customers should contact their board assembly site for stencil design recommendations. Example stencil design based on a 50% volumetric metal load solder paste. Refer to IPC–7525 for other stencil recommendations.

IMPORTANT NOTICE

Texas Instruments Incorporated and its subsidiaries (TI) reserve the right to make corrections, enhancements, improvements and other changes to its semiconductor products and services per JESD46, latest issue, and to discontinue any product or service per JESD48, latest issue. Buyers should obtain the latest relevant information before placing orders and should verify that such information is current and complete. All semiconductor products (also referred to herein as “components”) are sold subject to TI’s terms and conditions of sale supplied at the time of order acknowledgment.

TI warrants performance of its components to the specifications applicable at the time of sale, in accordance with the warranty in TI’s terms and conditions of sale of semiconductor products. Testing and other quality control techniques are used to the extent TI deems necessary to support this warranty. Except where mandated by applicable law, testing of all parameters of each component is not necessarily performed.

TI assumes no liability for applications assistance or the design of Buyers’ products. Buyers are responsible for their products and applications using TI components. To minimize the risks associated with Buyers’ products and applications, Buyers should provide adequate design and operating safeguards.

TI does not warrant or represent that any license, either express or implied, is granted under any patent right, copyright, mask work right, or other intellectual property right relating to any combination, machine, or process in which TI components or services are used. Information published by TI regarding third-party products or services does not constitute a license to use such products or services or a warranty or endorsement thereof. Use of such information may require a license from a third party under the patents or other intellectual property of the third party, or a license from TI under the patents or other intellectual property of TI.

Reproduction of significant portions of TI information in TI data books or data sheets is permissible only if reproduction is without alteration and is accompanied by all associated warranties, conditions, limitations, and notices. TI is not responsible or liable for such altered documentation. Information of third parties may be subject to additional restrictions.

Resale of TI components or services with statements different from or beyond the parameters stated by TI for that component or service voids all express and any implied warranties for the associated TI component or service and is an unfair and deceptive business practice. TI is not responsible or liable for any such statements.

Buyer acknowledges and agrees that it is solely responsible for compliance with all legal, regulatory and safety-related requirements concerning its products, and any use of TI components in its applications, notwithstanding any applications-related information or support that may be provided by TI. Buyer represents and agrees that it has all the necessary expertise to create and implement safeguards which anticipate dangerous consequences of failures, monitor failures and their consequences, lessen the likelihood of failures that might cause harm and take appropriate remedial actions. Buyer will fully indemnify TI and its representatives against any damages arising out of the use of any TI components in safety-critical applications.

In some cases, TI components may be promoted specifically to facilitate safety-related applications. With such components, TI’s goal is to help enable customers to design and create their own end-product solutions that meet applicable functional safety standards and requirements. Nonetheless, such components are subject to these terms.

No TI components are authorized for use in FDA Class III (or similar life-critical medical equipment) unless authorized officers of the parties have executed a special agreement specifically governing such use.

Only those TI components which TI has specifically designated as military grade or “enhanced plastic” are designed and intended for use in military/aerospace applications or environments. Buyer acknowledges and agrees that any military or aerospace use of TI components which have ***not*** been so designated is solely at the Buyer's risk, and that Buyer is solely responsible for compliance with all legal and regulatory requirements in connection with such use.

TI has specifically designated certain components as meeting ISO/TS16949 requirements, mainly for automotive use. In any case of use of non-designated products, TI will not be responsible for any failure to meet ISO/TS16949.

Products		**Applications**	
Audio	www.ti.com/audio	Automotive and Transportation	www.ti.com/automotive
Amplifiers	amplifier.ti.com	Communications and Telecom	www.ti.com/communications
Data Converters	dataconverter.ti.com	Computers and Peripherals	www.ti.com/computers
DLP® Products	www.dlp.com	Consumer Electronics	www.ti.com/consumer-apps
DSP	dsp.ti.com	Energy and Lighting	www.ti.com/energy
Clocks and Timers	www.ti.com/clocks	Industrial	www.ti.com/industrial
Interface	interface.ti.com	Medical	www.ti.com/medical
Logic	logic.ti.com	Security	www.ti.com/security
Power Mgmt	power.ti.com	Space, Avionics and Defense	www.ti.com/space-avionics-defense
Microcontrollers	microcontroller.ti.com	Video and Imaging	www.ti.com/video
RFID	www.ti-rfid.com		
OMAP Applications Processors	www.ti.com/omap	**TI E2E Community**	e2e.ti.com
Wireless Connectivity	www.ti.com/wirelessconnectivity		

Mailing Address: Texas Instruments, Post Office Box 655303, Dallas, Texas 75265
Copyright © 2013, Texas Instruments Incorporated