TPS68000EVM-166

This user's guide describes the characteristics, operation, and use of the TPS68000EVM-166 evaluation module (EVM). This EVM is designed to help the user easily evaluate and test the operation and functionality of the TPS68000. This document includes setup instructions for the hardware, a schematic diagram, a bill of materials , and PCB layout drawings for the evaluation module.

Contents

1 Introduction 1
2 Setup and Results 3
3 Board Layout 6
4 Schematic and Bill of Materials 9

List of Figures

1 Output Voltage and VSEN Test Point for Lamps 1,2,3, and 4 4
2 Lamp 1 VSEN Test Point Versus Lamp 1 Voltage 4
3 Output Current and CSEN Test Point for Lamps 1,2,3, and 4 5
4 Lamp 1 CSEN Test Point and Lamp 1 Current 5
5 Turn ON Into 360-mm Lamp, VSEN Test Point Lamps 1, 2, 3, and 4 6
6 External Burst Dimming, CSEN Test Point Lamps 1, 2, 3, and 4 6
7 Assembly Layer 7
8 Top Layer Routing 8
9 Bottom Layer Routing 9
10 TPS68000EVM-166 Schematic, Sheet 1 10
11 TPS68000EVM-166 Schematic, Sheet 2 11
12 TPS68000EVM-166 Schematic, Sheet 3 12
13 TPS68000EVM-166 Schematic, Sheet 4 13

List of Tables

1 Performance Specification Summary for Each Section 2
2 I/O for All Sections 3
3 I/O for Individual Sections 3
4 Bill of Materials 14

1 Introduction

The Texas Instrument TPS68000EVM-166 evaluation module (EVM) helps designers evaluate the operation and performance of the TPS68000 cold cathode fluorescent lamps (CCFL) controller. The TPS68000EVM-166 EVM is a fully functional DC/AC inverter module used to drive a single CCFL lamp. The unit consists of four controllers each with its own set of switch FETs and transformer. U1 is the master unit; U2, U3, and U4 are slaves.

This EVM operates from an input supply of 12 V to 20 V and generates up to 700 Vrms at 5 mArms. Lamp current is fixed at 6 mArms by resistor value, and output voltage is determined by the CCFL. This output is typical of a 360-mm length CCFL, reference JKL Components BF3360.

Note: All CCFL inverters have high AC voltages present on outputs, and therefore care should be taken to avoid shock hazards and equipment damage.

1.1 Related Documentation from Texas Instruments

TPS68000, Highly Efficient Phase Shift Full Bridge CCFL Controller data sheet (SLVS524)

1.2 Background

The TPS68000EVM-166 uses the TPS68000 version. Although the TPS68000 is capable of operating from an 8-V to 30-V input range, this EVM is only designed to operate from an 12-V to 20-V input range.

Additional lower input voltage configurations are also possible. Output voltage and current are a function of transformer and circuit design.

1.3 Performance Specification

Table 1 provides a summary of the TPS68000EVM-166 performance specifications. All specifications are given for an ambient temperature of 25°C.

Table 1. Performance Specification Summary for Each Section

Specification	Min	Typ	Max	Unit
Input voltage	12	15	20	V
Input current		1300		mA
Output current		6		mArms
Output voltage		750		Vrms
Efficiency		80%		
Strike voltage		1500		Vrms
Open lamp delay		1.5		S
Operating frequency		57		kHz
Burst dimming frequency		100		Hz
Burst dimming range	0		2	V
Analog dimming range	0		3.3	V

1.4 Modifications

Each section has the options to connect two lamps to the output through ballast capacitors. Returns for the two lamps are to be connected together, then back to the single-lamp return point. The resistor in the return leg for CSEN needs to be adjusted in value to support two lamps, typically a 50% reduction in value. The PCB has positions for the ballast capacitors; recommended value is 33 pF to 15 pF at 3 KV.

1.4.1 External Burst Dimming Adjustment

The EVM can be configured for external burst dimming using the input at J4 (BC). A digital signal can be applied at this input to PWM-dim all the lamps. A 0-V signal turns the lamps off, and voltage greater than 1.4 V turns the lamps on. A burst dimming frequency of 100 Hz to 200 Hz is recommended.

1.4.2 Analog Dimming Adjustment

The Analog Dimming Adjustment can change the lamp current set point by adjusting the reference voltage used by the current regulator. The EVM can be configured for analog dimming using the J3 (ABR) connector. With no connection to J3, the reference voltage is an internal 3.3 V. This value along with the return sense resistor produces a 6-mA lamp current.

This voltage should not be increased above 3.3 V.

Lamp current can be reduced by reducing the voltage at J3. Consult the lamp manufacturer's recommendation for minimum current. Typically, this value can only be reduced by 50% of nominal value.

2 Setup and Results

This section describes how to properly use the TPS68000EVM-166.

2.1 2.1 Input / Output Connector and Header Descriptions

Table 2. I/O for All Sections

Signal for All Sections		Connector
Vin	– Power supply positive input	J1
GND	– Power supply return input	J2
EN	– Enable input, OFF and ON setting, no jumper is ON	JP1
ABR	– Analog burst dimming voltage, pulled up to 3.3 V through R4	J3
BC	– Burst dimming input signal	J4
SYNC	– Sync output from U1	J5
FAULT	– Fault output bus signal, open-collector signal	J6

Table 3. I/O for Individual Sections

Signal Name	Section			
	U1	U2	U3	U4
High-voltage AC output to lamp	TP1	TP3	TP5	TP7
High-voltage lamp return from lamp	TP2	TP4	TP6	TP8
Overcurrent protection test point (OCP), transformer primary current	TP9	TP13	TP17	TP21
Current sense test point (Csen), lamp return current sense resistor	TP10	TP14	TP18	TP22
Voltage sense test point (Vsen), output voltage divider sample voltage	TP11	TP15	TP19	TP23
Ground test point for OCP, Csen and Vsen	TP12	TP16	TP20	TP24
(Optional) HV AC output for dual lamp 1	TP25	TP27	TP29	TP31
(Optional) HV AC output for dual lamp 2	TP26	TP28	TP30	TP32

2.2 Setup

CAUTION

High AC voltage is present at output terminals when input voltage is applied. All connections should be made with input supply off.

Do not place the EVM or the lamp on a conductive surface. Do not run output leads across the EVM or input voltage leads.

The power supply input is J1/J2. This powers all sections.

The minimum setup requires an input power supply and load. The input supply range is 12 V to 20 V. This EVM is designed to operate with lamp lengths between 250 mm and 360 mm.

JP1 EN can be used to turn the unit on or off.

2.3 Output Voltage and VSEN Test Point

Output voltage can be monitored at the low-voltage VSEN test point without special equipment. VSEN is a divided-down sample of the output voltage used by the TPS68000 for voltage monitoring and regulation; divide ratio is 1:1000. Each section has a VSEN test point.

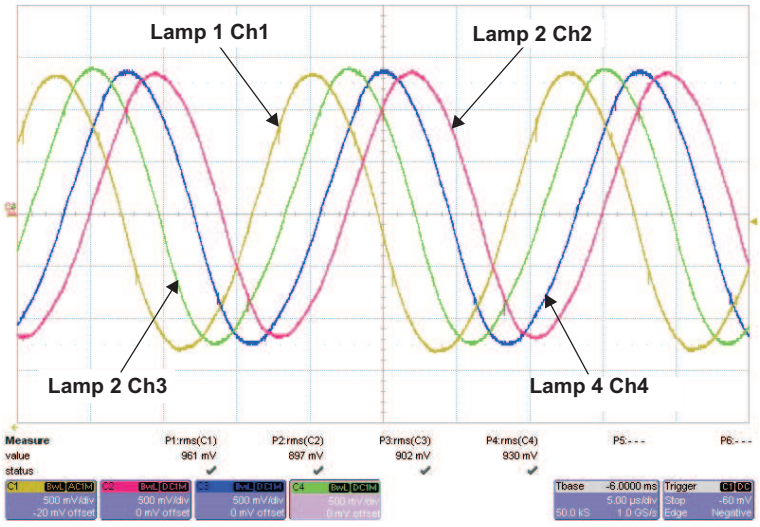

Figure 1. Output Voltage and VSEN Test Point for Lamps 1,2,3, and 4

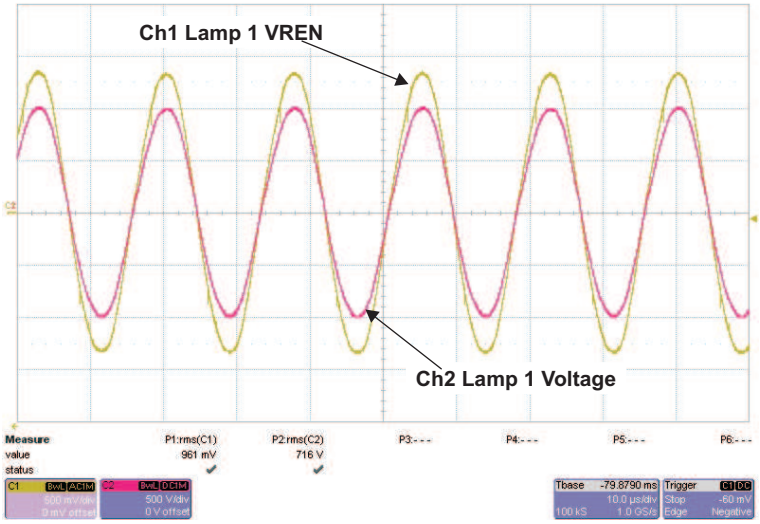

Figure 2. Lamp 1 VSEN Test Point Versus Lamp 1 Voltage

2.4 Output Current and CSEN Test Point

Output current can be monitored at the CSEN test point without special equipment. CSEN is an input to the TPS68000 for regulating output current. Divide ratio for this test point is 392 mV to 1 mA. During normal operation, the CSEN test point is regulating at 2.4 Vrms. Figure 3 shows lamp current measured using an external current probe versus the CSEN test point.

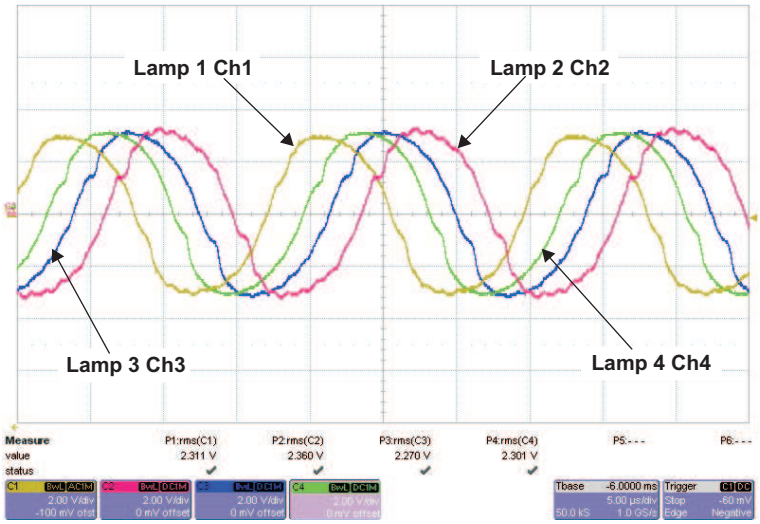

Figure 3. Output Current and CSEN Test Point for Lamps 1,2,3, and 4

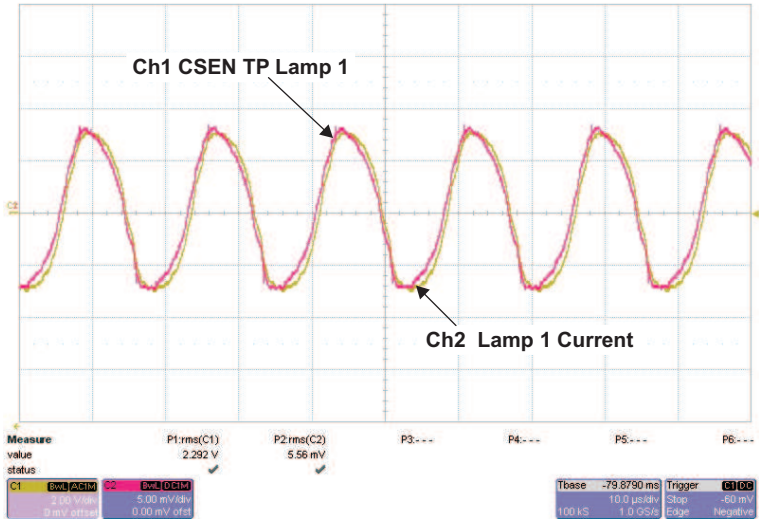

Figure 4. Lamp 1 CSEN Test Point and Lamp 1 Current

2.5 Power Up

During power up, the lamp strikes and then goes into a current regulation mode. During lamp strike, the lamp has high resistance because no gas is being ionized. The voltage required to strike the lamp is typically twice the voltage required for normal operation. After the lamp strikes, current flows through the lamp, and the TPS68000 transitions to a current regulation mode.

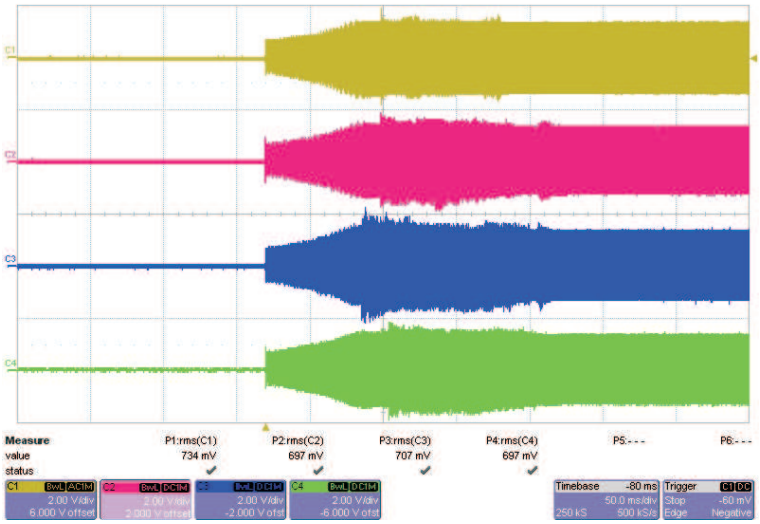

Figure 5. Turn ON Into 360-mm Lamp, VSEN Test Point Lamps 1, 2, 3, and 4

2.6 BC External Burst Dimming

External burst dimming can be used with J4, the BC input. If an edge transition is detected, the unit enters the external dimming mode and follows the signal BC pin. A low level turns the lamps off, whereas a high level turns the lamps on.

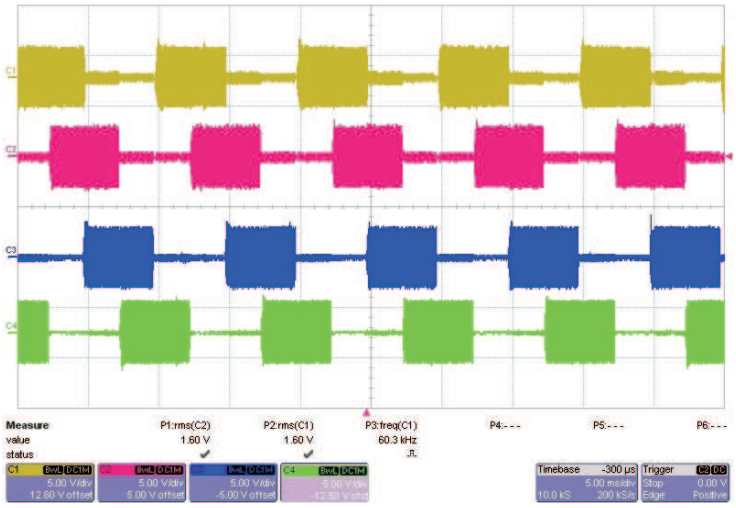

Figure 6. External Burst Dimming, CSEN Test Point Lamps 1, 2, 3, and 4

3 Board Layout

This section provides the TPS68000EVM-166 board layout and illustrations.

3.1 Layout

Figure 7 through Figure 9 show the board layout for the TPS68000EVM-166 PCB.

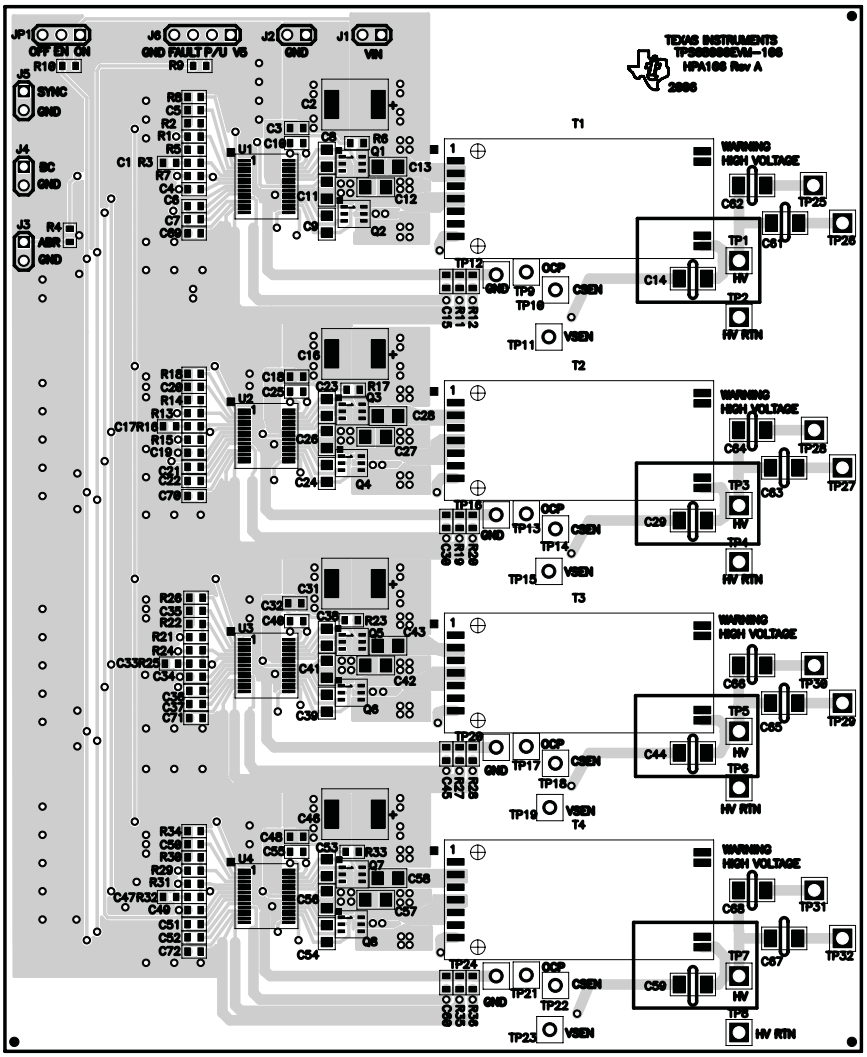

Figure 7. Assembly Layer

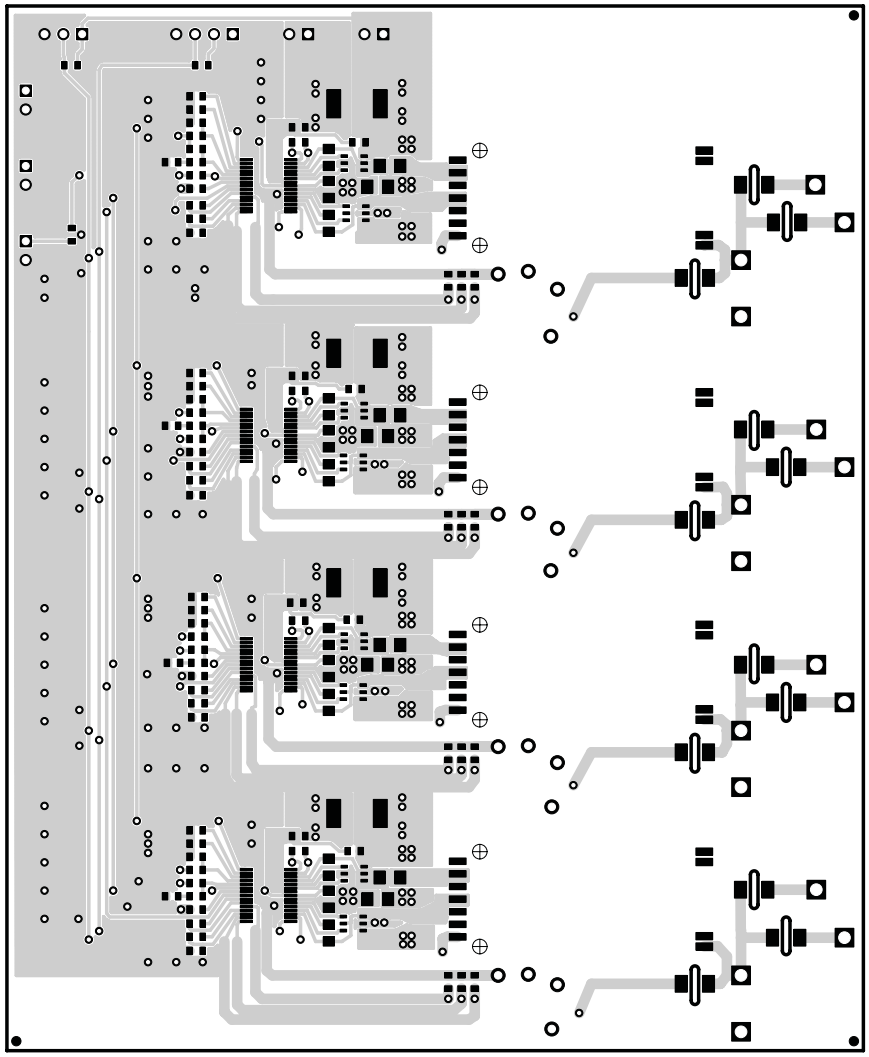

Figure 8. Top Layer Routing

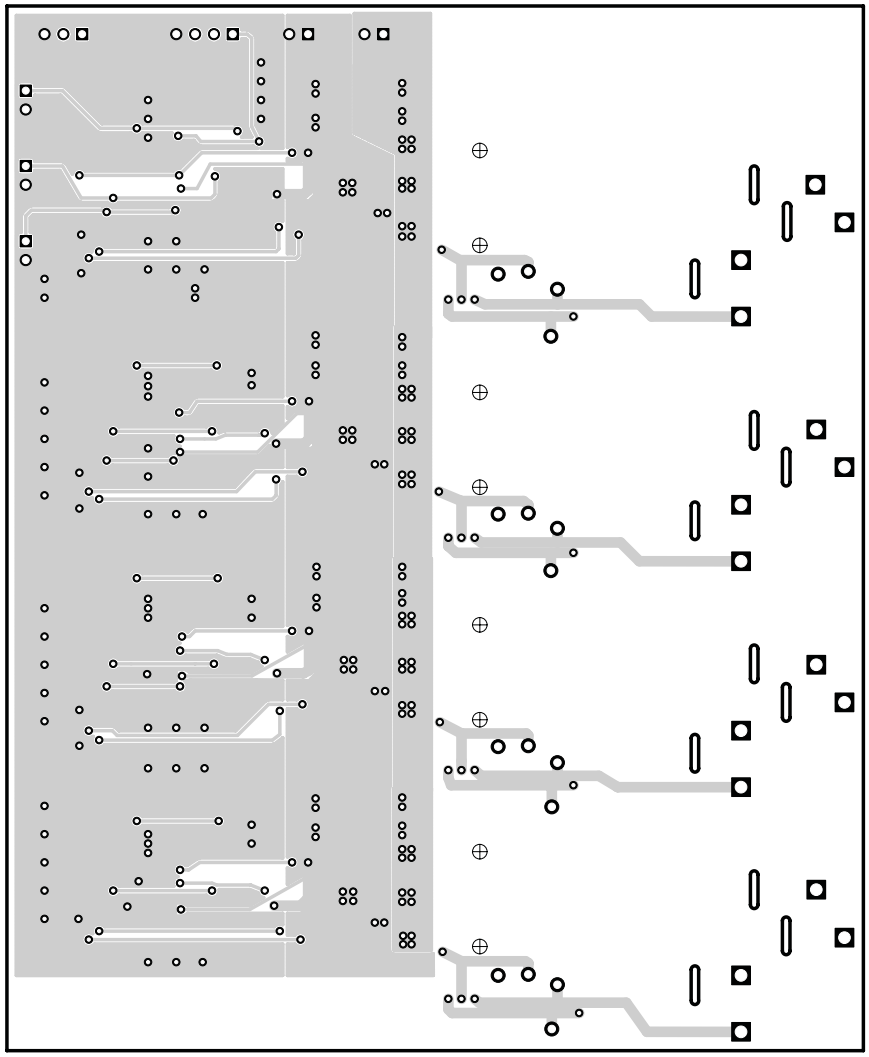

Figure 9. Bottom Layer Routing

4 Schematic and Bill of Materials

This section provides the TPS68000EVM-166 schematic and bill of materials.

4.1 Schematic

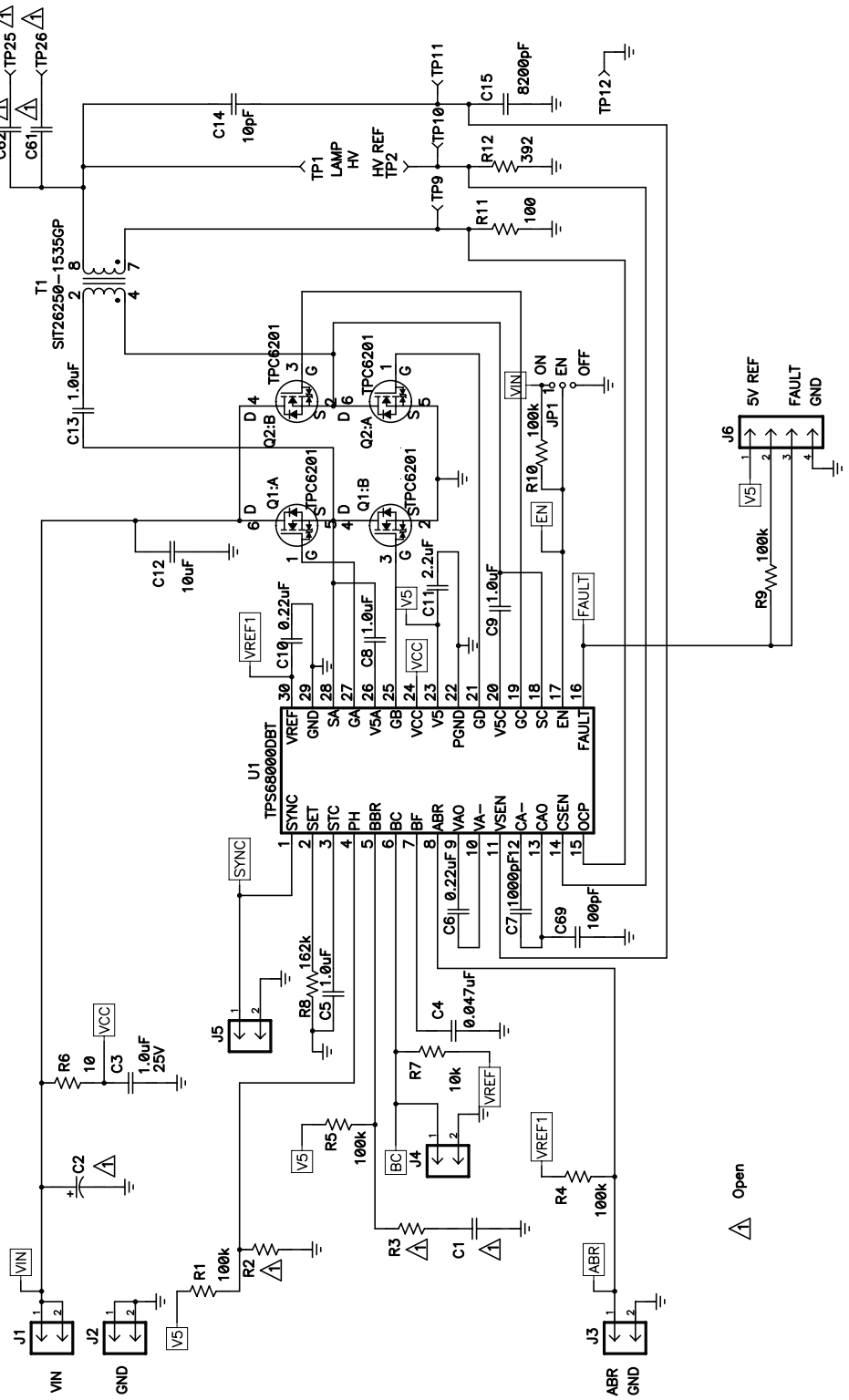

Figure 10. TPS68000EVM-166 Schematic, Sheet 1

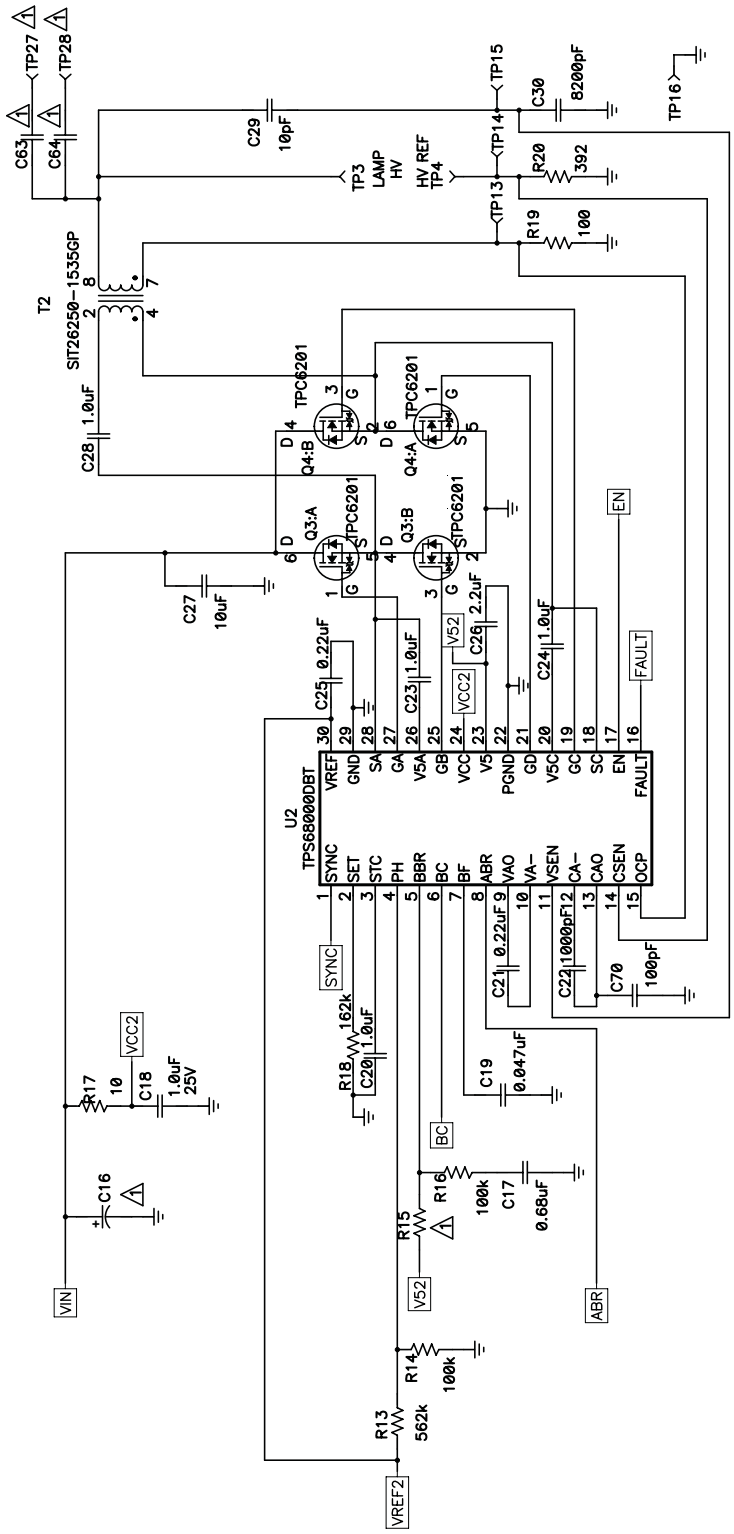

Figure 11. TPS68000EVM-166 Schematic, Sheet 2

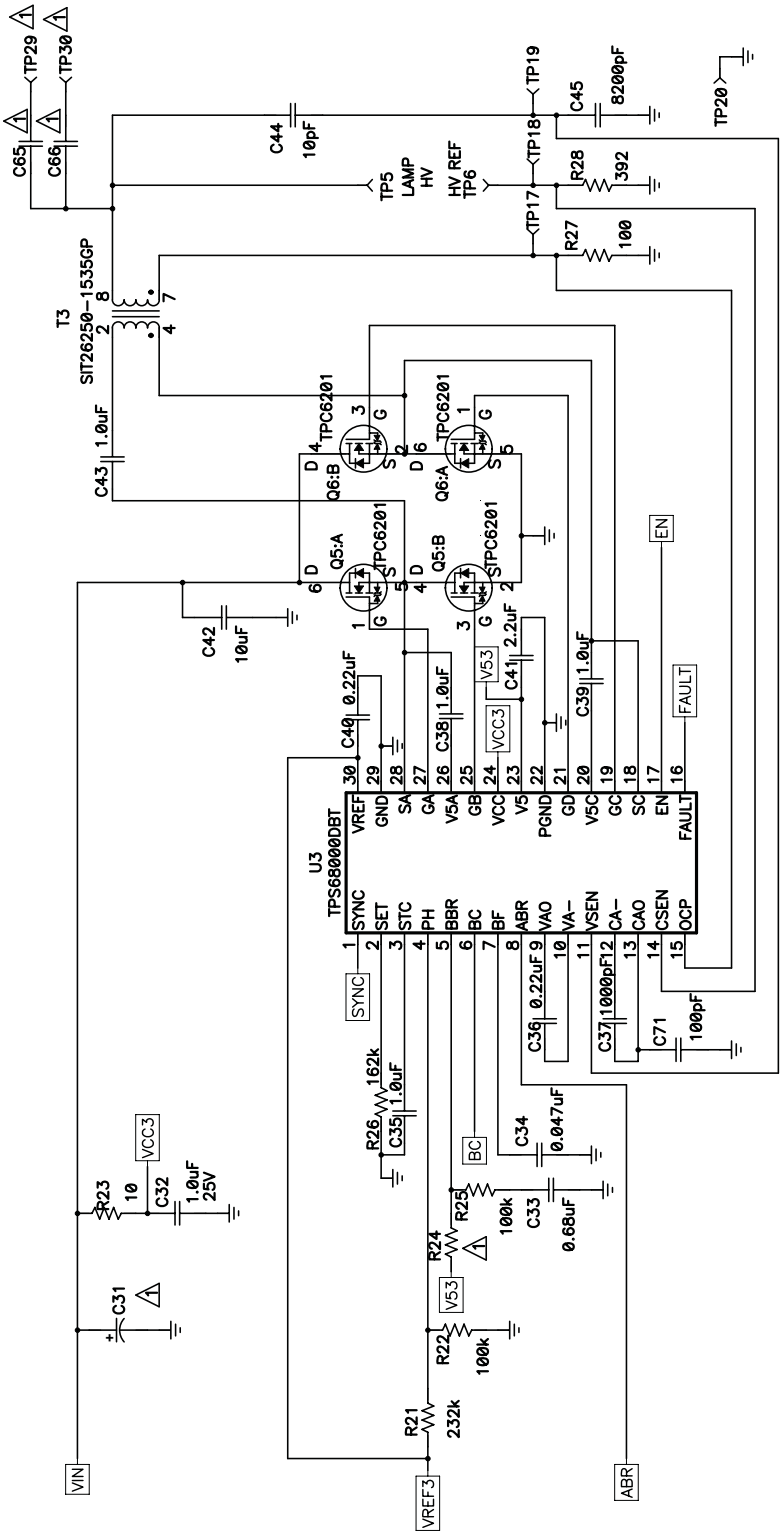

Figure 12. TPS68000EVM-166 Schematic, Sheet 3

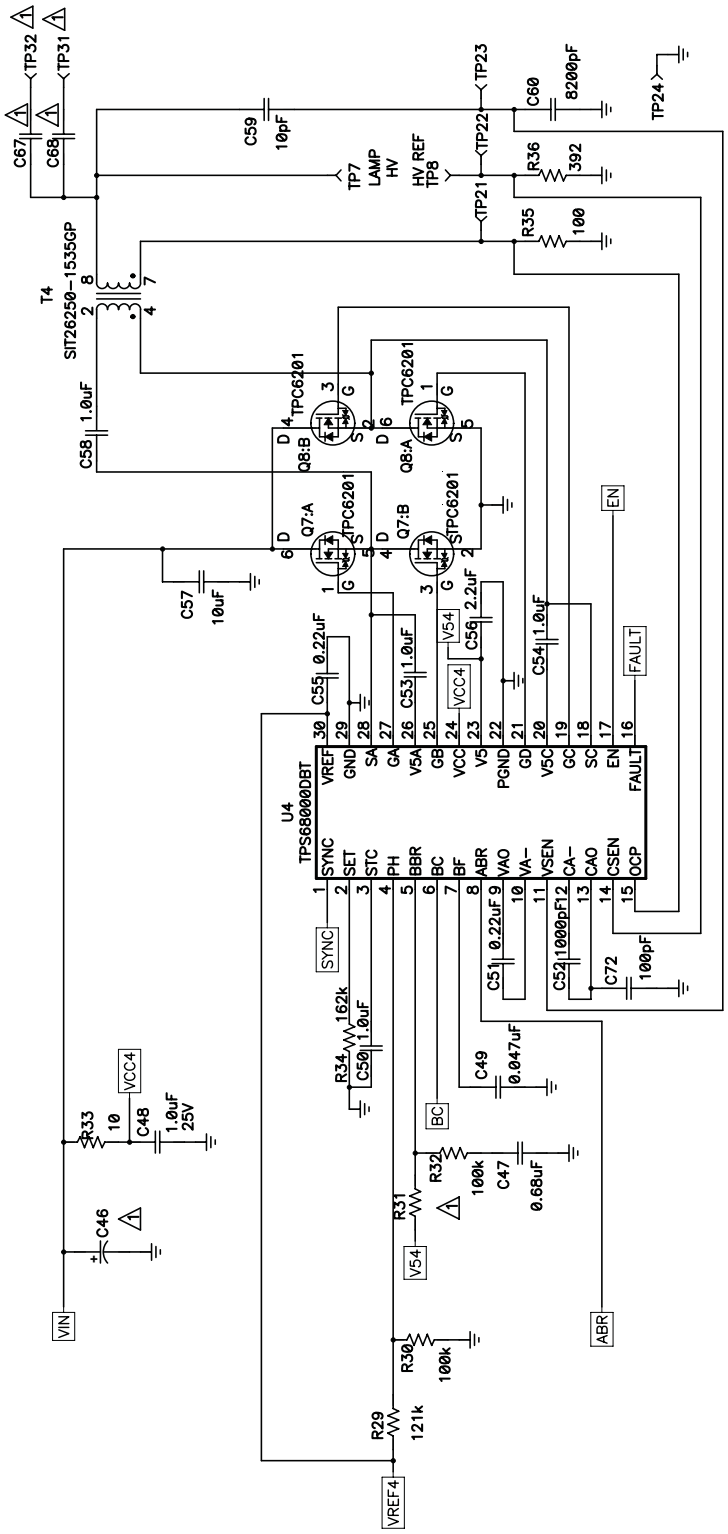

Figure 13. TPS68000EVM-166 Schematic, Sheet 4

4.2 Bill of Materials

Table 4. Bill of Materials

COUNT	Ref Des	Value	Description	Size	Part Number	MFR
0	C1	Open	Capacitor, Ceramic	0603		
4	C11, C26, C41, C56	2.2µF	Capacitor, Ceramic, 25V, X5R, 10%	0805	C2012X5R1E225K	TDK
4	C12, C27, C42, C57	10µF	Capacitor, Ceramic, 25V, X5R, 10%	1206	C3216X5R1E106K	TDK
4	C13, C28, C43, C58	1.0µF	Capacitor, Ceramic, 50V, X7R, 10%	1206	C3216X7R1H105K	TDK
4	C14, C29, C44, C59	10pF	Capacitor, 3kV, C0G, ±1pF	0.110 × 0.110	C4520C0G3F100F	TDK
4	C15, C30, C45, C60	8200pF	Capacitor, Ceramic, 50V, X7R, 10%	0603	GRM188R71H822KA01	Murata
3	C17, C33, C47	0.68µF	Capacitor, Ceramic, 10V, X5R, 10%	0603	C1608X5R1A684KC	TDK
0	C2, C16, C31, C46	Open	Capacitor, Tantalum	7361		
8	C3, C5, C18, C20, C32, C35, C48, C50	1.0µF	Capacitor, Ceramic, 25V, X5R, 10%	0603	C1608X5R1E105K	TDK
4	C4, C19, C34, C49	0.047µF	Capacitor, Ceramic, 50V, X5R, 10%	0603	C1608X5R1H473KB	TDK
8	C6, C10, C21, C25, C36, C40, C51, C55	0.22µF	Capacitor, Ceramic, 50V, X5R, 10%	0603	C1608X5R1H223KB	TDK
0	C61–C68	Open	Capacitor	0.110 × 0.110		
4	C69–C72	100pF	Capacitor, Ceramic, 50V, C0G, 5%	0603	C1608C0G1H101JB	TDK
4	C7, C22, C37, C52	1000pF	Capacitor, Ceramic, 50V, X5R, 10%	0603	C1608X5R1H102KB	TDK
8	C8, C9, C23, C24, C38, C39, C53, C54	1.0µF	Capacitor, Ceramic, 25V, X7R, 10%	0805	C2012X7R1E105K	TDK
5	J1–J5		Header, 2 pin, 100mil spacing, (36-pin strip)	0.100 × 2	PTC36SAAN	Sullins
1	J6		Header, 4 pin, 100mil spacing, (36-pin strip)	0.100 × 4	PTC36SAAN	Sullins
1	JP1		Header, 3 pin, 100mil spacing, (36-pin strip)	0.100 × 3	PTC36SAAN	Sullins
8	Q1–Q8		MOSFET, N-Ch 30V, 2.5A	2-3T1B	TPC6201	Toshiba
11	R1, R4, R5, R9, R10, R14, R16, R22, R25, R30, R32	100k	Resistor, Chip, 1/16W, 1%	0603	Std	Std
4	R11, R19, R27, R35	100	Resistor, Chip, 1/16W, 1%	0603	Std	Std
4	R12, R20, R28, R36	392	Resistor, Chip, 1/16W, 1%	0603	Std	Std
1	R13	562k	Resistor, Chip, 1/16W, 1%	0603	Std	Std
0	R2, R3, R15, R24, R31	Open	Resistor, Chip, 1/16W, 1%	0603	Std	Std
1	R21	232k	Resistor, Chip, 1/16W, 1%	0603	Std	Std
1	R29	121k	Resistor, Chip, 1/16W, 1%	0603	Std	Std
4	R6, R17, R23, R33	10	Resistor, Chip, 1/16W, 1%	0603	Std	Std
1	R7	10k	Resistor, Chip, 1/16W, 1%	0603	Std	Std
4	R8, R18, R26, R34	162k	Resistor, Chip, 1/16W, 1%	0603	Std	Std
4	T1–T4		Transformer, EFDL15 Inverter	0.525 × 0.420	SIT26250-1535GP or G064200LF	Taipei Multipower or GCI Technologies
4	TP1, TP3, TP5, TP7		Test Point, Red, Thru Hole Compact Style	0.125 × 0.125	5005	Keystone

Table 4. Bill of Materials (continued)

COUNT	Ref Des	Value	Description	Size	Part Number	MFR
4	TP12, TP16, TP20, TP24		Test Point, Black, Thru Hole Color Keyed	0.100 × 0.100	5001	Keystone
4	TP2, TP4, TP6, TP8		Test Point, Black, Thru Hole Compact Style	0.125 × 0.125	5006	Keystone
0	TP25–TP32		Test Point	0.125 × 0.125		
12	TP9–TP11, TP13–TP15, TP17–TP19, TP21–TP23		Test Point, Red, Thru Hole Color Keyed	0.100 × 0.100	5000	Keystone
4	U1–U4		IC, High Efficient Phase Shift Full Bridge CCFL Controller	TSSOP-30	TPS68000DBT	TI
1	–		PCB, 5.55 In × 4.5 In × 0.062 In		HPA166	Any
1	–		Shunt, 100mil, Black	0.100	929950-00	3M
4	–		Bumpon, Transparent	0.44 × 0.2	SJ5303	3M

EVALUATION BOARD/KIT IMPORTANT NOTICE

Texas Instruments (TI) provides the enclosed product(s) under the following conditions:

This evaluation board/kit is intended for use for **ENGINEERING DEVELOPMENT, DEMONSTRATION, OR EVALUATION PURPOSES ONLY** and is not considered by TI to be a finished end-product fit for general consumer use. Persons handling the product(s) must have electronics training and observe good engineering practice standards. As such, the goods being provided are not intended to be complete in terms of required design-, marketing-, and/or manufacturing-related protective considerations, including product safety and environmental measures typically found in end products that incorporate such semiconductor components or circuit boards. This evaluation board/kit does not fall within the scope of the European Union directives regarding electromagnetic compatibility, restricted substances (RoHS), recycling (WEEE), FCC, CE or UL, and therefore may not meet the technical requirements of these directives or other related directives.

Should this evaluation board/kit not meet the specifications indicated in the User's Guide, the board/kit may be returned within 30 days from the date of delivery for a full refund. THE FOREGOING WARRANTY IS THE EXCLUSIVE WARRANTY MADE BY SELLER TO BUYER AND IS IN LIEU OF ALL OTHER WARRANTIES, EXPRESSED, IMPLIED, OR STATUTORY, INCLUDING ANY WARRANTY OF MERCHANTABILITY OR FITNESS FOR ANY PARTICULAR PURPOSE.

The user assumes all responsibility and liability for proper and safe handling of the goods. Further, the user indemnifies TI from all claims arising from the handling or use of the goods. Due to the open construction of the product, it is the user's responsibility to take any and all appropriate precautions with regard to electrostatic discharge.

EXCEPT TO THE EXTENT OF THE INDEMNITY SET FORTH ABOVE, NEITHER PARTY SHALL BE LIABLE TO THE OTHER FOR ANY INDIRECT, SPECIAL, INCIDENTAL, OR CONSEQUENTIAL DAMAGES.

TI currently deals with a variety of customers for products, and therefore our arrangement with the user **is not exclusive.**

TI assumes **no liability for applications assistance, customer product design, software performance, or infringement of patents or services described herein.**

Please read the User's Guide and, specifically, the Warnings and Restrictions notice in the User's Guide prior to handling the product. This notice contains important safety information about temperatures and voltages. For additional information on TI's environmental and/or safety programs, please contact the TI application engineer or visit www.ti.com/esh.

No license is granted under any patent right or other intellectual property right of TI covering or relating to any machine, process, or combination in which such TI products or services might be or are used.

FCC Warning

This evaluation board/kit is intended for use for **ENGINEERING DEVELOPMENT, DEMONSTRATION, OR EVALUATION PURPOSES ONLY** and is not considered by TI to be a finished end-product fit for general consumer use. It generates, uses, and can radiate radio frequency energy and has not been tested for compliance with the limits of computing devices pursuant to part 15 of FCC rules, which are designed to provide reasonable protection against radio frequency interference. Operation of this equipment in other environments may cause interference with radio communications, in which case the user at his own expense will be required to take whatever measures may be required to correct this interference.

EVM WARNINGS AND RESTRICTIONS

It is important to operate this EVM within the input voltage range of 12 V to 20 V and the output voltage range of 500 Vrms to 1500 Vrms.

Exceeding the specified input range may cause unexpected operation and/or irreversible damage to the EVM. If there are questions concerning the input range, please contact a TI field representative prior to connecting the input power.

Applying loads outside of the specified output range may result in unintended operation and/or possible permanent damage to the EVM. Please consult the EVM User's Guide prior to connecting any load to the EVM output. If there is uncertainty as to the load specification, please contact a TI field representative.

During normal operation, some circuit components may have case temperatures greater than 60°C. The EVM is designed to operate properly with certain components above 60°C as long as the input and output ranges are maintained. These components include but are not limited to linear regulators, switching transistors, pass transistors, and current sense resistors. These types of devices can be identified using the EVM schematic located in the EVM User's Guide. When placing measurement probes near these devices during operation, please be aware that these devices may be very warm to the touch.

Mailing Address: Texas Instruments, Post Office Box 655303, Dallas, Texas 75265
Copyright © 2007, Texas Instruments Incorporated

IMPORTANT NOTICE

Texas Instruments Incorporated and its subsidiaries (TI) reserve the right to make corrections, modifications, enhancements, improvements, and other changes to its products and services at any time and to discontinue any product or service without notice. Customers should obtain the latest relevant information before placing orders and should verify that such information is current and complete. All products are sold subject to TI's terms and conditions of sale supplied at the time of order acknowledgment.

TI warrants performance of its hardware products to the specifications applicable at the time of sale in accordance with TI's standard warranty. Testing and other quality control techniques are used to the extent TI deems necessary to support this warranty. Except where mandated by government requirements, testing of all parameters of each product is not necessarily performed.

TI assumes no liability for applications assistance or customer product design. Customers are responsible for their products and applications using TI components. To minimize the risks associated with customer products and applications, customers should provide adequate design and operating safeguards.

TI does not warrant or represent that any license, either express or implied, is granted under any TI patent right, copyright, mask work right, or other TI intellectual property right relating to any combination, machine, or process in which TI products or services are used. Information published by TI regarding third-party products or services does not constitute a license from TI to use such products or services or a warranty or endorsement thereof. Use of such information may require a license from a third party under the patents or other intellectual property of the third party, or a license from TI under the patents or other intellectual property of TI.

Reproduction of information in TI data books or data sheets is permissible only if reproduction is without alteration and is accompanied by all associated warranties, conditions, limitations, and notices. Reproduction of this information with alteration is an unfair and deceptive business practice. TI is not responsible or liable for such altered documentation.

Resale of TI products or services with statements different from or beyond the parameters stated by TI for that product or service voids all express and any implied warranties for the associated TI product or service and is an unfair and deceptive business practice. TI is not responsible or liable for any such statements.

TI products are not authorized for use in safety-critical applications (such as life support) where a failure of the TI product would reasonably be expected to cause severe personal injury or death, unless officers of the parties have executed an agreement specifically governing such use. Buyers represent that they have all necessary expertise in the safety and regulatory ramifications of their applications, and acknowledge and agree that they are solely responsible for all legal, regulatory and safety-related requirements concerning their products and any use of TI products in such safety-critical applications, notwithstanding any applications-related information or support that may be provided by TI. Further, Buyers must fully indemnify TI and its representatives against any damages arising out of the use of TI products in such safety-critical applications.

TI products are neither designed nor intended for use in military/aerospace applications or environments unless the TI products are specifically designated by TI as military-grade or "enhanced plastic." Only products designated by TI as military-grade meet military specifications. Buyers acknowledge and agree that any such use of TI products which TI has not designated as military-grade is solely at the Buyer's risk, and that they are solely responsible for compliance with all legal and regulatory requirements in connection with such use.

TI products are neither designed nor intended for use in automotive applications or environments unless the specific TI products are designated by TI as compliant with ISO/TS 16949 requirements. Buyers acknowledge and agree that, if they use any non-designated products in automotive applications, TI will not be responsible for any failure to meet such requirements.

Following are URLs where you can obtain information on other Texas Instruments products and application solutions:

Products		**Applications**	
Amplifiers	amplifier.ti.com	Audio	www.ti.com/audio
Data Converters	dataconverter.ti.com	Automotive	www.ti.com/automotive
DSP	dsp.ti.com	Broadband	www.ti.com/broadband
Interface	interface.ti.com	Digital Control	www.ti.com/digitalcontrol
Logic	logic.ti.com	Military	www.ti.com/military
Power Mgmt	power.ti.com	Optical Networking	www.ti.com/opticalnetwork
Microcontrollers	microcontroller.ti.com	Security	www.ti.com/security
RFID	www.ti-rfid.com	Telephony	www.ti.com/telephony
Low Power Wireless	www.ti.com/lpw	Video & Imaging	www.ti.com/video
		Wireless	www.ti.com/wireless

Mailing Address: Texas Instruments, Post Office Box 655303, Dallas, Texas 75265
Copyright © 2007, Texas Instruments Incorporated