4.5-V to 18-V Input Voltage, 3-A/1-A/1-A Output Current Triple Synchronous Step-Down Converter with Dual Adjustable 200mA/100mA LDOs Evaluation Module

This document presents the information required to operate the TPS65262 PMIC as well as the support documentation including schematic, layout, hardware setup and bill of materials.

Contents

1 Background 2
2 Schematic 3
3 Board Layout 4
4 Bench Test Setup Conditions 9
4.1 Headers Description and Jumper Placement 9
5 Power-Up Procedure 10
6 Bill of Materials 12

List of Figures

1 TPS65262 Schematic 3
2 Component Placement (Top Layer) 4
3 Board Layout (Top Layer) 5
4 Board Layout (Second Layer) 6
5 Board Layout (Third Layer) 7
6 Board Layout (Bottom Layer) 8
7 Headers Description and Jumper Placement 9

List of Tables

1 Summary of Performance 2
2 Input/Output Connection 10
3 Jumpers 10
4 Power Sequencing 11
5 Bill of Materials 12

Copyright © 2014, Texas Instruments Incorporated

1 Background

The TPS65262 PMIC is a triple 3A/1A/1A output current, synchronous step-down (buck) converter with an operational range of 4.5 to 18V. The TPS65262 features an automatic power sequence with driving MODE pin to high and configuring EN1/2/3 pins. The TPS65262 integrates dual LDOs with input voltage from 1.3V to 18V and continuous output current 200mA/100mA. The TPS65262 operates in pulse skipping mode (PSM) at light load.

As there are many possible options to set the converters, Table 1 presents the performance specification summary for the EVM.

Table 1. Summary of Performance

Test Conditions	Performance
VIN = 4.5 to 18 V fsw = 600 kHz LVIN1/2=1.3 to 18 V (25°C ambient)	Buck1, 1.2 V, up to 3 A
	Buck2, 1.8 V, up to 1 A
	Buck3, 3.3 V, up to 1 A
	LOUT1, 2.5V, 200mA
	LOUT2, 5.0V, 100mA

The evaluation module is designed to provide access to the features of the TPS65262. Some modifications can be made to this module to test performance at different input and output voltages for bucks and LDOs. Contact TI Field Applications Group for advice on these matters.

Copyright © 2014, Texas Instruments Incorporated

2 Schematic

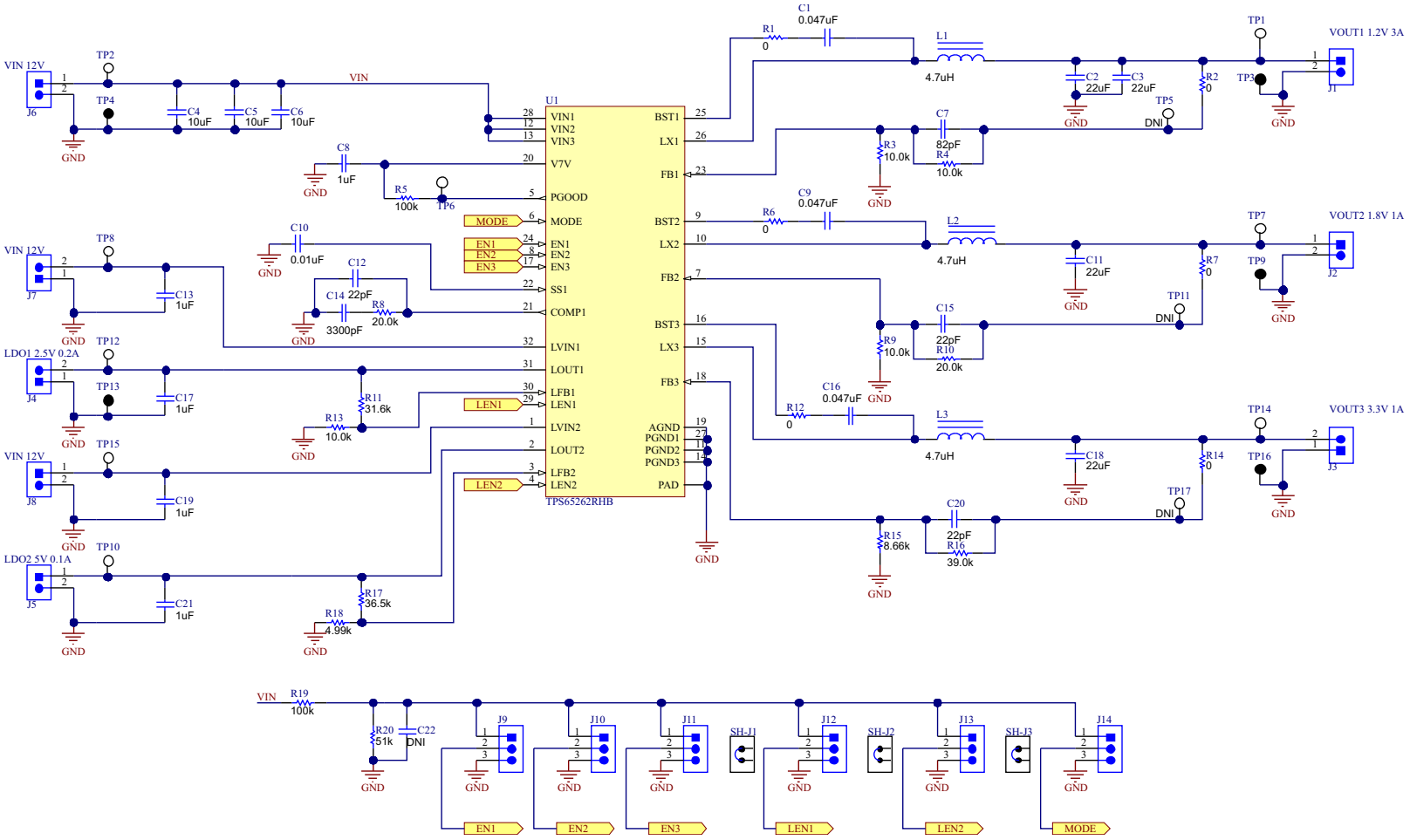

Figure 1. TPS65262 Schematic

Copyright © 2014, Texas Instruments Incorporated

3 Board Layout

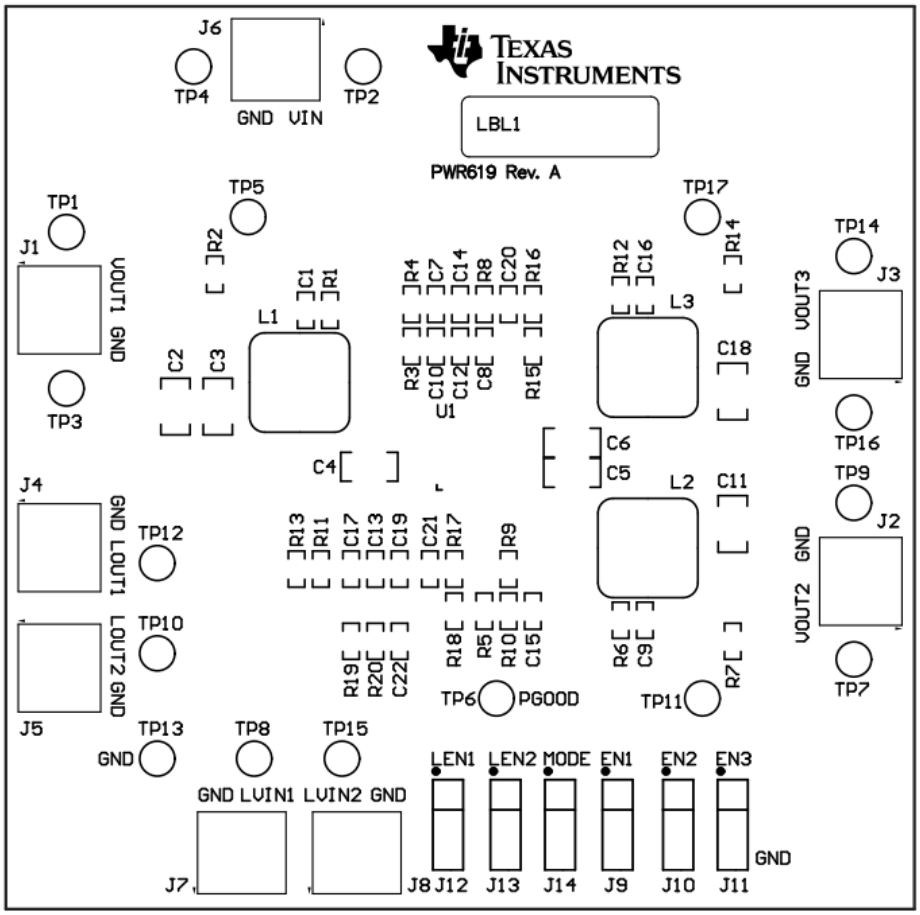

Figure 2. Component Placement (Top Layer)

Copyright © 2014, Texas Instruments Incorporated

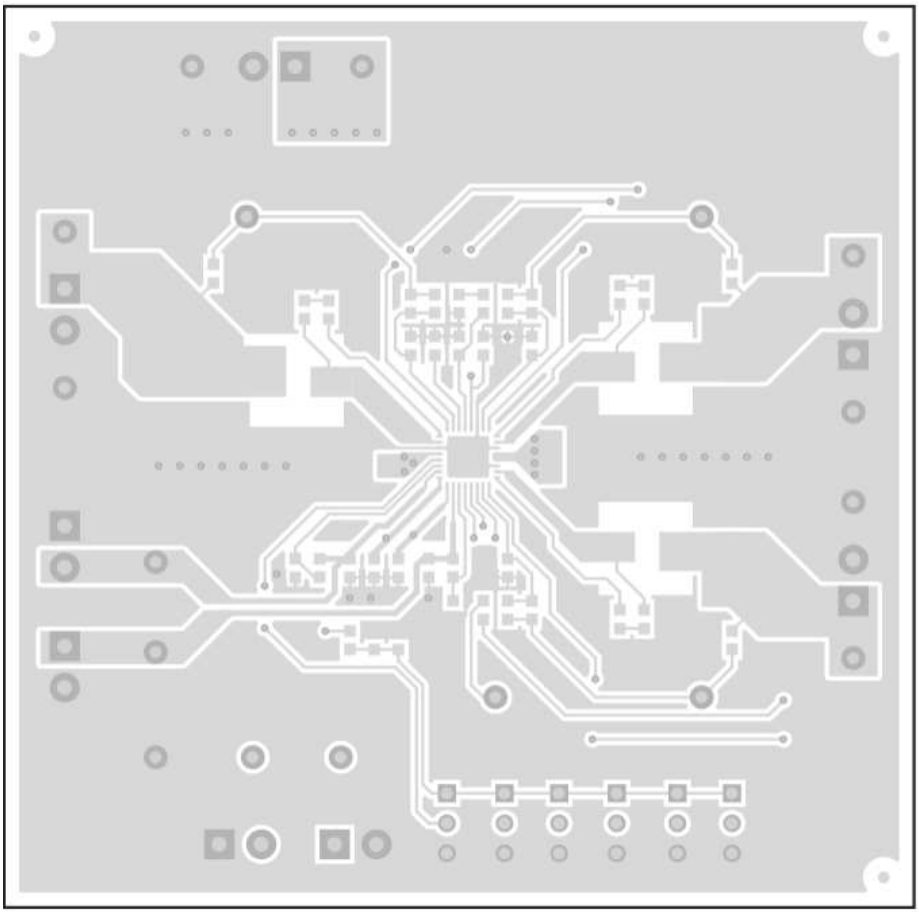

Figure 3. Board Layout (Top Layer)

Copyright © 2014, Texas Instruments Incorporated

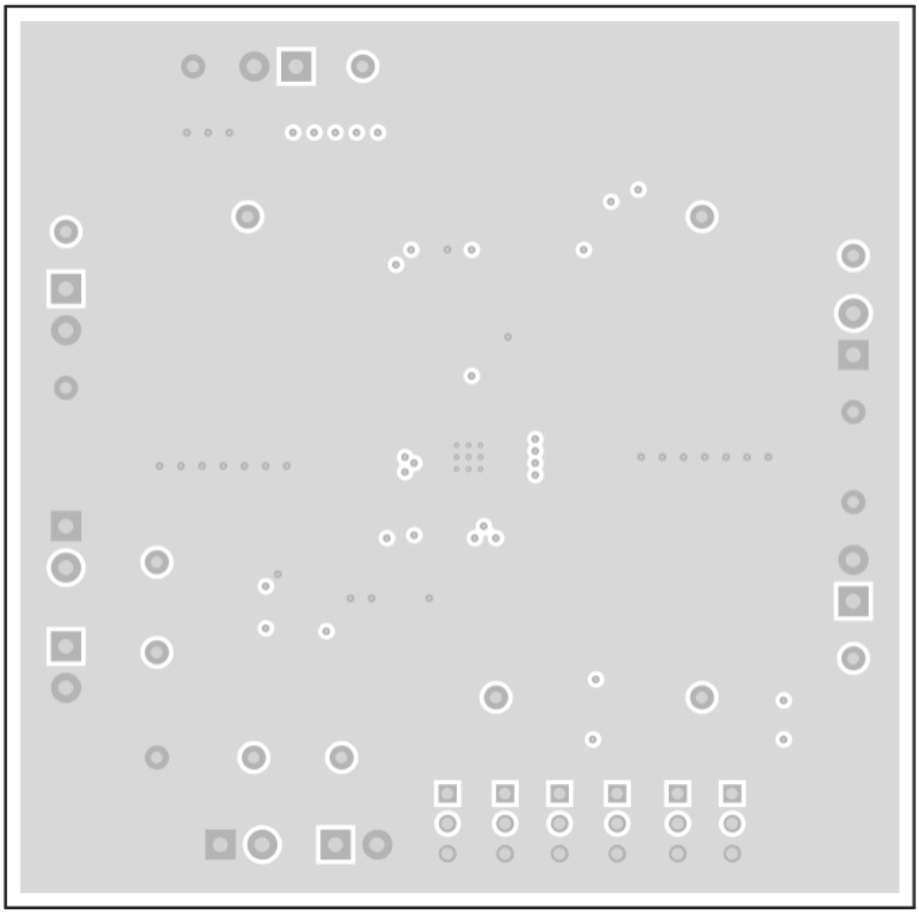

Figure 4. Board Layout (Second Layer)

Copyright © 2014, Texas Instruments Incorporated

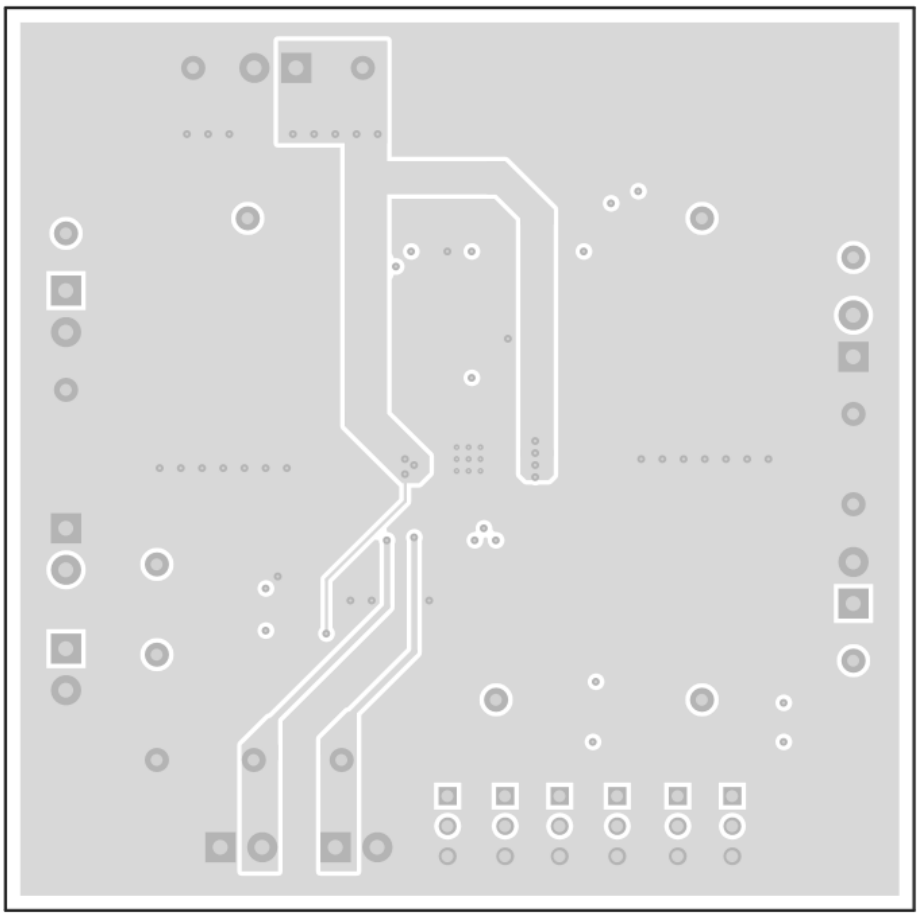

Figure 5. Board Layout (Third Layer)

Copyright © 2014, Texas Instruments Incorporated

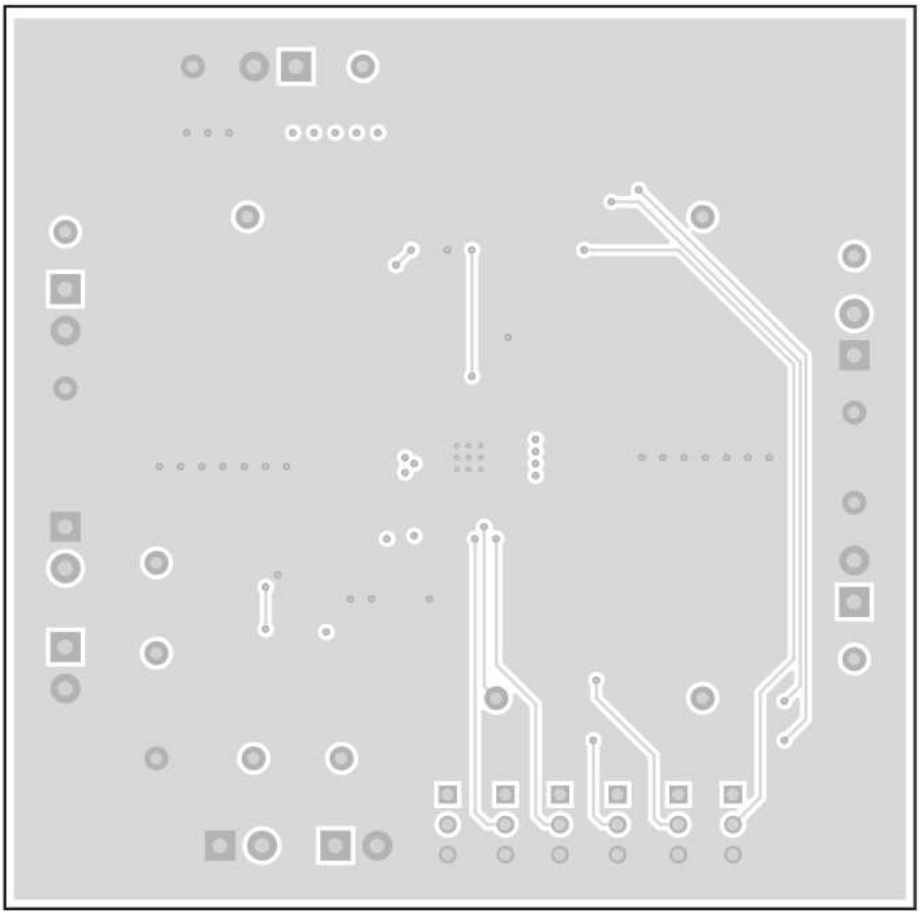

Figure 6. Board Layout (Bottom Layer)

Copyright © 2014, Texas Instruments Incorporated

4 Bench Test Setup Conditions

4.1 Headers Description and Jumper Placement

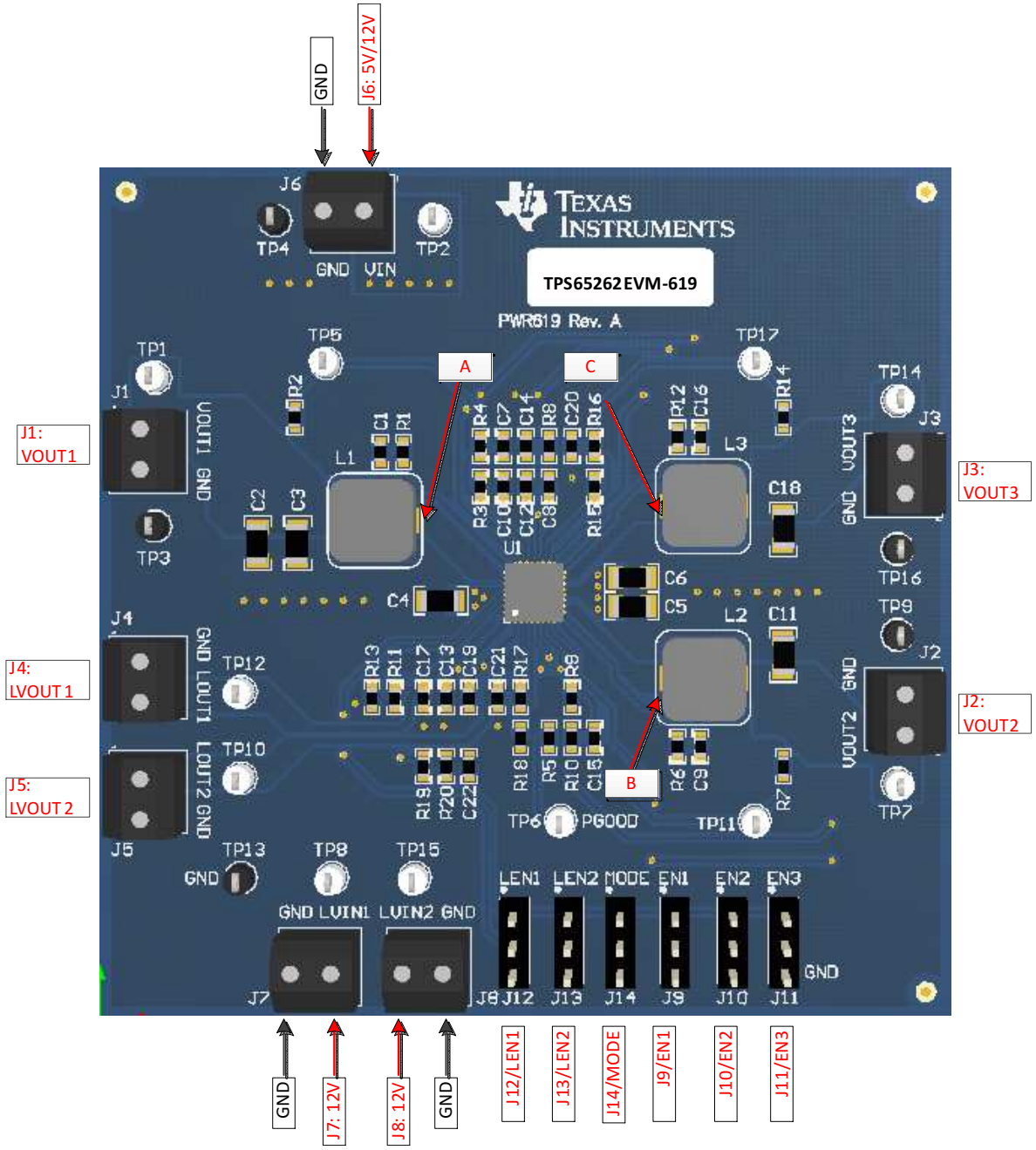

Figure 7. Headers Description and Jumper Placement

Test points:

A: LX of VOUT1

B: LX of VOUT2

C: LX of VOUT3

VOUT1, VOUT2, VOUT3, VIN, LVIN1, LVIN2, LVOUT1, LVOUT2, PGOOD

Copyright © 2014, Texas Instruments Incorporated

Table 2. Input/Output Connection

No.	Function	Description
J1	Buck1 Connector	Output of Buck1
J2	Buck2 Connector	Output of Buck2
J3	Buck3 Connector	Output of Buck3
J4	LDO1 Connector	Output of LDO1
J5	LDO2 Connector	Output of LDO2
J6	Buck1/2/3 VIN Connector	Apply power supply to this connector
J7	LDO1 VIN Connector	Apply power supply to this connector
J8	LDO2 VIN Connector	Apply power supply to this connector

Table 3. Jumpers

No.	Function	Placement
J9	Buck1 enable (EN1)	Connect EN1 to GND to disable Vout1, connect EN1 to VIN through a 100 kΩ resistor to enable Vout1; Leave open to enable Vout1
J10	Buck2 enable (EN2)	Connect EN2 to GND to disable Vout2, connect EN2 to VIN through a 100 kΩ resistor to enable Vout2; Leave open to enable Vout2
J11	Buck3 enable (EN3)	Connect EN3 to GND to disable Vout3, connect EN3 to VIN through a 100 kΩ resistor to enable Vout3; Leave open to enable Vout3
J12	LDO1 enable (LEN1)	Connect LEN1 to GND to disable LDO1, connect LEN1 to VIN through a 100 kΩ resistor to enable LDO1; Leave open to enable LDO1
J13	LDO2 enable (LEN2)	Connect LEN2 to GND to disable LDO2, connect LEN2 to VIN through a 100 kΩ resistor to enable LDO2; Leave open to enable LDO2
J14	Mode	Power sequencing mode control pin. Connect this pin to GND to set power sequence with dedicated enable pin; Connect this pin to VIN through a 100 kΩ (or leave open) set the power sequence with the pre-defined power up and power down sequence.

5 Power-Up Procedure

Power sequence with dedicated enable pin

1. Connect J14 to GND
2. Apply 4.5 V–18 V to J6
3. Apply 2.62 V–18 V to J7 (support LOUT1 2.5V in EVM setting)
4. Apply 5.12 V–18 V to J8 (support LOUT2 5.0V in EVM setting)
5. Toggle J9, J10, J11, J12 or J13 to enable VOUT1, VOUT2, VOUT3, LOUT1 or LOUT2 respectively
6. Apply loads to the output connectors

Three bucks power sequence with the pre-defined power up and power down sequence, shown in Table 4.

1. Connect J14 to high or leave open.
2. Connect J9 to High (or Low), J10 to High (or Low)
3. Apply 4.5 V–18 V to J6
4. Toggle J11 to enable Vout1, Vout2 and Vout3 (power up sequence shown in Table 4)
5. Apply loads to the output connectors

Copyright © 2014, Texas Instruments Incorporated

Table 4. Power Sequencing

MODE	EN1	EN2	EN3	Start Sequencing	Shutdown Sequencing
High	High	High	Used to start/stop bucks in sequence	Buck1→buck2→buck3	Buck3→buck2→buck1
High	Low	High		Buck2→buck1→buck3	Buck3→buck1→buck2
High	High	Low		Buck2→buck3→buck1	Buck1→buck3→buck2
High	Low	Low	Reserved	Reserved	Reserved

Copyright © 2014, Texas Instruments Incorporated

6 Bill of Materials

Table 5. Bill of Materials[1]

No.	Value	QTY.	Designator	Footprint	Manufacturer	Manufacturer Part Number	Description
1		1	PCB1		Any	PWR619	Printed Circuit Board
2	0.047uF	3	C1, C9, C16	0603	TDK	C1608X7R1H473K	CAP, CERM, 0.047uF, 50V, +/-10%, X7R, 0603
3	22uF	4	C2, C3, C11, C18	1206	AVX	1206YD226MAT2A	CAP, CERM, 22uF, 16V, +/-20%, X5R, 1206
4	10uF	3	C4, C5, C6	1206	MuRata	GRM31CR61E106KA12L	CAP, CERM, 10uF, 25V, +/-10%, X5R, 1206
5	82pF	1	C7	0603	AVX	06035A820JAT2A	CAP, CERM, 82pF, 50V, +/-5%, C0G/NP0, 0603
6	1uF	5	C8, C13, C17, C19, C21	0603	TDK	C1608X7R1E105K080AB	CAP, CERM, 1uF, 25V, +/-10%, X7R, 0603
7	0.01uF	1	C10	0603	Kemet	C0603C103J5RACTU	CAP, CERM, 0.01uF, 50V, +/-5%, X7R, 0603
8	22pF	3	C12, C15, C20	0603	AVX	06035A220JAT2A	CAP, CERM, 22pF, 50V, +/-5%, C0G/NP0, 0603
9	3300pF	1	C14	0603	Kemet	C0603C332K5RACTU	CAP, CERM, 3300pF, 50V, +/-10%, X7R, 0603
10	DNI	0	C22	0603	Kemet	C0603C103J5RACTU	CAP, CERM, 0.01uF, 50V, +/-5%, X7R, 0603
11		0	FID1, FID2, FID3	Fiducial	N/A	N/A	Fiducial mark. There is nothing to buy or mount.
12		4	H1, H2, H3, H4	Transparent Bumpon	3M	SJ-5303 (CLEAR)	Bumpon, Hemisphere, 0.44 X 0.20, Clear
13		8	J1, J2, J3, J4, J5, J6, J7, J8	7.0x8.2x6.5mm	On-Shore Technology	ED555/2DS	Terminal Block, 6A, 3.5mm Pitch, 2-Pos, TH
14		6	J9, J10, J11, J12, J13, J14	Header, 3 PIN, 100mil, Tin	Sullins Connector Solutions	PEC03SAAN	Header, 100mil, 3x1, Tin plated, TH
15	4.7uH	3	L1, L2, L3	WE-HC4	Wurth Elektronik eiSos	744311470	Inductor, Shielded Drum Core, Superflux, 4.7uH, 6A, 0.02 ohm, SMD
16		1	LBL1	PCB Label 0.650"H x 0.200"W	Brady	THT-14-423-10	Thermal Transfer Printable Labels, 0.650" W x 0.200" H - 10,000 per roll
17	0	6	R1, R2, R6, R7, R12, R14	0603	Vishay-Dale	CRCW06030000Z0EA	RES, 0 ohm, 5%, 0.1W, 0603
18	10.0k	4	R3, R4, R9, R13	0603	Vishay-Dale	CRCW060310K0FKEA	RES, 10.0k ohm, 1%, 0.1W, 0603
19	100k	2	R5, R19	0603	Vishay-Dale	CRCW0603100KFKEA	RES, 100k ohm, 1%, 0.1W, 0603
20	20.0k	2	R8, R10	0603	Vishay-Dale	CRCW060320K0FKEA	RES, 20.0k ohm, 1%, 0.1W, 0603
21	31.6k	1	R11	0603	Vishay-Dale	CRCW060331K6FKEA	RES, 31.6k ohm, 1%, 0.1W, 0603
22	8.66k	1	R15	0603	Vishay-Dale	CRCW06038K66FKEA	RES, 8.66k ohm, 1%, 0.1W, 0603
23	39.0k	1	R16	0603	Yageo America	RC0603FR-0739KL	RES, 39.0k ohm, 1%, 0.1W, 0603
24	36.5k	1	R17	0603	Vishay-Dale	CRCW060336K5FKEA	RES, 36.5k ohm, 1%, 0.1W, 0603
25	4.99k	1	R18	0603	Vishay-Dale	CRCW06034K99FKEA	RES, 4.99k ohm, 1%, 0.1W, 0603
26	51k	1	R20	0603	Vishay-Dale	CRCW060351K0JNEA	RES, 51k ohm, 5%, 0.1W, 0603
27	1x2	3	SH-J1, SH-J2, SH-J3	Shunt	3M	969102-0000-DA	Shunt, 100mil, Gold plated, Black
28	White	9	TP1, TP2, TP6, TP7, TP8, TP10, TP12, TP14, TP15	White Miniature Testpoint	Keystone	5002	Test Point, Miniature, White, TH
29	Black	5	TP3, TP4, TP9, TP13, TP16	Black Miniature Testpoint	Keystone	5001	Test Point, Miniature, Black, TH

(1) Unless otherwise noted in the Alternate Part Number and/or Alternate Manufacturer columns, all parts may be substituted with equivalents.

Copyright © 2014, Texas Instruments Incorporated

Table 5. Bill of Materials[(1)] (continued)

30	DNI	0	TP5, TP11, TP17	White Miniature Testpoint	Keystone	5002	Test Point, Miniature, White, TH
31		1	U1	RHB0032E	Texas Instruments	TPS65262RHB	TPS65262 4.5V to 18V Input Voltage, 3A/1A/1A Output Current Triple Synchronous Step-Down Converter with Dual Adjustable 200mA/100mA LDOs, RHB0032E

Copyright © 2014, Texas Instruments Incorporated

ADDITIONAL TERMS AND CONDITIONS, WARNINGS, RESTRICTIONS, AND DISCLAIMERS FOR EVALUATION MODULES

Texas Instruments Incorporated (TI) markets, sells, and loans all evaluation boards, kits, and/or modules (EVMs) pursuant to, and user expressly acknowledges, represents, and agrees, and takes sole responsibility and risk with respect to, the following:

1. User agrees and acknowledges that EVMs are intended to be handled and used for feasibility evaluation only in laboratory and/or development environments. Notwithstanding the foregoing, in certain instances, TI makes certain EVMs available to users that do not handle and use EVMs solely for feasibility evaluation only in laboratory and/or development environments, but may use EVMs in a hobbyist environment. All EVMs made available to hobbyist users are FCC certified, as applicable. Hobbyist users acknowledge, agree, and shall comply with all applicable terms, conditions, warnings, and restrictions in this document and are subject to the disclaimer and indemnity provisions included in this document.
2. Unless otherwise indicated, EVMs are not finished products and not intended for consumer use. EVMs are intended solely for use by technically qualified electronics experts who are familiar with the dangers and application risks associated with handling electrical mechanical components, systems, and subsystems.
3. User agrees that EVMs shall not be used as, or incorporated into, all or any part of a finished product.
4. User agrees and acknowledges that certain EVMs may not be designed or manufactured by TI.
5. User must read the user's guide and all other documentation accompanying EVMs, including without limitation any warning or restriction notices, prior to handling and/or using EVMs. Such notices contain important safety information related to, for example, temperatures and voltages. For additional information on TI's environmental and/or safety programs, please visit www.ti.com/esh or contact TI.
6. User assumes all responsibility, obligation, and any corresponding liability for proper and safe handling and use of EVMs.
7. Should any EVM not meet the specifications indicated in the user's guide or other documentation accompanying such EVM, the EVM may be returned to TI within 30 days from the date of delivery for a full refund. THE FOREGOING LIMITED WARRANTY IS THE EXCLUSIVE WARRANTY MADE BY TI TO USER AND IS IN LIEU OF ALL OTHER WARRANTIES, EXPRESSED, IMPLIED, OR STATUTORY, INCLUDING ANY WARRANTY OF MERCHANTABILITY OR FITNESS FOR ANY PARTICULAR PURPOSE. TI SHALL NOT BE LIABLE TO USER FOR ANY INDIRECT, SPECIAL, INCIDENTAL, OR CONSEQUENTIAL DAMAGES RELATED TO THE HANDLING OR USE OF ANY EVM.
8. No license is granted under any patent right or other intellectual property right of TI covering or relating to any machine, process, or combination in which EVMs might be or are used. TI currently deals with a variety of customers, and therefore TI's arrangement with the user is not exclusive. TI assumes no liability for applications assistance, customer product design, software performance, or infringement of patents or services with respect to the handling or use of EVMs.
9. User assumes sole responsibility to determine whether EVMs may be subject to any applicable federal, state, or local laws and regulatory requirements (including but not limited to U.S. Food and Drug Administration regulations, if applicable) related to its handling and use of EVMs and, if applicable, compliance in all respects with such laws and regulations.
10. User has sole responsibility to ensure the safety of any activities to be conducted by it and its employees, affiliates, contractors or designees, with respect to handling and using EVMs. Further, user is responsible to ensure that any interfaces (electronic and/or mechanical) between EVMs and any human body are designed with suitable isolation and means to safely limit accessible leakage currents to minimize the risk of electrical shock hazard.
11. User shall employ reasonable safeguards to ensure that user's use of EVMs will not result in any property damage, injury or death, even if EVMs should fail to perform as described or expected.
12. User shall be solely responsible for proper disposal and recycling of EVMs consistent with all applicable federal, state, and local requirements.

Certain Instructions. User shall operate EVMs within TI's recommended specifications and environmental considerations per the user's guide, accompanying documentation, and any other applicable requirements. Exceeding the specified ratings (including but not limited to input and output voltage, current, power, and environmental ranges) for EVMs may cause property damage, personal injury or death. If there are questions concerning these ratings, user should contact a TI field representative prior to connecting interface electronics including input power and intended loads. Any loads applied outside of the specified output range may result in unintended and/or inaccurate operation and/or possible permanent damage to the EVM and/or interface electronics. Please consult the applicable EVM user's guide prior to connecting any load to the EVM output. If there is uncertainty as to the load specification, please contact a TI field representative. During normal operation, some circuit components may have case temperatures greater than 60°C as long as the input and output are maintained at a normal ambient operating temperature. These components include but are not limited to linear regulators, switching transistors, pass transistors, and current sense resistors which can be identified using EVMs' schematics located in the applicable EVM user's guide. When placing measurement probes near EVMs during normal operation, please be aware that EVMs may become very warm. As with all electronic evaluation tools, only qualified personnel knowledgeable in electronic measurement and diagnostics normally found in development environments should use EVMs.

Agreement to Defend, Indemnify and Hold Harmless. User agrees to defend, indemnify, and hold TI, its directors, officers, employees, agents, representatives, affiliates, licensors and their representatives harmless from and against any and all claims, damages, losses, expenses, costs and liabilities (collectively, "Claims") arising out of, or in connection with, any handling and/or use of EVMs. User's indemnity shall apply whether Claims arise under law of tort or contract or any other legal theory, and even if EVMs fail to perform as described or expected.

Safety-Critical or Life-Critical Applications. If user intends to use EVMs in evaluations of safety critical applications (such as life support), and a failure of a TI product considered for purchase by user for use in user's product would reasonably be expected to cause severe personal injury or death such as devices which are classified as FDA Class III or similar classification, then user must specifically notify TI of such intent and enter into a separate Assurance and Indemnity Agreement.

RADIO FREQUENCY REGULATORY COMPLIANCE INFORMATION FOR EVALUATION MODULES

Texas Instruments Incorporated (TI) evaluation boards, kits, and/or modules (EVMs) and/or accompanying hardware that is marketed, sold, or loaned to users may or may not be subject to radio frequency regulations in specific countries.

General Statement for EVMs Not Including a Radio

For EVMs not including a radio and not subject to the U.S. Federal Communications Commission (FCC) or Industry Canada (IC) regulations, TI intends EVMs to be used only for engineering development, demonstration, or evaluation purposes. EVMs are not finished products typically fit for general consumer use. EVMs may nonetheless generate, use, or radiate radio frequency energy, but have not been tested for compliance with the limits of computing devices pursuant to part 15 of FCC or the ICES-003 rules. Operation of such EVMs may cause interference with radio communications, in which case the user at his own expense will be required to take whatever measures may be required to correct this interference.

General Statement for EVMs including a radio

User Power/Frequency Use Obligations: For EVMs including a radio, the radio included in such EVMs is intended for development and/or professional use only in legally allocated frequency and power limits. Any use of radio frequencies and/or power availability in such EVMs and their development application(s) must comply with local laws governing radio spectrum allocation and power limits for such EVMs. It is the user's sole responsibility to only operate this radio in legally acceptable frequency space and within legally mandated power limitations. Any exceptions to this are strictly prohibited and unauthorized by TI unless user has obtained appropriate experimental and/or development licenses from local regulatory authorities, which is the sole responsibility of the user, including its acceptable authorization.

U.S. Federal Communications Commission Compliance

For EVMs Annotated as FCC – FEDERAL COMMUNICATIONS COMMISSION Part 15 Compliant

Caution

This device complies with part 15 of the FCC Rules. Operation is subject to the following two conditions: (1) This device may not cause harmful interference, and (2) this device must accept any interference received, including interference that may cause undesired operation. Changes or modifications could void the user's authority to operate the equipment.

FCC Interference Statement for Class A EVM devices

This equipment has been tested and found to comply with the limits for a Class A digital device, pursuant to part 15 of the FCC Rules. These limits are designed to provide reasonable protection against harmful interference when the equipment is operated in a commercial environment. This equipment generates, uses, and can radiate radio frequency energy and, if not installed and used in accordance with the instruction manual, may cause harmful interference to radio communications. Operation of this equipment in a residential area is likely to cause harmful interference in which case the user will be required to correct the interference at its own expense.

FCC Interference Statement for Class B EVM devices

This equipment has been tested and found to comply with the limits for a Class B digital device, pursuant to part 15 of the FCC Rules. These limits are designed to provide reasonable protection against harmful interference in a residential installation. This equipment generates, uses and can radiate radio frequency energy and, if not installed and used in accordance with the instructions, may cause harmful interference to radio communications. However, there is no guarantee that interference will not occur in a particular installation. If this equipment does cause harmful interference to radio or television reception, which can be determined by turning the equipment off and on, the user is encouraged to try to correct the interference by one or more of the following measures:

- Reorient or relocate the receiving antenna.
- Increase the separation between the equipment and receiver.
- Connect the equipment into an outlet on a circuit different from that to which the receiver is connected.
- Consult the dealer or an experienced radio/TV technician for help.

Industry Canada Compliance (English)

For EVMs Annotated as IC – INDUSTRY CANADA Compliant:

This Class A or B digital apparatus complies with Canadian ICES-003.

Changes or modifications not expressly approved by the party responsible for compliance could void the user's authority to operate the equipment.

Concerning EVMs Including Radio Transmitters

This device complies with Industry Canada licence-exempt RSS standard(s). Operation is subject to the following two conditions: (1) this device may not cause interference, and (2) this device must accept any interference, including interference that may cause undesired operation of the device.

Concerning EVMs Including Detachable Antennas

Under Industry Canada regulations, this radio transmitter may only operate using an antenna of a type and maximum (or lesser) gain approved for the transmitter by Industry Canada. To reduce potential radio interference to other users, the antenna type and its gain should be so chosen that the equivalent isotropically radiated power (e.i.r.p.) is not more than that necessary for successful communication.

This radio transmitter has been approved by Industry Canada to operate with the antenna types listed in the user guide with the maximum permissible gain and required antenna impedance for each antenna type indicated. Antenna types not included in this list, having a gain greater than the maximum gain indicated for that type, are strictly prohibited for use with this device.

Canada Industry Canada Compliance (French)

Cet appareil numérique de la classe A ou B est conforme à la norme NMB-003 du Canada

Les changements ou les modifications pas expressément approuvés par la partie responsable de la conformité ont pu vider l'autorité de l'utilisateur pour actionner l'équipement.

Concernant les EVMs avec appareils radio

Le présent appareil est conforme aux CNR d'Industrie Canada applicables aux appareils radio exempts de licence. L'exploitation est autorisée aux deux conditions suivantes : (1) l'appareil ne doit pas produire de brouillage, et (2) l'utilisateur de l'appareil doit accepter tout brouillage radioélectrique subi, même si le brouillage est susceptible d'en compromettre le fonctionnement.

Concernant les EVMs avec antennes détachables

Conformément à la réglementation d'Industrie Canada, le présent émetteur radio peut fonctionner avec une antenne d'un type et d'un gain maximal (ou inférieur) approuvé pour l'émetteur par Industrie Canada. Dans le but de réduire les risques de brouillage radioélectrique à l'intention des autres utilisateurs, il faut choisir le type d'antenne et son gain de sorte que la puissance isotrope rayonnée équivalente (p.i.r.e.) ne dépasse pas l'intensité nécessaire à l'établissement d'une communication satisfaisante.

Le présent émetteur radio a été approuvé par Industrie Canada pour fonctionner avec les types d'antenne énumérés dans le manuel d'usage et ayant un gain admissible maximal et l'impédance requise pour chaque type d'antenne. Les types d'antenne non inclus dans cette liste, ou dont le gain est supérieur au gain maximal indiqué, sont strictement interdits pour l'exploitation de l'émetteur.

Mailing Address: Texas Instruments, Post Office Box 655303, Dallas, Texas 75265
Copyright © 2014, Texas Instruments Incorporated

Important Notice for Users of EVMs Considered "Radio Frequency Products" in Japan

EVMs entering Japan are NOT certified by TI as conforming to Technical Regulations of Radio Law of Japan.

If user uses EVMs in Japan, user is required by Radio Law of Japan to follow the instructions below with respect to EVMs:

1. Use EVMs in a shielded room or any other test facility as defined in the notification #173 issued by Ministry of Internal Affairs and Communications on March 28, 2006, based on Sub-section 1.1 of Article 6 of the Ministry's Rule for Enforcement of Radio Law of Japan,
2. Use EVMs only after user obtains the license of Test Radio Station as provided in Radio Law of Japan with respect to EVMs, or
3. Use of EVMs only after user obtains the Technical Regulations Conformity Certification as provided in Radio Law of Japan with respect to EVMs. Also, do not transfer EVMs, unless user gives the same notice above to the transferee. Please note that if user does not follow the instructions above, user will be subject to penalties of Radio Law of Japan.

http://www.tij.co.jp

【無線電波を送信する製品の開発キットをお使いになる際の注意事項】 本開発キットは技術基準適合証明を受けておりません。 本製品のご使用に際しては、電波法遵守のため、以下のいずれかの措置を取っていただく必要がありますのでご注意ください。

1. 電波法施行規則第6条第1項第1号に基づく平成18年3月28日総務省告示第173号で定められた電波暗室等の試験設備でご使用いただく。
2. 実験局の免許を取得後ご使用いただく。
3. 技術基準適合証明を取得後ご使用いただく。。

なお、本製品は、上記の「ご使用にあたっての注意」を譲渡先、移転先に通知しない限り、譲渡、移転できないものとします

上記を遵守頂けない場合は、電波法の罰則が適用される可能性があることをご留意ください。

日本テキサス・インスツルメンツ株式会社
東京都新宿区西新宿６丁目２４番１号
西新宿三井ビル
http://www.tij.co.jp

Texas Instruments Japan Limited
(address) 24-1, Nishi-Shinjuku 6 chome, Shinjuku-ku, Tokyo, Japan

IMPORTANT NOTICE

Texas Instruments Incorporated and its subsidiaries (TI) reserve the right to make corrections, enhancements, improvements and other changes to its semiconductor products and services per JESD46, latest issue, and to discontinue any product or service per JESD48, latest issue. Buyers should obtain the latest relevant information before placing orders and should verify that such information is current and complete. All semiconductor products (also referred to herein as “components”) are sold subject to TI’s terms and conditions of sale supplied at the time of order acknowledgment.

TI warrants performance of its components to the specifications applicable at the time of sale, in accordance with the warranty in TI’s terms and conditions of sale of semiconductor products. Testing and other quality control techniques are used to the extent TI deems necessary to support this warranty. Except where mandated by applicable law, testing of all parameters of each component is not necessarily performed.

TI assumes no liability for applications assistance or the design of Buyers’ products. Buyers are responsible for their products and applications using TI components. To minimize the risks associated with Buyers’ products and applications, Buyers should provide adequate design and operating safeguards.

TI does not warrant or represent that any license, either express or implied, is granted under any patent right, copyright, mask work right, or other intellectual property right relating to any combination, machine, or process in which TI components or services are used. Information published by TI regarding third-party products or services does not constitute a license to use such products or services or a warranty or endorsement thereof. Use of such information may require a license from a third party under the patents or other intellectual property of the third party, or a license from TI under the patents or other intellectual property of TI.

Reproduction of significant portions of TI information in TI data books or data sheets is permissible only if reproduction is without alteration and is accompanied by all associated warranties, conditions, limitations, and notices. TI is not responsible or liable for such altered documentation. Information of third parties may be subject to additional restrictions.

Resale of TI components or services with statements different from or beyond the parameters stated by TI for that component or service voids all express and any implied warranties for the associated TI component or service and is an unfair and deceptive business practice. TI is not responsible or liable for any such statements.

Buyer acknowledges and agrees that it is solely responsible for compliance with all legal, regulatory and safety-related requirements concerning its products, and any use of TI components in its applications, notwithstanding any applications-related information or support that may be provided by TI. Buyer represents and agrees that it has all the necessary expertise to create and implement safeguards which anticipate dangerous consequences of failures, monitor failures and their consequences, lessen the likelihood of failures that might cause harm and take appropriate remedial actions. Buyer will fully indemnify TI and its representatives against any damages arising out of the use of any TI components in safety-critical applications.

In some cases, TI components may be promoted specifically to facilitate safety-related applications. With such components, TI’s goal is to help enable customers to design and create their own end-product solutions that meet applicable functional safety standards and requirements. Nonetheless, such components are subject to these terms.

No TI components are authorized for use in FDA Class III (or similar life-critical medical equipment) unless authorized officers of the parties have executed a special agreement specifically governing such use.

Only those TI components which TI has specifically designated as military grade or “enhanced plastic” are designed and intended for use in military/aerospace applications or environments. Buyer acknowledges and agrees that any military or aerospace use of TI components which have ***not*** been so designated is solely at the Buyer's risk, and that Buyer is solely responsible for compliance with all legal and regulatory requirements in connection with such use.

TI has specifically designated certain components as meeting ISO/TS16949 requirements, mainly for automotive use. In any case of use of non-designated products, TI will not be responsible for any failure to meet ISO/TS16949.

Products		**Applications**	
Audio	www.ti.com/audio	Automotive and Transportation	www.ti.com/automotive
Amplifiers	amplifier.ti.com	Communications and Telecom	www.ti.com/communications
Data Converters	dataconverter.ti.com	Computers and Peripherals	www.ti.com/computers
DLP® Products	www.dlp.com	Consumer Electronics	www.ti.com/consumer-apps
DSP	dsp.ti.com	Energy and Lighting	www.ti.com/energy
Clocks and Timers	www.ti.com/clocks	Industrial	www.ti.com/industrial
Interface	interface.ti.com	Medical	www.ti.com/medical
Logic	logic.ti.com	Security	www.ti.com/security
Power Mgmt	power.ti.com	Space, Avionics and Defense	www.ti.com/space-avionics-defense
Microcontrollers	microcontroller.ti.com	Video and Imaging	www.ti.com/video
RFID	www.ti-rfid.com		
OMAP Applications Processors	www.ti.com/omap	**TI E2E Community**	e2e.ti.com
Wireless Connectivity	www.ti.com/wirelessconnectivity		

Mailing Address: Texas Instruments, Post Office Box 655303, Dallas, Texas 75265
Copyright © 2014, Texas Instruments Incorporated