PMIC FOR E Ink® Vizplex™ ENABLED ELECTRONIC PAPER DISPLAY

Check for Samples: TPS65185

FEATURES

- Single Chip Power Management Solution for E Ink® Vizplex™ Electronic Paper Displays
- Generates Positive and Negative Gate and Source Driver Voltages and Back-Plane Bias from a Single, Low-Voltage Input Supply
- Supports 9.7 Inch and Larger Panel Size
- 3-V to 6-V Input Voltage Range
- Boost Converter for Positive Rail Base
- Inverting Buck-Boost Converter for Negative Rail Base
- Two Adjustable LDOs for Source Driver Supply
  - LDO1: 15 V, 120 mA (VPOS)
  - LDO2: –15 V, 120 mA (VNEG)
- Accurate Output Voltage Tracking
  - VPOS - VNEG = ±50 mV
- Two Charge Pumps for Gate Driver Supply
  - CP1: 22 V, 10 mA (VDDH)
  - CP2: –20 V, 12 mA, (VEE)
- Adjustable VCOM Driver for Accurate Panel-Backplane Biasing
  - User Programmable Default
  - 0 V to -5.11 V
  - ± 1.5% accuracy (±10 mV)
  - 9-Bit Control (10-mV Nominal Step Size)
- Active Discharge on All Rails
- Flexible Power-Up and Power Down Sequencing
- Integrated 10-Ω, 3.3-V Power Switch for Disabling System Power Rail to E-Ink Panel
- Thermistor Monitoring
  - –10°C to 85°C Temperature Range
  - ±1°C Accuracy from 0°C to 50°C
- I^2C Serial Interface
  - Slave Address 0x68h
- Package Options:
  - 48-Pin, 0.5 mm Pitch, 7 mm x 7 mm x 0.9 mm (QFN) RGZ
  - 48-Pin, 0.4 mm Pitch, 6 mm x 6 mm x 0.9 mm (QFN) RSL

APPLICATIONS

- Power Supply for Active Matrix E Ink® Vizplex™ Panels
- EPD Power Supply
- E-Book Readers
- EPSON® S1D13522 (ISIS) Timing Controller
- EPSON® S1D13521 (Broadsheet) Timing Controller
- Application Processors With Integrated or Software Timing Controller (OMAP™)

PRODUCT PREVIEW

DESCRIPTION

The TPS65185 is a single-chip power supply designed to for E Ink® Vizplex™ displays used in portable e-reader applications and supports panel sizes up to 9.7 inches and greater. Two high efficiency DC/DC boost converters generate ±16-V rails which are boosted to 22 V and –20 V by two change pumps to provide the gate driver supply for the Vizplex™ panel. Two tracking LDOs create the ±15-V source driver supplies which support up to 120-mA of output current. All rails are adjustable through the I^2C interface to accommodate specific panel requirements.

Accurate back-plane biasing is provided by a linear amplifier that can be adjusted from 0 V to -5.11 V with 9-bit control through the serial interface and can source or sink current depending on panel condition. The TPS65185 supports automatic panel kickback voltage measurement which eliminates the need of manual VCOM calibration in the production line. The measurement result can be stored in non-volatile memory to become the new VCOM power-up default value.

Please be aware that an important notice concerning availability, standard warranty, and use in critical applications of Texas Instruments semiconductor products and disclaimers thereto appears at the end of this data sheet.

OMAP is a trademark of Texas Instruments.
Vizplex is a trademark of E Ink Corporation.
E Ink is a registered trademark of E Ink Corporation.
EPSON is a registered trademark of Seiko Epson Corporation.

PRODUCT PREVIEW information concerns products in the formative or design phase of development. Characteristic data and other specifications are design goals. Texas Instruments reserves the right to change or discontinue these products without notice.

Copyright © 2011, Texas Instruments Incorporated

This integrated circuit can be damaged by ESD. Texas Instruments recommends that all integrated circuits be handled with appropriate precautions. Failure to observe proper handling and installation procedures can cause damage.

ESD damage can range from subtle performance degradation to complete device failure. Precision integrated circuits may be more susceptible to damage because very small parametric changes could cause the device not to meet its published specifications.

DESCRIPTION (CONTINUED)

TPS65185 is available in two packages, a 48-pin 7x7 mm^2 QFN with 0.5-mm pitch and a 48-pin 6x6 mm^2 QFN with 0.4-mm pitch.

FUNCTIONAL BLOCK DIAGRAM

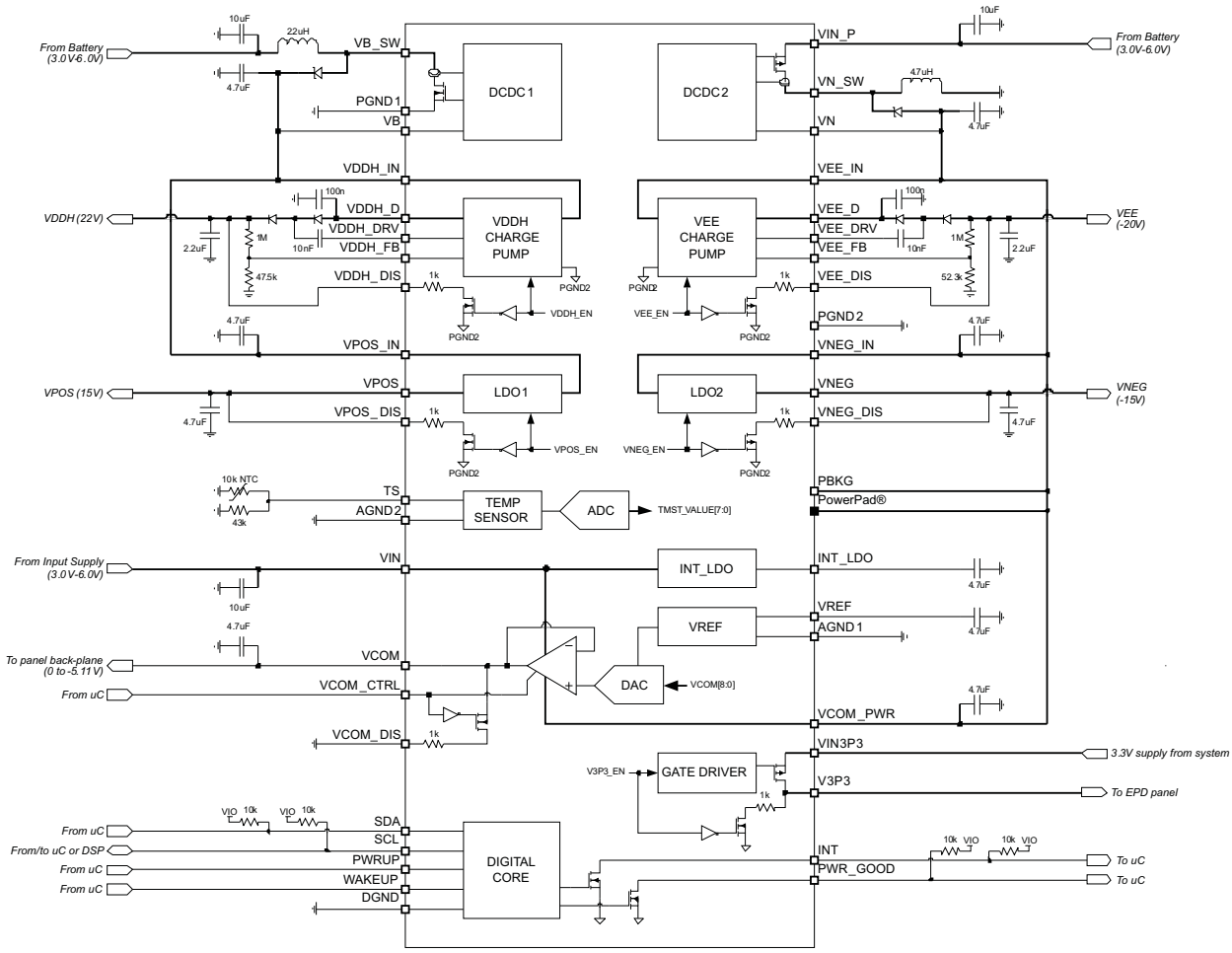

PRODUCT PREVIEW

Copyright © 2011, Texas Instruments Incorporated

ORDERING INFORMATION(1)

T_A	PACKAGE(2)	ORDERABLE PART NUMBER	TOP-SIDE MARKING
-10°C to 85°C	RGZ	TPS65185RGZR	TBD
	RSL	TPS65185RSLR	TBD

(1) For the most current package and ordering information, see the Package Option Addendum at the end of this document, or see the TI web site at www.ti.com.
(2) Package drawings, thermal data, and symbolization are available at www.ti.com/packaging.

DEVICE INFORMATION

RGZ OR RSL PACKAGE
(TOP VIEW)

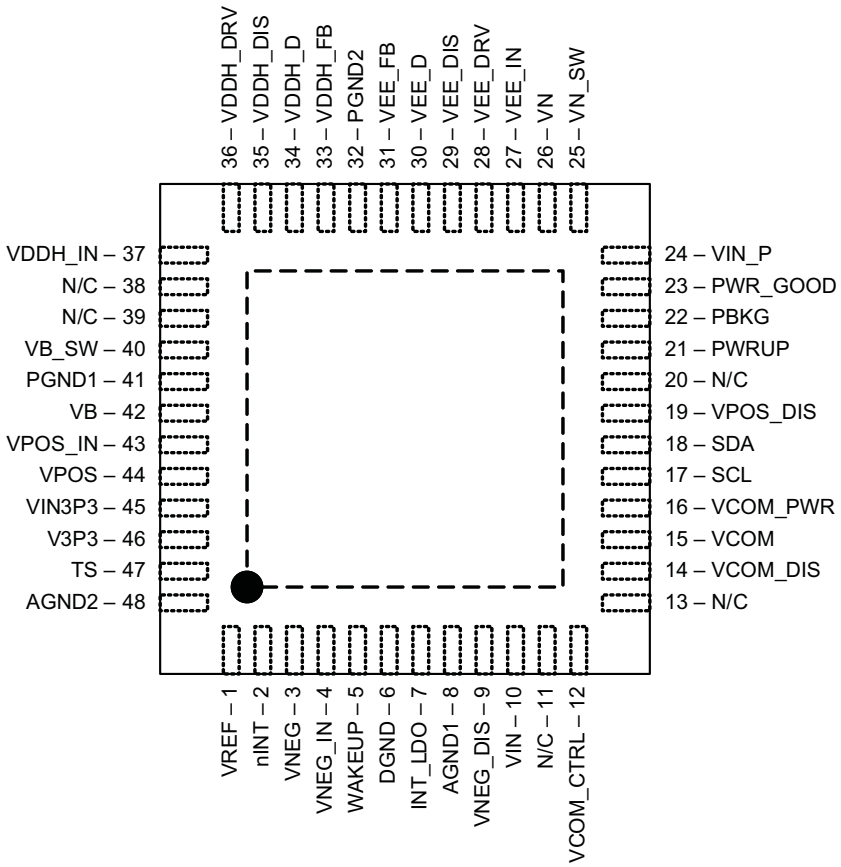

TERMINAL FUNCTIONS(3)

TERMINAL		I/O	DESCRIPTION
NAME	NO.		
VREF	1	O	Filter pin for 2.25-V internal reference to ADC
$\overline{INT}$	2	O	Open drain interrupt pin (active low)
VNEG	3	O	Negative supply output pin for panel source drivers
VNEG_IN	4	I	Input pin for LDO2 (VNEG)
WAKEUP	5	I	Wake up pin (active high). Pull this pin high to wake up from sleep mode. IC accepts I^2C commands after WAKEUP pin is pulled high but power rails remain disabled until PWRUP pin is pulled high.
DGND	6		Digital ground. Connect to ground plane.
INT_LDO	7	O	Filter pin for 2.7-V internal supply

(3) There will be 0-ns, 93.75-µs, 62.52-µs of deglitch for PWRx, WAKEUP, and VCOM_CTRL, respectively.

PRODUCT PREVIEW

Copyright © 2011, Texas Instruments Incorporated

TERMINAL		I/O	DESCRIPTION
NAME	NO.		
AGND1	8		Analog ground for general analog circuitry
VNEG_DIS	9	O	Discharge pin for VNEG. Connect to VNEG to discharge VNEG to ground whenever the rail is disabled. Leave floating if discharge function is not desired.
VIN	10	I	Input power supply to general circuitry
N/C	11		Not internally connected
VCOM_CTRL	12	I	VCOM enable. Pull this pin high to enable the VCOM amplifier. When pin is pulled low and VN is enabled, VCOM discharge is enabled.
N/C	13		Not internally connected
VCOM_DIS	14	I	Discharge pin for VCOM. Connect to ground to discharge VCOM to ground whenever VCOM is disabled. Leave floating if discharge function is not desired.
VCOM	15	O	Filter pin for panel common-voltage driver
VCOM_PWR	16	I	Internal supply input pin to VCOM buffer. Connect to the output of DCDC2.
SCL	17	I	Serial interface (I^2C) clock input
SDA	18	I/O	Serial interface (I^2C) data input/output
VPOS_DIS	19	I	Discharge pin for VPOS. Connect a resistor from VPOS_DIS to VPOS to discharge VPOS to ground whenever the rail is disabled. Leave floating if discharge function is not desired.
N/C	20		Not internally connected
PWRUP	21	I	Power-up pin. Pull this pin high to power-up all output rails.
PBKG	22		Die substrate. Connect to VN (-16 V) with short, wide trace. Wide copper trace will improve heat dissipation.
PWR_GOOD	23	O	Open drain power good output pin. Pin is pulled low when one or more rails are disabled or not in regulation. DCDC1, DCDC2, and VCOM have no effect on this pin.
VIN_P	24	I	Input power supply to inverting buck-boost converter (DCDC2)
VN_SW	25	O	Inverting buck-boost converter switch out (DCDC2)
VN	26	I	Feedback pin for inverting buck-boost converter (DCDC2) and supply for VNEG LDO and VEE charge pump
VEE_IN	27	I	Input supply pin for negative charge pump (CP2) (VEE)
VEE_DRV	28	O	Driver output pin for negative charge pump (CP2)
VEE_DIS	29	I	Discharge pin for VEE. Connect a resistor from VEE _DIS to VEE to discharge VEE to ground whenever the rail is disabled. Leave floating if discharge function is not desired.
VEE_D	30	O	Base voltage output pin for negative charge pump (CP2)
VEE_FB	31	I	Feedback pin for negative charge pump (CP2)
PGND2	32		Power ground for CP1 (VDDH) and CP2 (VEE) charge pumps
VDDH_FB	33	I	Feedback pin for positive charge pump (CP1)
VDDH_D	34	O	Base voltage output pin for positive charge pump (CP1)
VDDH_DIS	35	I	Discharge pin for VDDH. Connect to VDDH to discharge VDDH to ground whenever the rail is disabled. Leave floating if discharge function is not desired.
VDDH_DRV	36	O	Driver output pin for positive charge pump (CP1)
VDDH_IN	37	I	Input supply pin for positive charge pump (CP1)
N/C	38		Not internally connected
N/C	39		Not internally connected
VB_SW	40	O	Boost converter switch out (DCDC1)
PGND1	41		Power ground for DCDC1
VB	42	I	Feedback pin for boost converter (DCDC1) and supply for VPOS LDO and VDDH charge pump
VPOS_IN	43	I	Input pin for LDO1 (VPOS)
VPOS	44	O	Positive supply output pin for panel source drivers
VIN3P3	45	I	Input pin to 3.3-V power switch
V3P3	46	O	Output pin of 3.3-V power switch

PRODUCT PREVIEW

Copyright © 2011, Texas Instruments Incorporated

TERMINAL		I/O	DESCRIPTION
NAME	NO.		
TS	47	I	Thermistor input pin. Connect a 10k NTC thermistor and a 43k linearization resistor between this pin and AGND.
AGND2	48		Reference point to external thermistor and linearization resistor
PowerPad	N/A		Power Pad, internally connected to PBKG. Connect to VN with short, wide trace. Wide copper trace will improve heat dissipation. PowerPad must not be connected to ground.

ABSOLUTE MAXIMUM RATINGS

over operating free-air temperature range (unless otherwise noted) (1)(2)

			VALUE	UNIT
	Input voltage range at VIN(2), VIN_P, VIN3P3		–0.3 to 7	V
	Ground pins to system ground		–0.3 to 0.3	V
	Voltage range at SDA, SCL, WAKEUP, PWRUP, VCOM_CTRL, VDDH_FB, VEE_FB, PWR_GOOD, nINT		–0.3 to 3.6	V
	Voltage on VB, VB_SW, VPOS_IN, VPOS_DIS, VDDH_IN		–0.3 to 20	V
	VDDH_DIS		–0.3 to 30	V
	Voltage on VN, VEE_IN, VCOM_PWR, VNEG_DIS, VNEG_IN		–20 to 0.3	V
	Voltage from VIN_P to VN_SW		–0.3 to 30	V
	Voltage on VCOM_DIS		–5 to 0.3	V
	VEE_DIS		–30 to 0.3	V
	Peak output current		Internally limited	mA
	Continuous total power dissipation		2	W
θ_{JA}	Junction-to-ambient thermal resistance(3)		23	°C/W
T_J	Operating junction temperature		-10 to 125	°C
T_A	Operating ambient temperature(4)		-10 to 85	°C
T_{stg}	Storage temperature		-65 to 150	°C
	ESD rating	(HBM) Human body model	±2000	V
		(CDM) Charged device model	±500	

(1) Stresses beyond those listed under Absolute Maximum Ratings may cause permanent damage to the device. These are stress ratings only, and functional operation of the device at these or any other conditions beyond those indicated under Recommended Operating Conditions is not implied. Exposure to absolute maximum rated conditions for extended periods may affect device reliability.
(2) All voltage values are with respect to network ground terminal.
(3) Estimated when mounted on high K JEDEC board per JESD 51-7 with thickness of 1.6 mm, 4 layers, size of 76.2 mm X 114.3 mm, and 2 oz. copper for top and bottom plane. Actual thermal impedance will depend on PCB used in the application.
(4) It is recommended that copper plane in proper size on board be in contact with die thermal pad to dissipate heat efficiently. Thermal pad is electrically connected to PBKG, which is supposed to be tied to the output of buck-boost converter. Thus wide copper trace in the buck-boost output will help heat dissipated efficiently.

RECOMMENDED OPERATING CONDITIONS

over operating free-air temperature range (unless otherwise noted)

		MIN	NOM	MAX	UNIT
	Input voltage range at VIN, VIN_P, VIN3P3	3	3.7	6	V
	Voltage range at SDA, SCL, WAKEUP, PWRUP, VCOM_CTRL, VDDH_FB, VEE_FB, PWR_GOOD, nINT	0		3.6	V
T_A	Operating ambient temperature range	–10		85	°C
T_J	Operating junction temperature range	–10		125	°C

PRODUCT PREVIEW

Copyright © 2011, Texas Instruments Incorporated

RECOMMENDED EXTERNAL COMPONENTS

PART NUMBER	VALUE	SIZE	MANUFACTURER
INDUCTORS			
LQH44PN4R7MP0	4.7 µH	4 mm x 4 mm x 1.65 mm	Murata
NR4018T4R7M	4.7 µH	4 mm x 4 mm x 1.8 mm	Taiyo Yuden
VLS252015ET-2R2M	2.2 µH	2 mm x 2.5 mm x 1.5 mm	TDK
NR4012T2R2M	2.2 µH	4 mm x 4 mm x 1.2 mm	Taiyo Yuden
CAPACITORS			
GRM21BC81E475KA12L	4.7 µF, 25 V, X6S	805	Murata
GRM32ER71H475KA88L	4.7 µF, 50 V, X7R	1210	Murata
All other caps	X5R or better		
DIODES			
BAS3010		SOD-323	Infineon
MBR130T1		SOD-123	ON-Semi
BAV99		SOT-23	Fairchild
THERMISTOR			
NCP18XH103F03RB	10 KΩ	603	Murata

PRODUCT PREVIEW

ELECTRICAL CHARACTERISTICS

V_{IN} = 3.7 V, T_A = –10°C to 85ºC, Typical values are at T_A = 25ºC (unless otherwise noted)

PARAMETER		TEST CONDITIONS	MIN	TYP	MAX	UNIT
INPUT VOLTAGE						
V_{IN}	Input voltage range		3	3.7	6	V
V_{UVLO}	Undervoltage lockout threshold	V_{IN} falling		2.9		V
V_{HYS}	Undervoltage lockout hysteresis	V_{IN} rising		400		mV
INPUT CURRENT						
I_Q	Operating quiescent current into V_{IN}	Device switching, no load		5.5		mA
I_{STD}	Operating quiescent current into V_{IN}	Device in standby mode		130		µA
I_{SLEEP}	Shutdown current	Device in sleep mode		3.5	10	µA
INTERNAL SUPPLIES						
VI_{NT_LDO}	Internal supply			2.7		V
C_{INT_LDO}	Nominal output capacitor	Capacitor tolerance ±10%	1	4.7		µF
V_{REF}	Internal supply			2.25		V
C_{REF}	Nominal output capacitor	Capacitor tolerance ±10%	3.3	4.7		µF
DCDC1 (POSITIVE BOOST REGULATOR)						
V_{IN}	Input voltage range		3	3.7	6	V
PG	Power good threshold	Fraction of nominal output voltage		90		%
	Power good time-out	Not tested in production		50		ms
V_{OUT}	Output voltage range			16		V
	DC set tolerance		-4.5		4.5	%
I_{OUT}	Output current				250	mA
$R_{DS(ON)}$	MOSFET on resistance	V_{IN} = 3.7 V		350		mΩ
I_{LIMIT}	Switch current limit			1.5 (1)		A
	Switch current accuracy		-30		30	%
f_{SW}	Switching frequency			1		MHz
L_{DCDC1}	Inductor			2.2		µH
C_{DCDC1}	Nominal output capacitor	Capacitor tolerance ±10%	1	2x4.7		µF
ESR	Output capacitor ESR			20		mΩ

(1) Contact factory for 1-A, 2-A, or 2.5-A option.

Copyright © 2011, Texas Instruments Incorporated

ELECTRICAL CHARACTERISTICS (continued)

V_{IN} = 3.7 V, T_A = –10°C to 85ºC, Typical values are at T_A = 25ºC (unless otherwise noted)

PARAMETER		TEST CONDITIONS	MIN	TYP	MAX	UNIT
DCDC2 (INVERTING BUCK-BOOST REGULATOR)						
V_{IN}	Input voltage range		3	3.7	6	V
PG	Power good threshold	Fraction of nominal output voltage		90		%
	Power good time-out	Not tested in production		50		ms
V_{OUT}	Output voltage range			-16		V
	DC set tolerance		-4.5		4.5	%
I_{OUT}	Output current				250	mA
$R_{DS(ON)}$	MOSFET on resistance	V_{IN} = 3.7 V		350		mΩ
I_{LIMIT}	Switch current limit			1.5 (2)		A
	Switch current accuracy		-30		30	%
L_{DCDC1}	Inductor			4.7		µH
C_{DCDC1}	Nominal output capacitor	Capacitor tolerance ±10%	1	3x4.7		µF
ESR	Capacitor ESR			20		mΩ
LDO1 (VPOS)						
V_{POS_IN}	Input voltage range		15.2	16	16.8	V
PG	Power good threshold	Fraction of nominal output voltage		90		%
	Power good time-out	Not tested in production		50		ms
V_{SET}	Output voltage set value	V_{IN} = 16 V, VSET[2:0] = 0x3h to 0x6h	14.25		15	V
$V_{INTERVAL}$	Output voltage set resolution	V_{IN} = 16 V		250		mV
V_{OUTTOL}	Output tolerance	V_{SET} = 15 V, I_{LOAD} = 20 mA	-1		1	%
$V_{DROPOUT}$	Dropout voltage	I_{LOAD} = 120 mA			250	mV
$V_{LOADREG}$	Load regulation – DC	I_{LOAD} = 10% to 90%			1	%
I_{LOAD}	Load current range				120	mA
I_{LIMIT}	Output current limit		120			mA
R_{DIS}	Discharge impedance to ground	Enabled when rail is disabled	800	1000	1200	Ω
	Mismatch to any other RDIS		-2		2	%
C_{LDO1}	Nominal output capacitor	Capacitor tolerance ±10%	1	4.7		µF
LDO2 (VNEG)						
V_{NEG_IN}	Input voltage range		15.2	16	16.8	V
PG	Power good threshold	Fraction of nominal output voltage		90		%
	Power good time-out	Not tested in production		50		ms
V_{SET}	Output voltage set value	V_{IN} = –16 V VSET[2:0] = 0x3h to 0x6h	-15		-14.25	V
$V_{INTERVAL}$	Output voltage set resolution	V_{IN} = –16 V		250		mV
V_{OUTTOL}	Output tolerance	V_{SET} = –15 V, I_{LOAD} = –20 mA	-1		1	%
$V_{DROPOUT}$	Dropout voltage	I_{LOAD} = 120 mA			250	mV
$V_{LOADREG}$	Load regulation – DC	I_{LOAD} = 10% to 90%			1	%
I_{LOAD}	Load current range				120	mA
I_{LIMIT}	Output current limit		180			mA
R_{DIS}	Discharge impedance to ground	Enabled when rail is disabled	800	1000	1200	Ω
	Mismatch to any other RDIS		-2		2	%
T_{SS}	Soft start time	Not tested in production		1		ms
C_{LDO2}	Nominal output capacitor	Capacitor tolerance ±10%	1	4.7		µF

(2) Contact factory for 1-A, 2-A, or 2.5-A option.

PRODUCT PREVIEW

Copyright © 2011, Texas Instruments Incorporated

ELECTRICAL CHARACTERISTICS (continued)

V_{IN} = 3.7 V, T_A = –10°C to 85ºC, Typical values are at T_A = 25ºC (unless otherwise noted)

PARAMETER		TEST CONDITIONS	MIN	TYP	MAX	UNIT
LD01 (POS) AND LDO2 (VNEG) TRACKING						
V_{DIFF}	Difference between VPOS and VNEG	V_{SET} = ±15 V, I_{LOAD} = ±20 mA, 0°C to 60°C	-50		50	mV
VCOM DRIVER						
I_{VCOM}	Drive current			15		mA
V_{COM}	Allowed operating range	Outside this range VCOM is shut down and VCOMF interrupt is set	-5.5		1	V
	Accuracy	VCOM[8:0] = 0x07Dh (-1.25 V), V_{IN} = 3.4 V to 4.2 V, no load	-0.8		0.8	%
		VCOM[8:0] = 0x07Dh (-1.25 V), V_{IN} = 3.0 V to 6.0 V, no load	-1.5		1.5	
	Output voltage range		-5.11		0	V
	Resolution	1LSB		10		mV
	Max number of EEPROM writes	V_{COM} calibration			100	
R_{IN}	Input impedance, HiZ state	HiZ = 1	150			MΩ
R_{DIS}	Discharge impedance to ground	VCOM_CTRL = low, HiZ = 0	800	1000	1200	Ω
	Mismatch to any other R_{DIS}		-2		2	%
C_{VCOM}	Nominal output capacitor	Capacitor tolerance ±10%	3.3	4.7		µF
CP1 (VDDH) CHARGE PUMP						
V_{DDH_IN}	Input voltage range		15.2	16	16.8	V
PG	Power good threshold	Fraction of nominal output voltage		90		%
	Power good time-out	Not tested in production		50		ms
V_{FB}	Feedback voltage			0.998		V
	Accuracy	I_{LOAD} = 2 mA	-2		2	%
V_{DDH_OUT}	Output voltage range	V_{SET} = 22 V, I_{LOAD} = 2 mA	21	22	23	V
I_{LOAD}	Load current range				10	mA
f_{SW}	Switching frequency			560		KHz
R_{DIS}	Discharge impedance to ground	Enabled when rail is disabled	800	1000	1200	Ω
	Mismatch to any other R_{DIS}		-2		2	%
C_D	Driver capacitor			10		nF
C_O	Output capacitor		1	2.2		µF
CP2 (VEE) NEGATIVE CHARGE PUMP						
V_{EE_IN}	Input voltage range		15.2	16	16.8	V
PG	Power good threshold	Fraction of nominal output voltage		90		%
	Power good time-out	Not tested in production		50		ms
V_{FB}	Feedback voltage			-0.994		V
	Accuracy	I_{LOAD} = 2 mA	-2		2	%
V_{EE_OUT}	Output voltage range	V_{SET} = –20 V, I_{LOAD} = 3 mA	-21	-20	-19	V
I_{LOAD}	Load current range				12	mA
f_{SW}	Switching frequency			560		KHz
R_{DIS}	Discharge impedance to ground	Enabled when rail is disabled	800	1000	1200	Ω
	Mismatch to any other R_{DIS}		-2		2	%
C_D	Driver capacitor			10		nF
C_O	Nominal output capacitor	Capacitor tolerance ±10%	1	2.2		µF

PRODUCT PREVIEW

Copyright © 2011, Texas Instruments Incorporated

ELECTRICAL CHARACTERISTICS (continued)

V_{IN} = 3.7 V, T_A = –10°C to 85ºC, Typical values are at T_A = 25ºC (unless otherwise noted)

PARAMETER		TEST CONDITIONS	MIN	TYP	MAX	UNIT
THERMISTOR MONITOR(3)						
A_{TMS}	Temperature to voltage ratio	Not tested in production		-0.0161		V/°C
$Offset_{TMS}$	Offset	Temperature = 0°C		1.575		V
V_{TMS_HOT}	Temp hot trip voltage (T = 50°C)	TEMP_HOT_SET = 0x8C		0.768		V
V_{TMS_COOL}	Temp hot escape voltage (T = 45°C)	TEMP_COOL_SET = 0x82		0.845		V
V_{TMS_MAX}	Maximum input level			2.25		V
R_{NTC_PU}	Internal pull up resistor			7.307		KΩ
R_{LINEAR}	External linearization resistor			43		KΩ
ADC_{RES}	ADC resolution	Not tested in production, 1 bit		16.1		mV
ADC_{DEL}	ADC conversion time	Not tested in production		19		µs
$TMST_{TOL}$	Accuracy	Not tested in production	-1		1	LSB
LOGIC LEVELS AND TIMING CHARTERISTICS (SCL, SDA, PWR_GOOD, PWRx, WAKEUP)						
V_{OL}	Output low threshold level	I_O = 3 mA, sink current (SDA, nINT, PWR_GOOD)			0.4	V
V_{IL}	Input low threshold level				0.4	V
V_{IH}	Input high threshold level		1.2			V
$I_{(bias)}$	Input bias current	V_{IO} = 1.8 V			1	µA
$t_{deglitch}$	Deglitch time, WAKEUP pin	Not tested in production		500		µs
	Deglitch time, PWRUP pin	Not tested in production		400		
$t_{discharge}$	Discharge delay	Not tested in production		100(4)		ms
f_{SCL}	SCL clock frequency				400	KHz
	I^2C slave address	7-bit address		0x68h(5)		
OSCILLATOR						
f_{OSC}	Oscillator frequency			9		MHz
	Frequency accuracy	T_A = –40°C to 85°C	-10		10	%
THERMAL SHUTDOWN						
T_{SHTDWN}	Thermal trip point			150		°C
	Thermal hysteresis			20		°C

(3) 10-kΩ Murata NCP18XH103F03RB thermistor (1%) in parallel with a linearization resistor (43 kΩ, 1%) are used at TS pin for panel temperature measurement.
(4) Contact factory for 50-ms, 200-ms or 400-ms option.
(5) Contact factory for alternate address of 0x48h.

PRODUCT PREVIEW

Copyright © 2011, Texas Instruments Incorporated

PRODUCT PREVIEW

TYPICAL CHARACTERISTICS

DEFAULT POWER-UP SEQUENCE

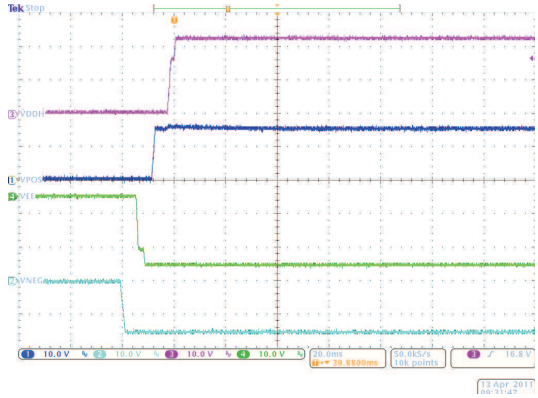

Figure 1.

DEFAULT POWER-DOWN SEQUENCE

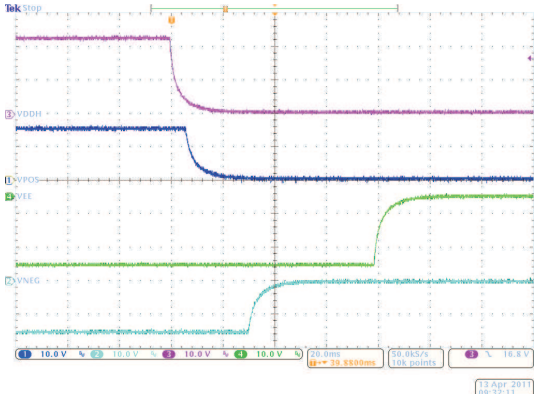

Figure 2.

INRUSH CURRENT @ V_{IN} = 3.7 V, C_{IN} = 100 µF

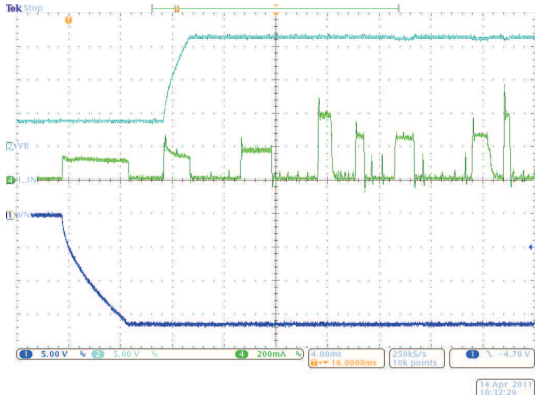

Figure 3.

INRUSH CURRENT @ V_{IN} = 5 V, C_{IN} = 100 µF

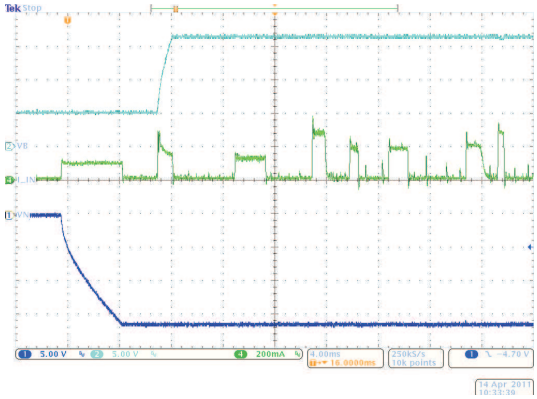

Figure 4.

SWITCHING WAVE FORMS, VN
V_{IN} = 3 V, $R_{LOAD, VPOS}$ = 330 Ω, $R_{LOAD, VNEG}$ = 330 Ω, No Load on VDDH, VEE

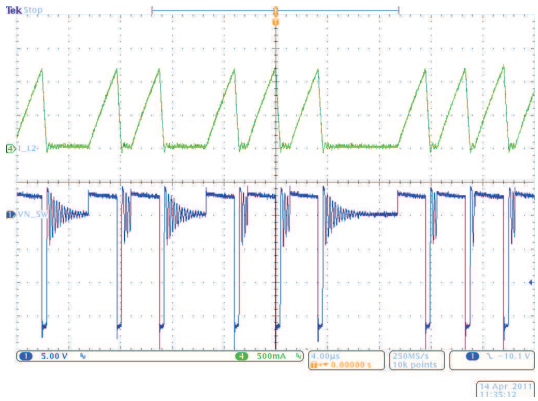

Figure 5.

SWITCHING WAVE FORMS, VB
V_{IN} = 3 V, $R_{LOAD, VPOS}$ = 330 Ω, $R_{LOAD, VNEG}$ = 330 Ω, No Load on VDDH, VEE

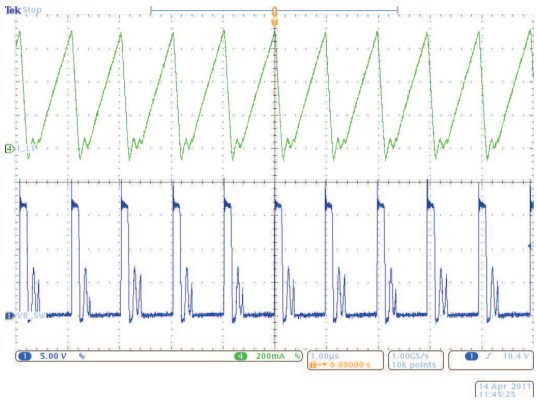

Figure 6.

Copyright © 2011, Texas Instruments Incorporated

TYPICAL CHARACTERISTICS (continued)

SWITCHING WAVE FORMS, VN

V_{IN} = 3.7 V, $R_{LOAD, VPOS}$ = 330 Ω, $R_{LOAD, VNEG}$ = 330 Ω, No Load on VDDH, VEE

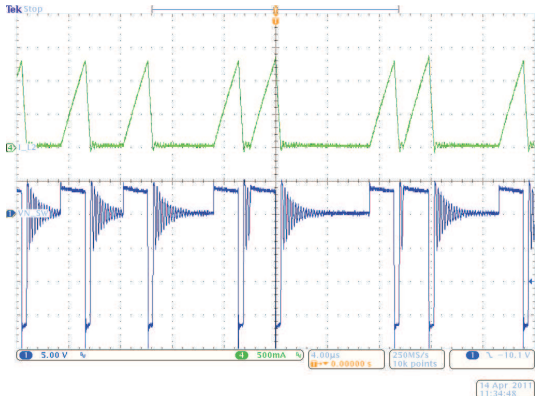

Figure 7.

SWITCHING WAVE FORMS, VB

V_{IN} = 3.7 V, $R_{LOAD, VPOS}$ = 330 Ω, $R_{LOAD, VNEG}$ = 330 Ω, No Load on VDDH, VEE

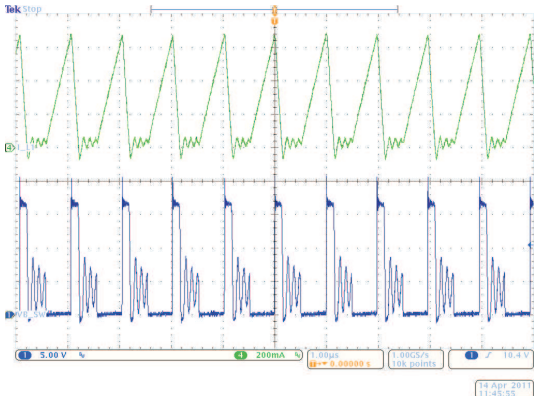

Figure 8.

SWITCHING WAVE FORMS, VN

V_{IN} = 5 V, $R_{LOAD, VPOS}$ = 330 Ω, $R_{LOAD, VNEG}$ = 330 Ω, No Load on VDDH, VEE

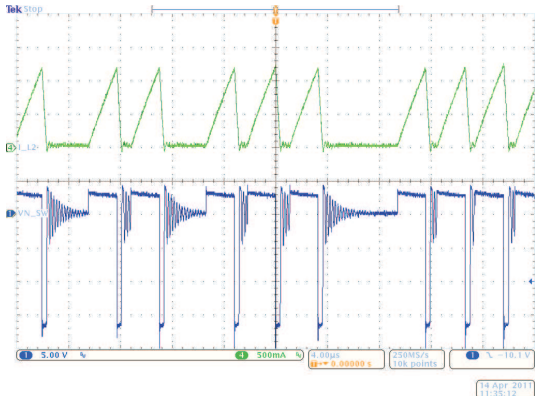

Figure 9.

SWITCHING WAVE FORMS, VB

V_{IN} = 5 V, $R_{LOAD, VPOS}$ = 330 Ω, $R_{LOAD, VNEG}$ = 330 Ω, No Load on VDDH, VEE

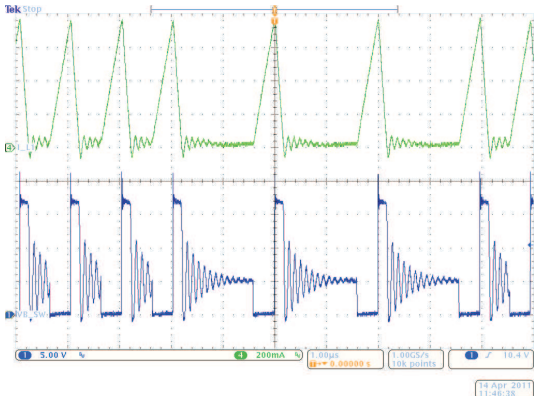

Figure 10.

VN DCDC EFFICIENCY, T = 25°C

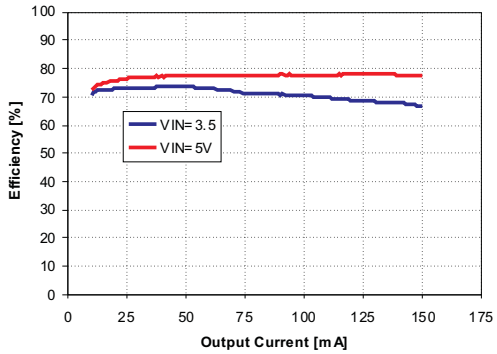

Figure 11.

VB DCDC EFFICIENCY, T = 25°C

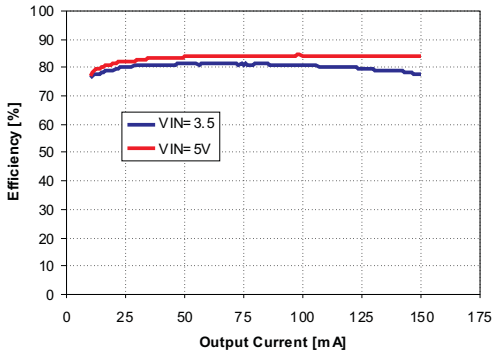

Figure 12.

PRODUCT PREVIEW

Copyright © 2011, Texas Instruments Incorporated

TYPICAL CHARACTERISTICS (continued)

VEE CHARGE PUMP EFFICIENCY, T = 25°C

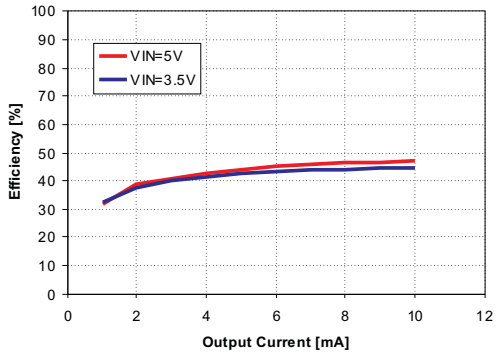

Figure 13.

VDDH CHARGE PUMP EFFICIENCY, T = 25°C

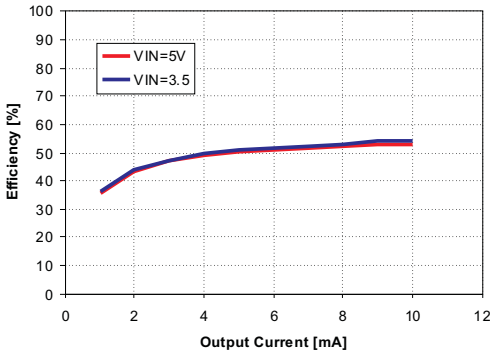

Figure 14.

3p3V SWITCH IMPEDANCE
V_{IN} = 3.7 V, $I_{LOAD,\ V3p3}$ = 10 mA

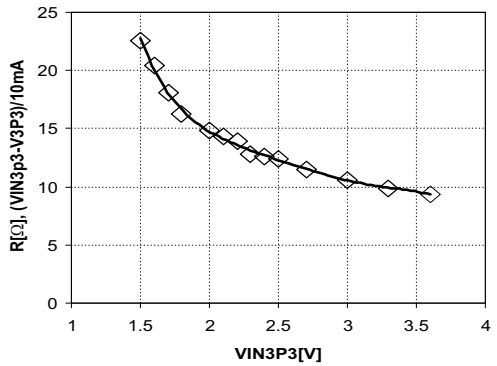

Figure 15.

SOURCE DRIVER SUPPLY TRACKING
V_{IN} = 3.7 V

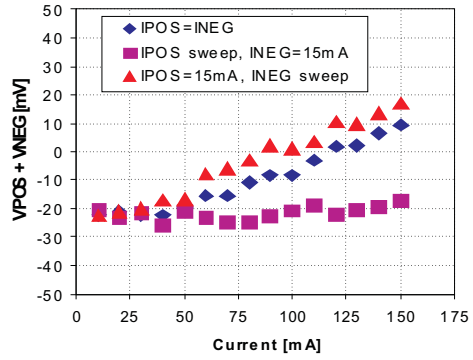

Figure 16.

VCOM INTEGRATED NON-LINEARITY
V_{IN} = 3.7 V, $R_{LOAD,\ VCOM}$ = 1 kΩ

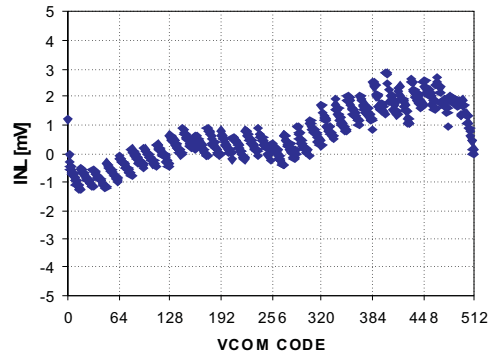

Figure 17.

VCOM DIFFERENTIAL NON-LINEARITY
V_{IN} = 3.7 V, $R_{LOAD,\ VCOM}$ = 1 kΩ

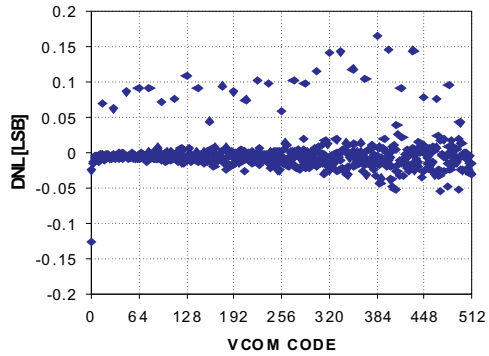

Figure 18.

PRODUCT PREVIEW

Copyright © 2011, Texas Instruments Incorporated

TYPICAL CHARACTERISTICS (continued)

KICKBACK VOLTAGE MEASUREMENT ERROR
V_{IN} = 3.7 V

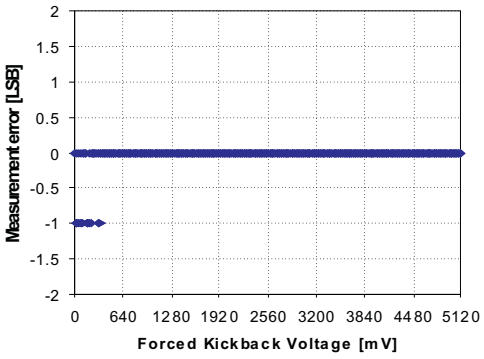

Figure 19.

KICKBACK VOLTAGE MEASUREMENT TIMING
V_{IN} = 3.7 V; AVG[1:0] = 00 (Single Measurement)
Time from ACQ Bit Set to ACQC Interrupt Received

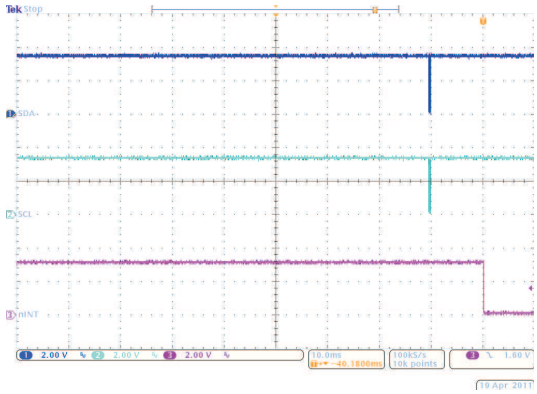

Figure 20.

KICKBACK VOLTAGE MEASUREMENT TIMING
V_{IN} = 3.7 V; AVG[1:0] = 11 (Eight Measurements)
Time from ACQ Bit Set to ACQC Interrupt Received

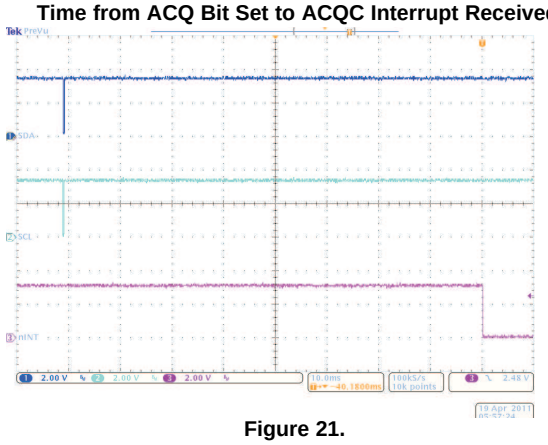

Figure 21.

PRODUCT PREVIEW

MODES OF OPERATION

The TPS65185 has three modes of operation, SLEEP, STANDBY, and ACTIVE. SLEEP mode is the lowest-power mode in which all internal circuitry is turned off. In STANDBY, all power rails are shut down but the device is ready to accept commands through the I^2C interface. In ACTIVE mode one or more power rails are enabled.

SLEEP

This is the lowest power mode of operation. All internal circuitry is turned off, registers are reset to default values and the device does not respond to I^2C communications. TPS65185 enters SLEEP mode whenever WAKEUP pin is pulled low.

STANDBY

In STANDBY all internal support circuitry is powered up and the device is ready to accept commands through the I^2C interface but none of the power rails are enabled. The device enters STANDBY mode when the WAKEUP pin is pulled high and either the PWRUP pin is pulled low or the STANDBY bit is set. The device also enters STANDBY mode if input Under Voltage Lock Out (UVLO), positive boost Under Voltage (VB_UV), or inverting buck-boost Under Voltage (VN_UV) is detected, thermal shutdown occurs, or the PROG bit is set (see VCOM calibration).

ACTIVE

The device is in ACTIVE mode when any of the output rails are enabled and no fault condition is present. This is the normal mode of operation while the device is powered up.

PRODUCT PREVIEW

MODE TRANSISITONS

SLEEP → ACTIVE

WAKEUP pin is pulled high with PWRUP pin high. Rails come up in the order defined by the UPSEQx registers (OK to tie WAKEUP and PWRUP pin together).

SLEEP → STANDBY

WAKEUP pin is pulled high with PWRUP pin low. Rails will remain powered down.

STANDBY → ACTIVE

WAKEUP pin is high and PWRRUP pin is pulled high (rising edge) or the ACTIVE bit is set. Output rails will power up in the order defined by the UPSEQx registers.

ACTIVE → STANDBY

WAKEUP pin is high and STANDBY bit is set or PWRUP pin is pulled low (falling edge). Rails are shut down in the order defined by DWNSEQx registers. Device also enters STANDBY in the event of Thermal Shut Down (TSD), Under Voltage Lock Out (UVLO), positive boost or inverting buck-boost Under Voltage (UV), VCOM fault (VCOMF), or when the PROG bit is set (see VCOM calibration).

STANDBY → SLEEP

WAKEUP pin is pulled low while none of the output rails are enabled.

ACTIVE → SLEEP

WAKEUP pin is pulled low while at least one output rail is enabled. Rails are shut down in the order defined by DWNSEQx registers.

Copyright © 2011, Texas Instruments Incorporated

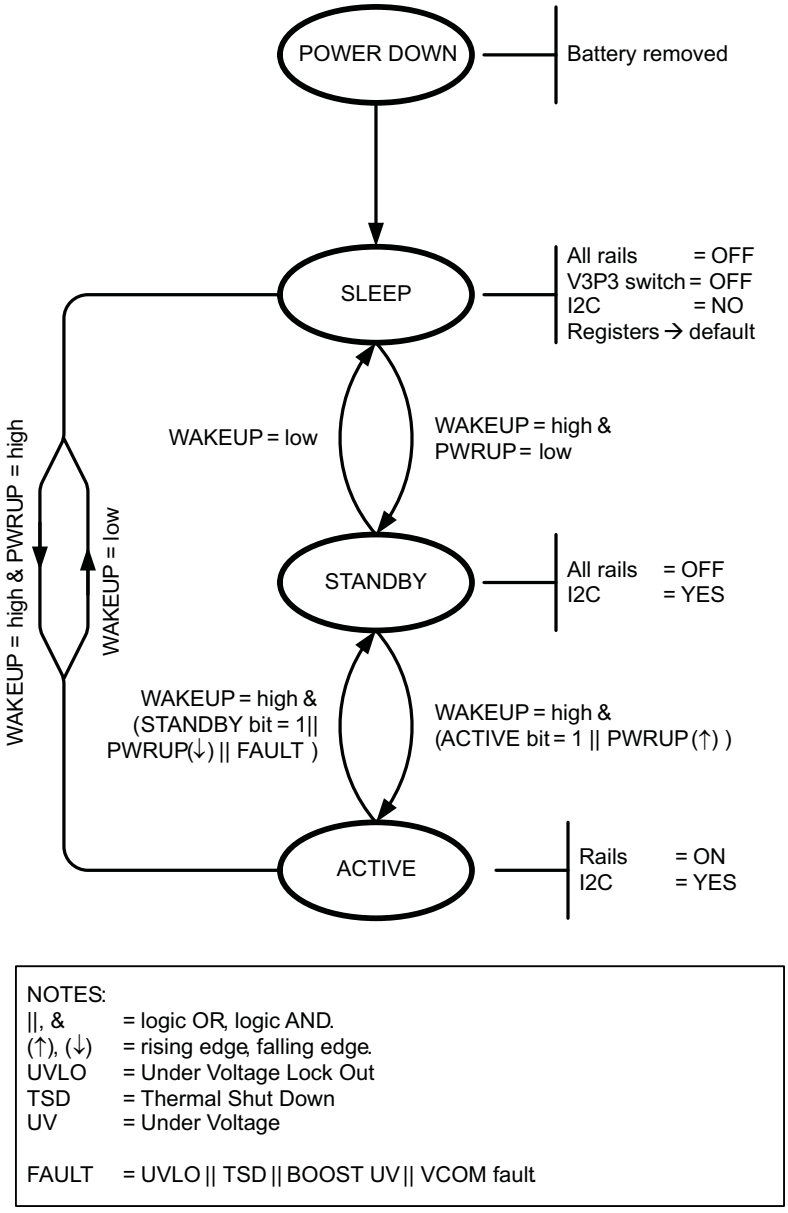

Figure 22. Global State Diagram

PRODUCT PREVIEW

WAKE-UP AND POWER UP SEQUENCING

The power-up/down order and timing is defined by user register settings. The default settings support the E Ink® Vizplex™ panel and typically do not need to be changed.

In SLEEP mode the TPS65185 is completely turned off, the I^2C registers are reset, and the device does not accept any I^2C transaction. Pull the WAKEUP pin high with the PWRUP pin low and the device enters STANDBY mode which enables the I^2C interface. Write to the UPSEQ0 register to define the order in which the output rails are enabled at power-up and to the UPSEQ1 registers to define the power-up delays between rails. Finally, set the ACTIVE bit in the ENABLE register to '1' to execute the power-up sequence and bring up all power rails. Alternatively pull the PWRUP pin high (rising edge).

After the ACTIVE bit has been set, the negative boost converter (VN) is powered up first, followed by the positive boost (VB). The positive boost enable is gated by the internal power-good signal of the negative boost. Once VB is in regulation, it issues an internal power-good signal and after delay time UDLY1 has expired, STROBE1 is issued. The rail assigned to STROBE1 will power up next and after its power-good signal has been asserted and delay time UDLY2 has expired, STROBE2 is issued. The sequence continues until STROBE4 has occurred and the last rail has been enabled.

To power-down the device, set the STANDBY bit of the ENABLE register to '1' or pull the PWRUP pin low (falling edge) and the TPS65185 will power down in the order defined by DWNSEQx registers. The delay times DDLY2, DDLY3, and DDLY4 are weighted by a factor of DFCTR which allows the user to space out the power-down of the rails to avoid crossing during discharge. DFCTR is located in register DWNSEQ1. The positive boost (VB) is shut down together with the last rail at STROBE4. However, the negative boost (VN) remains up and running for another 100 ms (discharge delay) to allow complete discharge of all rails. After the discharge delay, VN is powered down and the device enters STANDBY or SLEEP mode, depending on the WAKEUP pin.

If either the ACTIVE bit is set or the PWRUP pin is pulled high while the device is powering down, the power-down sequence (STROBE1-4) is completed first, followed by a power-up sequence. VB and VN may or may not be powered down and the discharge delay may be cut short depending on the relative timing of STROBE4 to the new power-up event.

During power-up, if the STANDBY bit is set or the PWRUP pin is pulled low, the power-up sequence is aborted and the power-down sequence starts immediately.

DEPENDENCIES BETWEEN RAILS

Charge pumps, LDOs, and VCOM driver are dependent on the positive and inverting buck-boost converters and several dependencies exist that affect the power-up sequencing. These dependencies are listed below.

1. Inverting buck-boost (DCDC2) must be in regulation before positive boost (DCDC1) can be enabled. Internally, DCDC1 enable is gated by DCDC2 power good.
2. Positive boost (DCDC1) must be in regulation before LDO2 (VNEG) can be enabled. Internally LDO2 enable is gated DCDC1 power-good.
3. Positive boost (DCDC1) must be in regulation before VCOM can be enabled; Internally VCOM enable is gated by DCDC1 power good.
4. Positive boost (DCDC1) must be in regulation before negative charge pump (CP2) can be enabled. Internally CP2 enable is gated by DCDC1 power good.
5. Positive boost (DCDC1) must be in regulation before positive charge pump (CP1) can be enabled. Internally CP1 enable is gated by DCDC1 power good.
6. LDO2 must be in regulation before LDO1 can be enabled. Internally LDO1 enable is gated by LDO2 power good.

PRODUCT PREVIEW

Copyright © 2011, Texas Instruments Incorporated

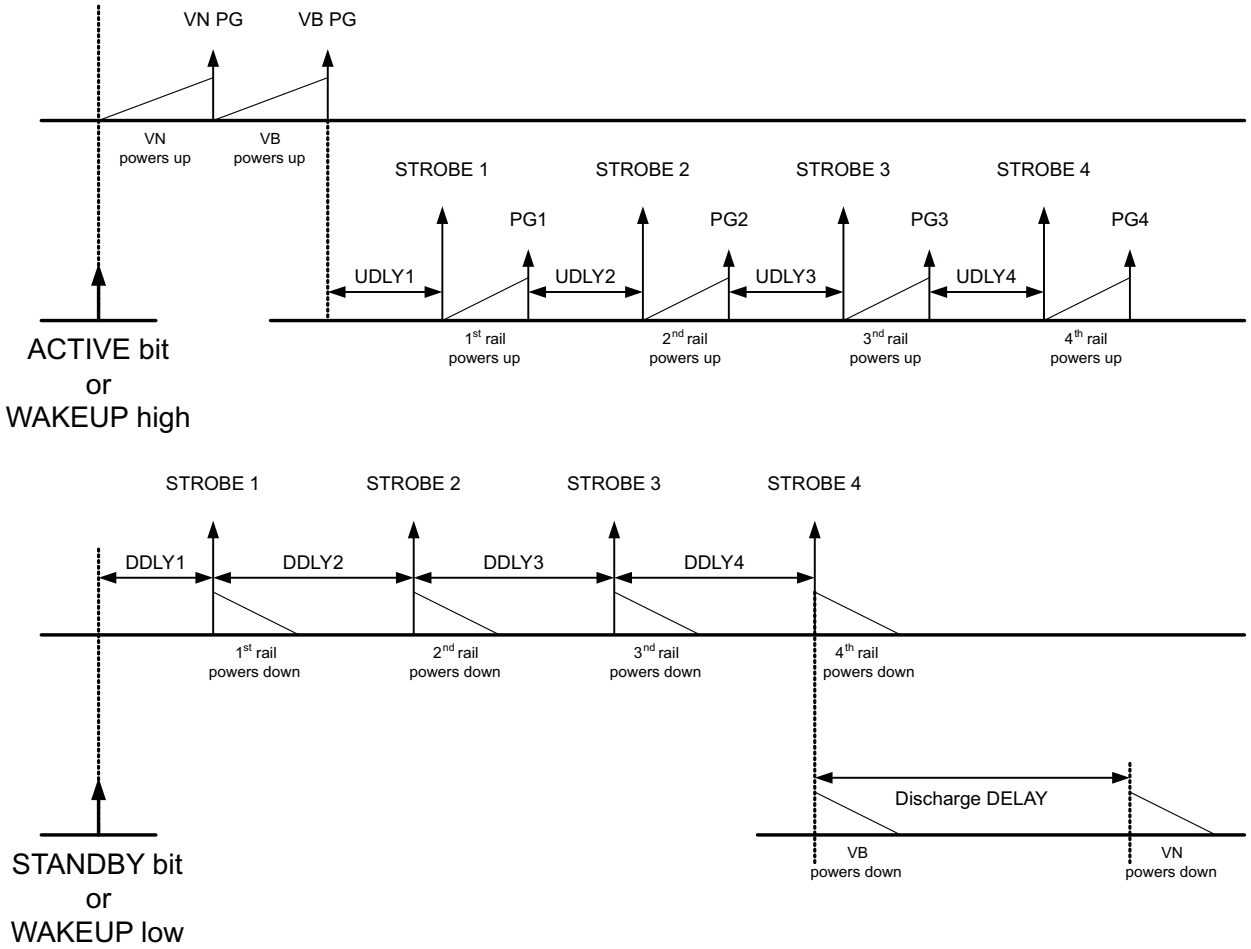

TOP: Power-up sequence is defined by assigning strobes to individual rails. STROBE1 is the first strobe to occur after ACTIVE bit is set and STROBE4 is the last event in the sequence. Strobes are assigned to rails in UPSEQ0 register and delays between STROBES are defined in UPSEQ1 register.

BOTTOM: Power-down sequence is independent of power-up sequence. Strobes and delay times for power down sequence are set in DWNSEQ0 and DWNSEQ1 register.

Figure 23. Power-Up and Power-Down Sequence

PRODUCT PREVIEW

Copyright © 2011, Texas Instruments Incorporated

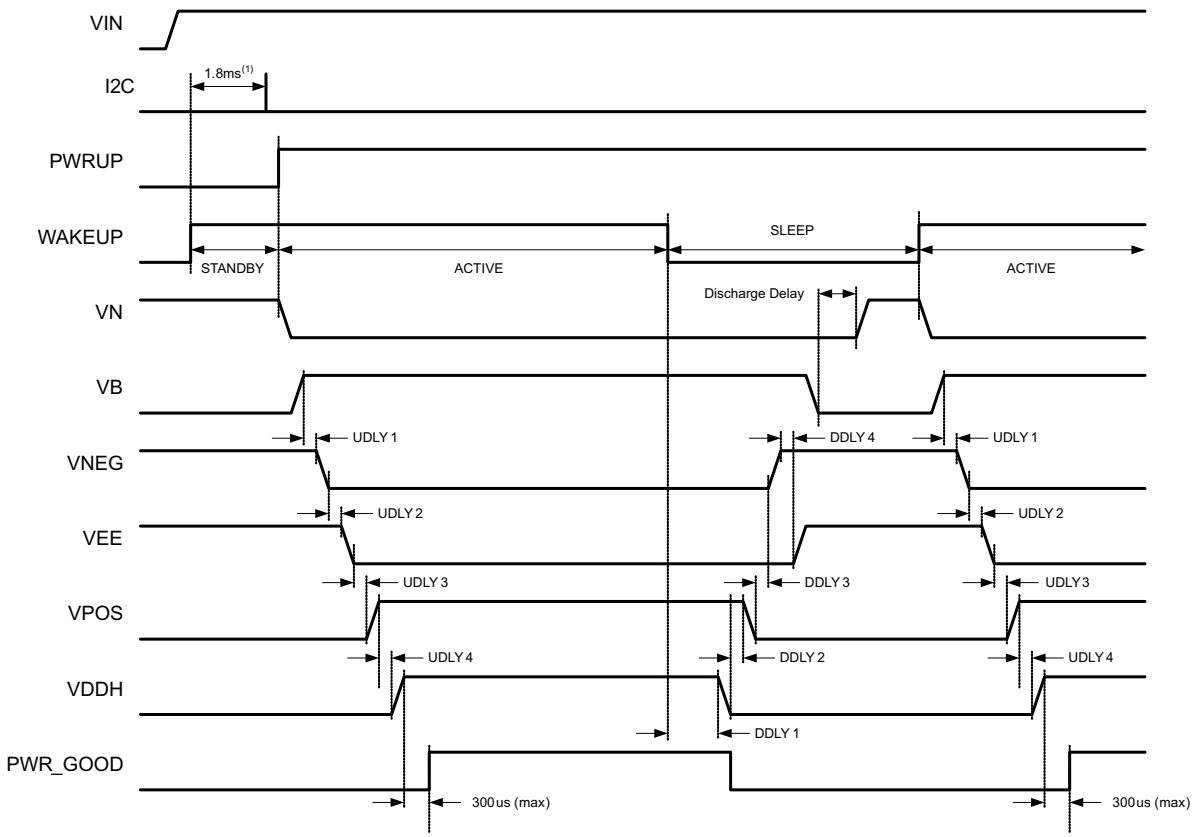

(1) Minimum delay time between WAKEUP rising edge and IC rady to accept I 2C transaction .

In this example the first power-up sequence is started by pulling the PWRUP pin high (rising edge). Power-down is initiated by pulling the WAKEUP pin low (device enters SLEEP mode). The 2nd power-up sequence is initiated by pulling the WAKEUP pin high while the PWRUP pin is also high (power up from SLEEP to ACTIVE).

Figure 24. Power-Up and Power-Down Timing Diagram

SOFTSTART

TPS65185 supports soft-start for all rails, i.e. inrush current is limited during startup of DCDC1, DCDC2, LDO1, LDO2, CP1 and CP2. If DCDC1 or DCDC2 are unable to reach power-good status within 50 ms, the corresponding UV flag is set in the interrupt registers, the interrupt pin is pulled low, and the device enters STANDBY mode. LDO1, LDO2, positive and negative charge pumps also have a 50-ms power-good time-out limit. If either rail is unable to power up within 50 ms after it has been enabled, the corresponding UV flag is set and the interrupt pin is pulled low. However, the device will remain in ACTIVE mode in this case.

ACTIVE DISCHARGE

TPS65185 provides low-impedance discharge paths for the display power rails (VEE, VNEG, VPOS, VDDH, and VCOM) which are enabled whenever the corresponding rail is disabled. The discharge paths are connected to the rails on the PCB which allows adding external resistors to customize the discharge time. However, external resistors are not required.

Active discharge remains enabled for 100 ms after the last rail has been disabled (STROBE4 has been executed). During this time the negative boost converter (VN) remains up. After the discharge delay, VN is shut down and the device enters STANDBY or SLEEP mode, depending on the state of the WAKEUP pin.

PRODUCT PREVIEW

Copyright © 2011, Texas Instruments Incorporated

VPOS/VNEG SUPPLY TRACKING

LDO1 (VPOS) and LDO2 (VNEG) track each other in a way that they are of opposite sign but same magnitude. The sum of VLDO1 and VLOD2 is guaranteed to be < 50 mV.

V3P3 POWER SWITCH

The integrated power switch is used to cut the 3.3-V supply to the EPD panel and is controlled through the V3P3_EN pin of the ENABLE register. In SLEEP mode the switch is automatically turned off and its output is discharged to ground. The default power-up state is OFF. To turn the switch ON, set the V3P3_ENbit to 1.

VCOM ADJUSTMENT

VCOM is the output of a power-amplifier with an output voltage range of 0 V to -5.11 V, adjustable in 10-mV steps. In a typical application VCOM is connected to the VCOM terminal of the EPD panel and the amplifier is controlled through the VCOM_CTRL pin. With VCOM_CTRL high, the amplifier drives the VCOM pin to the voltage specified by the VCOM1 and VCOM2 register. When pulled low, the amplifier turns off and VCOM is actively discharged to ground through VCOM_DIS pin. If active discharge is not desired, simply leave the VCOM_DIS pin open.

For ease of design, the VCOM_CTRL pin may also be tied to the battery or IO supply. In this case, VCOM is enabled with STROBE4 during the power-up sequence and disabled on STROBE1 of the power-down sequence. Therefore VCOM is the last rail to be enabled and the first to be disabled.

KICK-BACK VOLTAGE MEASUREMENT

TPS65185 can perform a voltage measurement on the VCOM pin to determine the kick-back voltage of the panel. This allows in-system calibration of VCOM. To perform a kick-back voltage measurement, follow these steps:

- Pull the WAKEUP pin and the PWRUP pin high to enable all output rails.
- Set the HiZ bit in the VCOM2 register. This puts the VCOM pin in a high-impedance state.
- Drive the panel with the Null waveform. Refer to E-Ink specification for detail.
- Set the ACQ bit in the VCOM2 register to 1. This starts the measurement routine.
- When the measurement is complete, the ACQC (Acquisition Complete) bit in the INT1 register is set and the nINT pin is pulled low.
- The measurement result is stored in the VCOM[8:0] bits of the VCOM1 and VCOM2 register.

Please note that the measurement result is not automatically programmed into non-volatile memory. Changing the power-up default is described in the following paragraph.

STORING THE VCOM POWER-UP DEFAULT VALUE IN MEMORY

The power-up default value of VCOM can be user-set and programmed into non-volatile memory. To do so, write the default value to the VCOM[8:0] bits of the VCOM1 and VCOM2 register, then set the PROG bit in VCOM2 register to 1. First, all power rails are shut-down, then the VCOM[8:0] value is committed to non-volatile memory such that it becomes the new power-up default. Once programming is complete, the PRGC bit in the INT1 register is set and the nINT pin is pulled low. To verify that the new value has been saved properly, first write the VCOM[8:0] bits to 0x000h, then pull the WAKEUP pin low. After the WAKEUP pin is pulled back high, read the VCOM[8:0] bits to verify that the new default value is correct.

PRODUCT PREVIEW

Copyright © 2011, Texas Instruments Incorporated

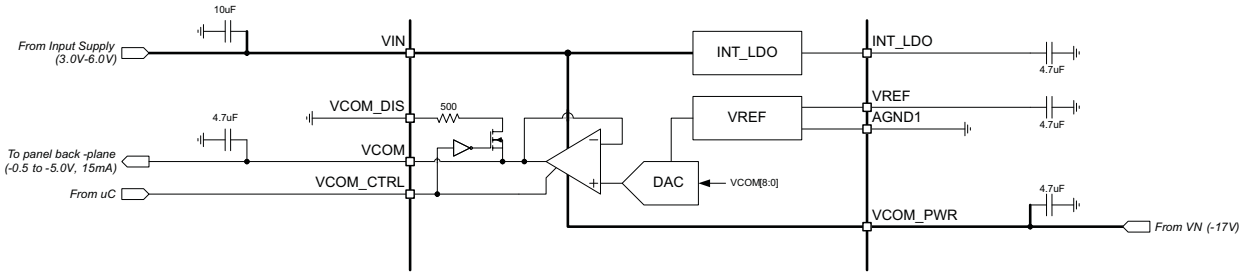

Figure 25. Block Diagram of VCOM Circuit

PRODUCT PREVIEW

Copyright © 2011, Texas Instruments Incorporated

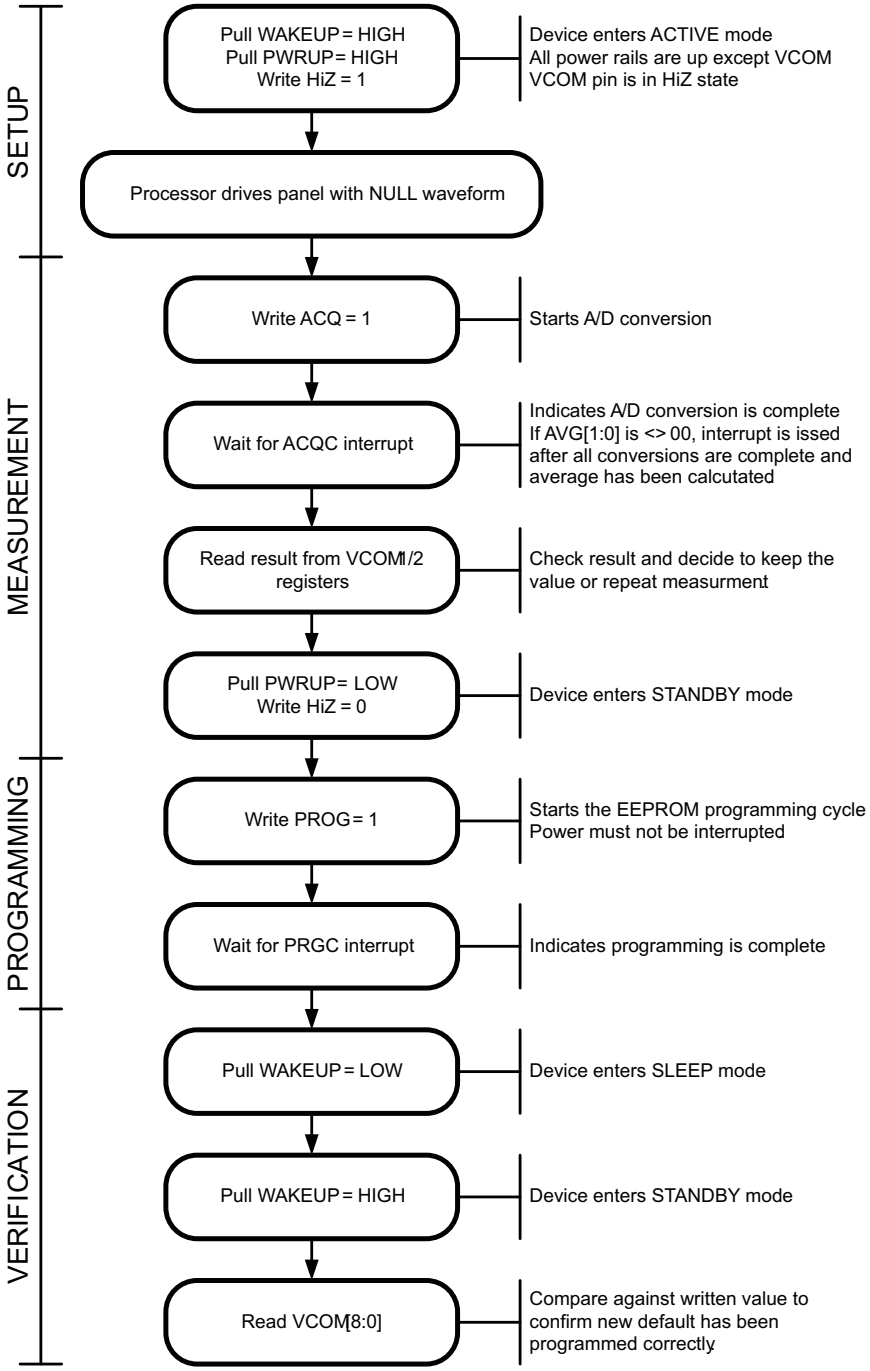

Figure 26. VCOM Calibration Flow

PRODUCT PREVIEW

Copyright © 2011, Texas Instruments Incorporated

FAULT HANDLING AND RECOVERY

The TPS65185 monitors input and output voltages and die temperature and will take action if operating conditions are outside normal limits. Whenever the TPS65185 encounters:

- Thermal Shutdown (TSD)
- Positive Boost Under Voltage (VB_UV)
- Inverting Buck-Boost Under Voltage (VN_UV)
- Input Under Voltage Lock Out (UVLO)

it shuts down all power rails and enters STANDBY mode. Shut-down follows the order defined by DWNSEQx registers. The exception is VCOM fault witch leads to immediate shutdown of all rails. Once a fault is detected, the PWR_GOOD and nINT pins are pulled low and the corresponding interrupt bit is set in the interrupt register. Power rails cannot be re-enabled unless the interrupt bits have been cleared by reading the INT1 and INT2 register. Alternatively, toggling the WAKEUP pin also resets the interrupt bits. As the PWRUP input is edge sensitive, the host must toggle the PWRUP pin to re-enable the rails through GPIO control, i.e. it must bring the PWRUP pin low before asserting it again. Alternatively rails can be re-enbled through the I^2C interface.

Whenever the TPS65185 encounters under-voltage on VNEG (VNEG_UV), VPOS (VPOS_UV), VEE (VEE_UV) or VDDH (VDDH_UV), rails are not shut down but the PWR_GOOD and nINT is pulled low with the corresponding interrupt bit set. The device remains in ACTIVE mode and recovers automatically once the fault has been removed.

PRODUCT PREVIEW

POWER GOOD PIN

The power good pin (PWR_GOOD) is an open drain output that is pulled high (by an external pull-up resistor) when all four power rails (CP1, CP2, LDO1, LDO2) are in regulation and is pulled low if any of the rails encounters a fault or is disabled. PWR_GOOD remains low if one of the rails is not enabled by the host and only after all rails are in regulation PWR_GOOD is released to HiZ state (pulled up by external resistor).

INTERRUPT PIN

The interrupt pin (nINT) is an open drain output that is pulled low whenever one or more of the INT1 or INT2 bits are set. The nINT pin is released (returns to HiZ state) and fault bits are cleared once the register with the set bit has been read by the host. If the fault persists, the nINT pin will be pulled low again after a maximum of 32 µs.

Interrupt events can be masked by re-setting the corresponding enable bit in the INT_EN1 and INT_EN2 register, i.e. the user can determine which events cause the nINT pin to be pulled low. The status of the enable bits affects the nINT pin only and has no effect on any of the protection and monitoring circuits or the INT1/INT2 bits themselves.

Note that persisting faults such as thermal shutdown can cause the nINT pin to be pulled low for an extended period of time which can keep the host in a loop trying to resolve the interrupt. If this behavior is not desired, set the corresponding mask bit after receiving the interrupt and keep polling the INT1/INT2 register to see when the fault condition has disappeared. After the fault is resolved, unmask the interrupt bit again.

PANEL TEMPERATURE MONITORING

The TPS65185 provides circuitry to bias and measure an external Negative Temperature Coefficient Resistor (NTC) to monitor the display panel temperature in a range from -10°C to 85°C with and accuracy of ±1°C from 0°C to 50°C. Temperature measurement must be triggered by the controlling host and the last temperature reading is always stored in the TMST_VALUE register. Interrupts are issued when the temperature exceeds the programmable HOT, or drops below the programmable COLD threshold, or when the temperature has changed by more than a user-defined threshold from the baseline value. Details are explained under “HOT, COLD, and temperature-change interrupts”.

Copyright © 2011, Texas Instruments Incorporated

NTC BIAS CIRCUIT

Figure 27 below shows the block diagram of the NTC bias and measurement circuit. The NTC is biased from an internally generated 2.25-V reference voltage through an integrated 7.307-KΩ bias resistor. A 43-kΩ resistor is connected parallel to the NTC to linearize the temperature response curve. The circuit is designed to work with a nominal 10-kΩ NTC and achieves accuracy of ±1°C from 0°C to 50°C. The voltage drop across the NTC is digitized by a 10-bit SAR ADC and translated into an 8-bit two's complement by digital per Table 1.

Table 1. ADC Output Value vs Termperature

TEMPERATURE	TMST_VALUE[7:0]
< -10°C	1111 0110
-10°C	1111 0110
-9°C	1111 0111
...	...
-2°C	1111 1110
-1°C	1111 1111
0°C	0000 0000
1°C	0000 0001
2°C	0000 0010
...	...
25°C	0001 1001
...	
85°C	0101 0101
> 85°C	0101 0101

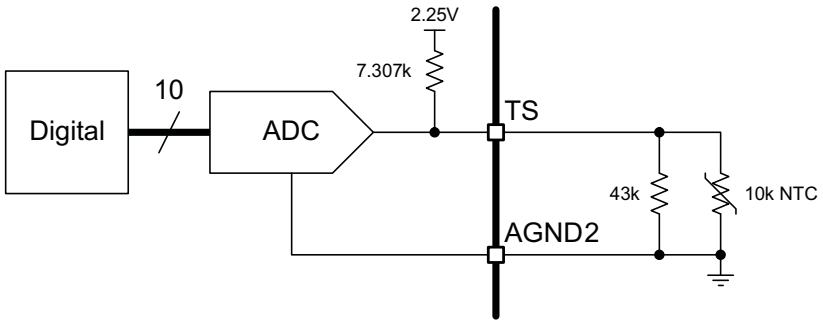

Figure 27. NTC Bias and Measurement Circuit

A temperature measurement is triggered by setting the READ_THERM bit of the TMST1 register to 1.During the A/D conversion the CONV_END bit of the TMST1 register reads '0', otherwise it reads '1'. At the end of the A/D conversion the EOC bit in the INT2 register is set and the temperature value is available in the TMST_VALUE register.

HOT, COLD, AND TEMPERATURE-CHANGE INTERRUPTS

Each temperature acquisition is compared against the programmable TMST_HOT and TMST_COLD thresholds and to the baseline temperature, to determine if the display is within allowed operating temperature range and if the temperature has changed by more than a user-defined threshold since the last update. The first temperature reading after the WAKEUP pin has been pulled high automatically becomes the baseline temperature. Any subsequent reading is compared against the baseline temperature. If the difference is equal or greater than the threshold value, an interrupt is issued (DTX bit in register INT1 is set to '1') and the latest value becomes the new baseline. If the difference is less than the threshold value, no action is taken. The threshold value is defined by DT[1:0] bits in the TMST1 register and has a default value of ±2°C. In summary:

- When the temperature is equal or less than the TMST_COLD[3:0] threshold, the TMST_COLD interrupt bit of the INT1 register is set, and the nINT pin is pulled low.
- When the temperature is greater than TMST_COLD but lower then TMST_HOT, no action is taken.

PRODUCT PREVIEW

Copyright © 2011, Texas Instruments Incorporated

- When the temperature is equal or greater than the TMST_HOT[3:0] threshold, the TMST_HOT interrupt bit of the INT1 register is set, and the nINT pin is pulled low.
- If the last temperature is different from the baseline temperature by ±2°C (default) or more, the DTX interrupt bit of the INT1 register is set. The latest temperature becomes the new baseline temperature. Please note that by default the DTX interrupt is disabled, i.e. the nINT pin is not pulled low unless the DTX_EN bit was previously set high.
- If the last temperature change is less than ±2°C (default), no action is taken.

TYPICAL APPLICATION OF THE TEMPERATURE MONITOR

In a typical application the temperature monitor and interrupts are used in the following manner:

- After the WAKEUP pin has been pulled high, the Application Processor (AP) writes 0x80h to the TMST1 register (address 0x0Dh). This starts the temperature measurement.
- The AP waits for the EOC interrupt. Alternatively the AP can poll the CONV_END bit in register TMST1. This will notify the AP that the A/D conversion is complete and the new temperature reading is available in the TMST_VALUE register (address (0x00h).
- The AP reads the temperature value from the TMST_VALUE register (address (0x00h).
- If the temperature changes by ±2°C (default) or more from the first reading, the processor is notified by the DTX interrupt. The A/P may or may not decide to select a different set of wave forms to drive the panel.
- If the temperature is outside the allowed operating range of the panel, the processor is notified by the THOT and TCOLD interrupts, respectively. It may or may not decide to continue with the page update.
- Once an over/under temperature has been detected, the AP should reset the TMST_HOT_EN or TMST_COLD_EN bits, respectively, to avoid the nINT pin to be continuously pulled low. The TMST_HOT and TMST_COLD interrupt bits then should be polled continuously, to determine when the panel temperature recovers to the normal operating range. Once the temperature has recovered, the TMST_HOT_EN or TMST_COLD_EN bits should be set to '1' again and normal operation can resume.

I²C BUS OPERATION

The TPS65185 hosts a slave I²C interface that supports data rates up to 400 kbit/s and auto-increment addressing and is compliant to I²C standard 3.0.

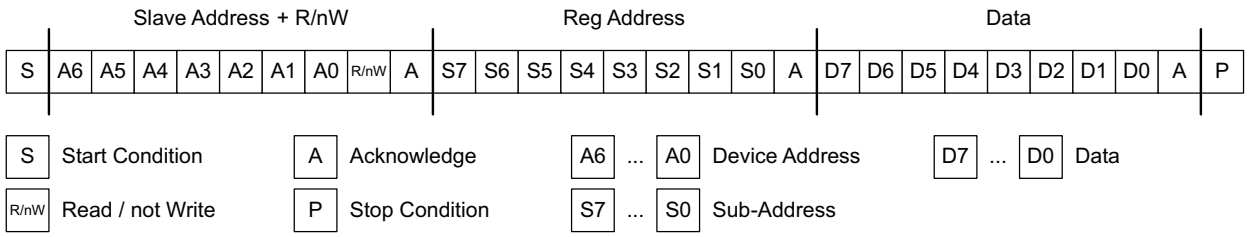

Figure 28. Subaddress in I²C Transmission

The I²C Bus is a communications link between a controller and a series of slave terminals. The link is established using a two-wire bus consisting of a serial clock signal (SCL) and a serial data signal (SDA). The serial clock is sourced from the controller in all cases where the serial data line is bi-directional for data communication between the controller and the slave terminals. Each device has an open drain output to transmit data on the serial data line. An external pull-up resistor must be placed on the serial data line to pull the drain output high during data transmission.

Data transmission is initiated with a start bit from the controller as shown in Figure 30. The start condition is recognized when the SDA line transitions from high to low during the high portion of the SCL signal. Upon reception of a start bit, the device will receive serial data on the SDA input and check for valid address and control information. If the appropriate slave address bits are set for the device, then the device will issue an acknowledge pulse and prepare to receive the register address. Depending on the R/nW bit, the next byte received from the master is written to the addressed register (R/nW = 0) or the device responds with 8-bit data from the register (R/nW = 1). Data transmission is completed by either the reception of a stop condition or the

PRODUCT PREVIEW

Copyright © 2011, Texas Instruments Incorporated

reception of the data word sent to the device. A stop condition is recognized as a low to high transition of the SDA input during the high portion of the SCL signal. All other transitions of the SDA line must occur during the low portion of the SCL signal. An acknowledge is issued after the reception of valid address, sub-address and data words. The I²C interfaces will auto-sequence through register addresses, so that multiple data words can be sent for a given I²C transmission. Reference Figure 29 and Figure 30 for deail.

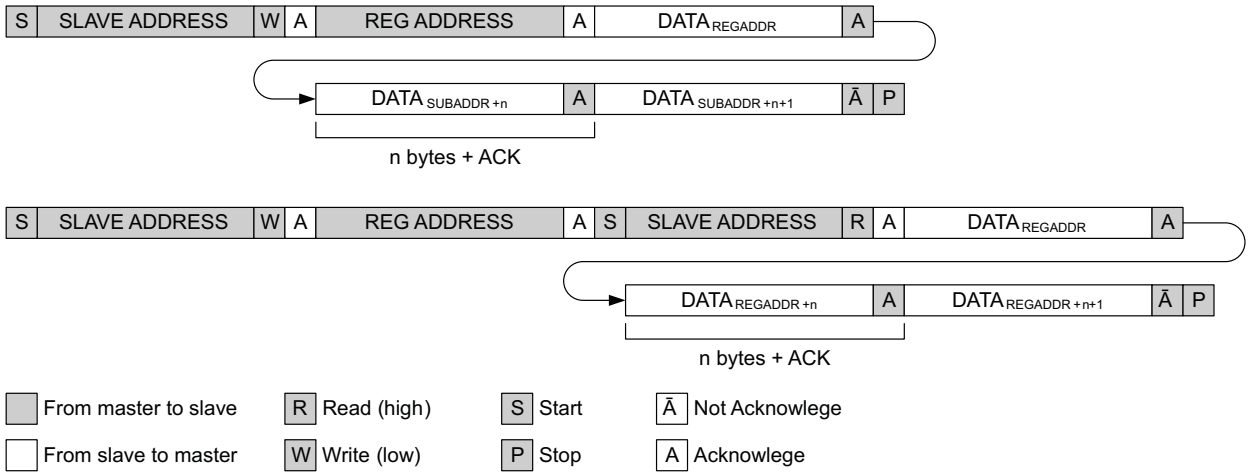

TOP: Master writes data to slave.

BOTTOM: Master reads data from slave.

Figure 29. I²C Data Protocol

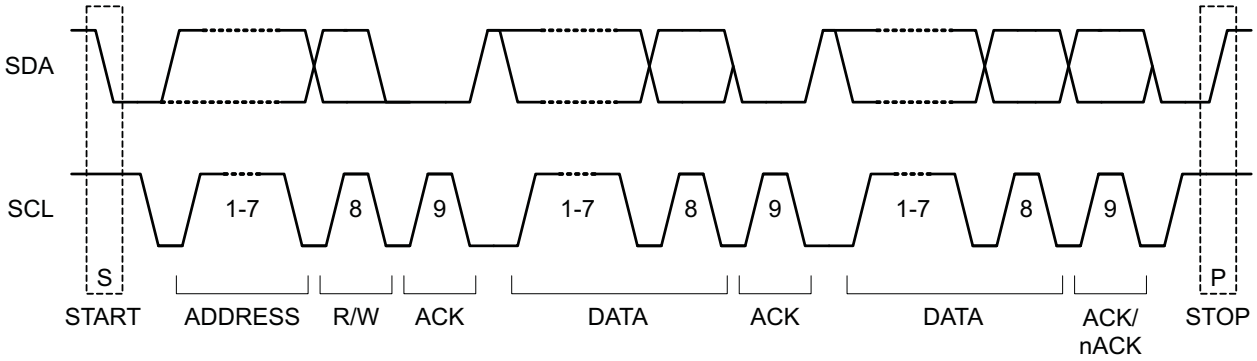

Figure 30. I²C Start/Stop/Acknowledge Protocol

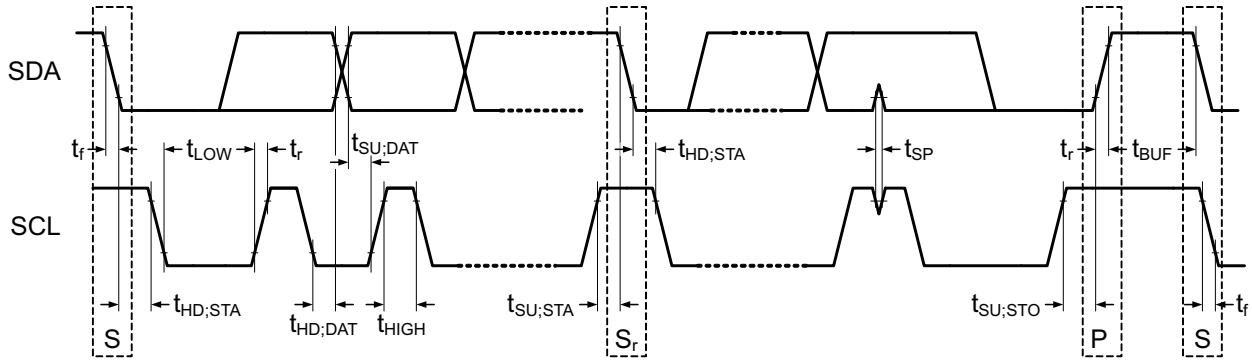

Figure 31. I²C Data Transmission Timing

PRODUCT PREVIEW

DATA TRANSMISSION TIMING

V_{BAT} = 3.6 V ±5%, T_A = 25ºC, C_L = 100 pF (unless otherwise noted)

PARAMETER		TEST CONDITIONS	MIN	TYP	MAX	UNIT
$f_{(SCL)}$	Serial clock frequency		100		400	KHz
$t_{HD;STA}$	Hold time (repeated) START condition. After this period, the first clock pulse is generated.	SCL = 100 KHz	4			µs
		SCL = 400 KHz	600			ns
t_{LOW}	LOW period of the SCL clock	SCL = 100 KHz	4.7			µs
		SCL = 400 KHz	1.3			
t_{HIGH}	HIGH period of the SCL clock	SCL = 100 KHz	4			µs
		SCL = 400 KHz	600			ns
$t_{SU;STA}$	Set-up time for a repeated START condition	SCL = 100 KHz	4.7			µs
		SCL = 400 KHz	600			ns
$t_{HD;DAT}$	Data hold time	SCL = 100 KHz	0		3.45	µs
		SCL = 400 KHz	0		900	ns
$t_{SU;DAT}$	Data set-up time	SCL = 100 KHz	250			ns
		SCL = 400 KHz	100			
t_r	Rise time of both SDA and SCL signals	SCL = 100 KHz			1000	ns
		SCL = 400 KHz			300	
t_f	Fall time of both SDA and SCL signals	SCL = 100 KHz			300	ns
		SCL = 400 KHz			300	
$t_{SU;STO}$	Set-up time for STOP condition	SCL = 100 KHz	4			µs
		SCL = 400 KHz	600			ns
t_{BUF}	Bus Free Time Between Stop and Start Condition	SCL = 100 KHz	4.7			µs
		SCL = 400 KHz	1.3			
t_{SP}	Pulse width of spikes which mst be suppressed by the input filter	SCL = 100 KHz	n/a		n/a	ns
		SCL = 400 KHz	0		50	
C_b	Capacitive load for each bus line	SCL = 100 KHz			400	pF
		SCL = 400 KHz			400	

PRODUCT PREVIEW

Copyright © 2011, Texas Instruments Incorporated

REGISTER ADDRESS MAP

REGISTER	ADDRESS (HEX)	NAME	DEFAULT VALUE	DESCRIPTION
0	0x00	TMST_VALUE	N/A	Thermistor value read by ADC
1	0x01	ENABLE	N/A	Enable/disable bits for regulators
2	0x02	VADJ	N/A	VPOS/VNEG voltage adjustment
3	0x03	VCOM1	N/A	Voltage settings for VCOM
4	0x04	VCOM2	N/A	Voltage settings for VCOM + control
5	0x05	INT_EN1	N/A	Interrupt enable group1
6	0x06	INT_EN2	N/A	Interrupt enable group2
7	0x07	INT1	N/A	Interrupt group1
8	0x08	INT2	N/A	Interrupt group2
9	0x09	UPSEQ0	N/A	Power-up strobe assignment
10	0x0A	UPSEQ1	N/A	Power-up sequence delay times
11	0x0B	DWNSEQ0	N/A	Power-down strobe assignment
12	0x0C	DWNSEQ1	N/A	Power-down sequence delay times
13	0x0D	TMST1	N/A	Thermistor configuration
14	0x0E	TMST2	N/A	Thermistor hot temp set
15	0x0F	PG	N/A	Power good status each rails
16	0x10	REVID	N/A	Device revision ID information

THERMISTOR READOUT (TMST_VALUE)

Address – 0x00h

DATA BIT	D7	D6	D5	D4	D3	D2	D1	D0
FIELD NAME	TMST_VALUE[7:0]							
READ/WRITE	R	R	R	R	R	R	R	R
RESET VALUE	N/A	N/A	N/A	N/A	N/A	N/A	N/A	N/A

FIELD NAME	BIT DEFINITION
TMST_VALUE[7:0]	Temperature read-out 1111 0110 – < -10°C 1111 0110 – -10°C 1111 0111 – -9°C ... 1111 1110 – -2°C 1111 1111 – -1 °C 0000 0000 – 0 °C 0000 0001 – 1°C 0000 0010 – 2°C ... 0001 1001 – 25°C ... 0101 0101 – 85°C 0101 0101 – > 85°C

PRODUCT PREVIEW

Copyright © 2011, Texas Instruments Incorporated

ENABLE (ENABLE)

Address – 0x01h

DATA BIT	D7	D6	D5	D4	D3	D2	D1	D0
FIELD NAME	ACTIVE	STANDBY	V3P3_EN	VCOM_EN	VDDH_EN	VPOS_EN	VEE_EN	VNEG_EN
READ/WRITE	R/W	R/W	R/W	R/W	R/W	R/W	R/W	R/W
RESET VALUE	0	0	0	0	0	0	0	0

FIELD NAME	BIT DEFINITION (1)
ACTIVE	STANDBY to ACTIVE transition bit 1 – Transition from STANDBY to ACTIVE mode. Rails power up as defined by UPSEQx registers 0 – no effect NOTE: After transition bit is cleared automatically
STANDBY	STANDBY to ACTIVE transition bit 1 – Transition from STANDBY to ACTIVE mode. Rails power up as defined by DWNSEQx registers 0 – no effect NOTE: After transition bit is cleared automatically. STANDBY bit has priority over AVTIVE.
V3P3_EN	VIN3P3 to V3P3 switch enable 1 – switch is ON 0 – switch is OFF
VCOM_EN	VCOM buffer enable 1 – enabled 0 – disabled
VDDH_EN	VDDH charge pump enable 1 – enabled 0 – disabled
VPOS_EN	VPOS LDO regulator enable 1 – enabled 0 – disabled NOTE: VPOS cannot be enabled before VNEG is enabled.
VEE_EN	VEE charge pump enable 1 – enabled 0 – disabled
VNEG_EN	VNEG LDO regulator enable 1 – enabled 0 – disabled NOTE: When VNEG is disabled VPOS will also be disabled.

(1) Enable bits always reflect actual status of the corresponding rail.

PRODUCT PREVIEW

Copyright © 2011, Texas Instruments Incorporated

VOLTAGE ADJUSTMENT REGISTER (VADJ)

Address – 0x02h

DATA BIT	D7	D6	D5	D4	D3	D2	D1	D0
FIELD NAME	not used	not used	not used	not used	not used	VSET[2:0]		
READ/WRITE	R/W	R/W	R/W	R/W	R	R/W	R/W	R/W
RESET VALUE	0	0	1	0	0	0^{E2}	1^{E2}	1^{E2}

FIELD NAME	BIT DEFINITION
not used	N/A
not used	N/A
not used	N/A
not used	N/A
not used	N/A
VSET[2:0]	VPOS and VNEG voltage setting 000 - not valid 001 - not valid 010 - not valid 011 - ±15.000 V 100 - ±14.750 V 101 - ±14.500 V 110 - ±14.250 V 111 - reserved

VCOM 1 (VCOM1)

Address – 0x03h

DATA BIT	D7	D6	D5	D4	D3	D2	D1	D0
FIELD NAME	VCOM [7:0]							
READ/WRITE	R/W	R/W	R/W	R/W	R/W	R/W	R/W	R/W
RESET VALUE	0^{E2}	1^{E2}	1^{E2}	1^{E2}	1	1	0	1

FIELD NAME	BIT DEFINITION
VCOM[7:0]	VCOM voltage, least significant byte. See VCOM2 register for details.

PRODUCT PREVIEW

Copyright © 2011, Texas Instruments Incorporated

VCOM 2 (VCOM2)

Address – 0x04h

DATA BIT	D7	D6	D5	D4	D3	D2	D1	D0
FIELD NAME	ACQ	PROG	HiZ	AVG[1:0]		not used	not used	VCOM[8]
READ/WRITE	R/W	R/W	R/W	R/W	R/W	R/W	R/W	R/W
RESET VALUE	0	0	0	0	0	1	0	0[E2]

FIELD NAME	BIT DEFINITION
ACQ	Kick-back voltage acquisition bit 1 – starts kick-back voltage measurement routine 0 – no effect NOTE: After measurement is complete bit is cleared automatically and measurement result is reflected in VCOM[8:0] bits.
PROG	VCOM programming bit 1 – VCOM[8:0] value is committed to non-volatile memory and becomes new power-up default 0 – no effect NOTE: After programming bit is cleared automatically and TPS65185 will enter STANDBY mode.
HiZ	VCOM HiZ bit 1 – VCOM pin is placed into hi-impedance state to allow VCOM measurement 0 – VCOM amplifier is connected to VCOM pin
AVG[1:0]	Number of acquisitions that is averaged to a single kick-back voltage measurement 00 – 1x 01 – 2x 10 – 4x 11 – 8x NOTE: When the ACQ bit is set, the state machine repeat the A/D conversion of the kick-back voltage AVD[1:0] times and returns a single, averaged, value to VCOM[8:0]
not used	N/A
not used	N/A
VCOM[8:0]	VCOM voltage adjustment VCOM = VCOM[8:0] x -10 mV in the range from 0 mV to -5.110 V 0x000h – 0 0000 0000 – -0 mV 0x001h – 0 0000 0001 – -10 mV 0x002h – 0 0000 0010 – -20 mV ... 0x07Dh - 0 0111 1101 - -1250 mV ... 0x1FEh – 1 1111 1110 – -5100 mV 0x1FFh – 1 1111 1111 – -5110 mV

PRODUCT PREVIEW

Copyright © 2011, Texas Instruments Incorporated

INTERRUPT ENABLE 1 (INT_EN1)

Address – 0x05h

DATA BIT	D7	D6	D5	D4	D3	D2	D1	D0
FIELD NAME	DTX_EN	TSD_EN	HOT_EN	TMST_HOT_EN	TMST_COLD_EN	UVLO_EN	ACQC_EN	PRGC_EN
READ/WRITE	R	R/W	R/W	R/W	R/W	R/W	R	R
RESET VALUE	0	1	1	1	1	1	1	1

FIELD NAME	BIT DEFINITION(1)
DTX_EN	Panel temperature-change interrupt enable 1 – enabled 0 – disabled
TSD_EN	Thermal shutdown interrupt enable 1 – enabled 0 – disabled
HOT_EN	Thermal shutdown early warning enable 1 – enabled 0 – disabled
TMST_HOT_EN	Thermistor hot interrupt enable 1 – enabled 0 – disabled
TMST_COLD_EN	Thermistor cold interrupt enable 1 – enabled 0 – disabled
UVLO_EN	VIN under voltage detect interrupt enable 1 – enabled 0 – disabled
ACQC_EN	VCOM acquisition complete interrupt enable 1 – enabled 0 – disabled
PRGC_EN	VCOM programming complete interrupt enable 1 – enabled 0 – disabled

(1) Enabled means nINT pin is pulled low when interrupt occurs.
Disabled means nINT pin is not pulled low when interrupt occurs.

PRODUCT PREVIEW

Copyright © 2011, Texas Instruments Incorporated

INTERRUPT ENABLE 2 (INT_EN2)

Address – 0x06h

DATA BIT	D7	D6	D5	D4	D3	D2	D1	D0
FIELD NAME	VBUVEN	VDDHUVEN	VNUV_EN	VPOSUVEN	VEEUVEN	VCOMFEN	VNEGUVEN	EOCEN
READ/WRITE	R/W	R/W	R/W	R/W	R/W	R/W	R/W	R/W
RESET VALUE	1	1	1	1	1	1	1	1

FIELD NAME	BIT DEFINITION(1)
VBUVEN	Positive boost converter under voltage detect interrupt enable 1 – enabled 0 – disabled
VDDHUVEN	VDDH under voltage detect interrupt enable 1 – enabled 0 – disabled
VNUVEN	Inverting buck-boost converter under voltage detect interrupt enable 1 – enabled 0 – disabled
VPOSUVEN	VPOS under voltage detect interrupt enable 1 – enabled 0 – disabled
VEEUVEN	VEE under Voltage detect interrupt enable 1 – enabled 0 – disabled
VCOMFEN	VCOM FAULT interrupt enable 1 – enabled 0 – disabled
VNEGUVEN	VNEG under Voltage detect interrupt enable 1 – enabled 0 – disabled
EOCEN	Temperature ADC end of conversion interrupt enable 1 – enabled 0 – disabled

(1) Enabled means nINT pin is pulled low when interrupt occurs.
Disabled means nINT pin is not pulled low when interrupt occurs.

PRODUCT PREVIEW

Copyright © 2011, Texas Instruments Incorporated

INTERRUPT 1 (INT1)

Address – 0x07h

DATA BIT	D7	D6	D5	D4	D3	D2	D1	D0
FIELD NAME	DTX	TSD	HOT	TMST_HOT	TMST_COLD	UVLO	ACQC	PRGC
READ/WRITE	R	R	R	R	R	R	R	R
RESET VALUE	0	N/A	N/A	N/A	N/A	N/A	0	0

FIELD NAME	BIT DEFINITION
DTX	Panel temperature-change interrupt 1 – temperature has changed by 3 deg or more over previous reading 0 – no significance
TSD	Thermal shutdown interrupt 1 – chip is in over-temperature shutdown 0 – no fault
HOT	Thermal shutdown early warning 1 – chip is approaching over-temperature shutdown 0 – no fault
TMST_HOT	Thermistor hot interrupt 1 – thermistor temperature is equal or greater than TMST_HOT threshold 0 – no fault
TMST_COLD	Thermistor cold interrupt 1 – thermistor temperature is equal or less than TMST_COLD threshold 0 – no fault
UVLO	VIN under voltage detect interrupt 1 – input voltage is below UVLO threshold 0 – no fault
ACQC	VCOM acquisition complete 1 – VCOM measurement is compete 0 – no significance
PRGC	VCOM programming complete 1 – VCOM programming is complete 0 – no significance

PRODUCT PREVIEW

Copyright © 2011, Texas Instruments Incorporated

INTERRUPT 2 (INT2)

Address – 0x08h

DATA BIT	D7	D6	D5	D4	D3	D2	D1	D0
FIELD NAME	VB_UV	VDDH_UV	VN_UV	VPOS_UV	VEE_UV	VCOMF	VNEG_UV	EOC
READ/WRITE	R	R	R	R	R	R	R	R
RESET VALUE	N/A	N/A	N/A	N/A	N/A	N/A	N/A	N/A

FIELD NAME	BIT DEFINITION
VB_UV	Positive boost converter under voltage detect interrupt 1 – under-voltage on DCDC1 detected 0 – no fault
VDDH_UV	VDDH under voltage detect interrupt 1 – under-voltage on VDDH charge pump detected 0 – no fault
VN_UV	Inverting buck-boost converter under voltage detect interrupt 1 – under-voltage on DCDC2 detected 0 – no fault
VPOS_UV	VPOS under voltage detect interrupt 1 – under-voltage on LDO1(VPOS) detected 0 – no fault
VEE_UV	VEE under Voltage detect interrupt 1 – under-voltage on VEE charge pump detected 0 – no fault
VCOMF	VCOM fault detection 1 – fault on VCOM detected (VCOM is outside normal operating range) 0 – no fault
VNEG_UV	VNEG under Voltage detect interrupt 1 – under-voltage on LDO2(VNEG) detected 0 – no fault
EOC	ADC end of conversion interrupt 1 – ADC conversion is complete (temperature acquisition is complete) 0 – no significance

PRODUCT PREVIEW

Copyright © 2011, Texas Instruments Incorporated

POWER UP SEQUENCE REGISTER 0 (UPSEQ0)

Address – 0x09h

DATA BIT	D7	D6	D5	D4	D3	D2	D1	D0
FIELD NAME	VDDH_UP[1:0]		VPOS_UP[1:0]		VEE_UP[1:0]		VNEG_UP[1:0]	
READ/WRITE	R/W	R/W	R/W	R/W	R/W	R/W	R/W	R/W
RESET VALUE	1^{E2}	1^{E2}	1^{E2}	0^{E2}	0^{E2}	1^{E2}	0^{E2}	0^{E2}

FIELD NAME	BIT DEFINITION
VDDH_UP[1:0]	VDDH power-up order 00 – power up on STROBE1 01 – power up on STROBE2 10 – power up on STROBE3 11 – power up on STROBE4
VPOS_UP[1:0]	VPOS power-up order 00 – power up on STROBE1 01 – power up on STROBE2 10 – power up on STROBE3 11 – power up on STROBE4
VEE_UP[1:0]	VEE power-up order 00 – power up on STROBE1 01 – power up on STROBE2 10 – power up on STROBE3 11 – power up on STROBE4
VNEG_UP[1:0]	VNEG power-up order 00 – power up on STROBE1 01 – power up on STROBE2 10 – power up on STROBE3 11 – power up on STROBE4

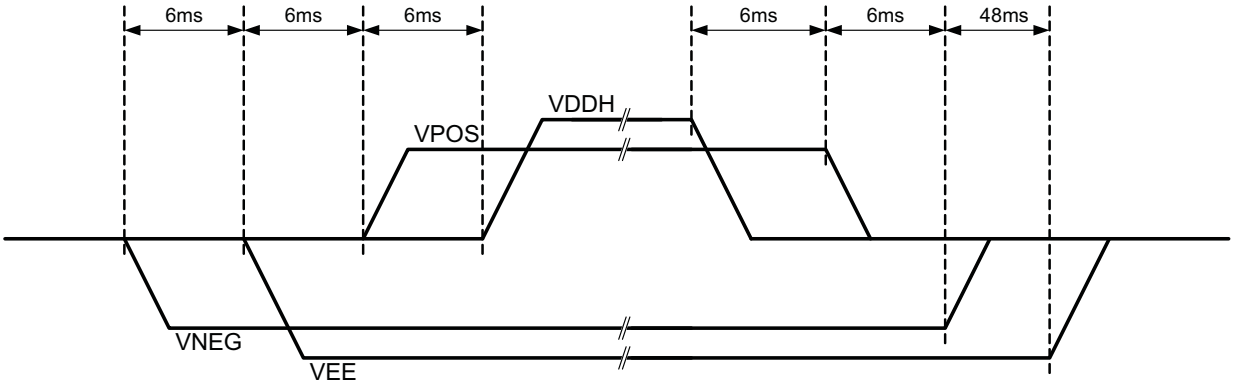

Figure 32. Default Power-Up/Down Sequence

PRODUCT PREVIEW

Copyright © 2011, Texas Instruments Incorporated

POWER UP SEQUENCE REGISTER 1 (UPSEQ1)

Address – 0x0Ah

DATA BIT	D7	D6	D5	D4	D3	D2	D1	D0
FIELD NAME	UDLY4[1:0]		UDLY3[1:0]		UDLY2[1:0]		UDLY1[1:0]	
READ/WRITE	R/W	R/W	R/W	R/W	R/W	R/W	R/W	R/W
RESET VALUE	0^{E2}	1^{E2}	0^{E2}	1^{E2}	0^{E2}	1^{E2}	0^{E2}	1^{E2}

FIELD NAME	BIT DEFINITION
UDLY4[1:0]	DLY4 delay time set; defines the delay time from STROBE3 to STROBE4 during power-up. 00 – 3 ms 01 – 6 ms 10 – 9 ms 11 – 12 ms
UDLY3[1:0]	DLY3 delay time set; defines the delay time from STROBE2 to STROBE3 during power-up. 00 – 3 ms 01 – 6 ms 10 – 9 ms 11 – 12 ms
UDLY2[1:0]	DLY2 delay time set; defines the delay time from STROBE1 to STROBE2 during power-up. 00 – 3 ms 01 – 6 ms 10 – 9 ms 11 – 12 ms
UDLY1[1:0]	DLY1 delay time set; defines the delay time from VN_PG high to STROBE1 during power-up. 00 – 3 ms 01 – 6 ms 10 – 9 ms 11 – 12 ms

PRODUCT PREVIEW

Copyright © 2011, Texas Instruments Incorporated

POWER DOWN SEQUENCE REGISTER 0 (DWNSEQ0)

Address – 0x0Bh

DATA BIT	D7	D6	D5	D4	D3	D2	D1	D0
FIELD NAME	VDDH_DWN[1:0]		VPOS_DWN[1:0]		VEE_DWN[1:0]		VNEG_DWN[1:0]	
READ/WRITE	R/W	R/W	R/W	R/W	R/W	R/W	R/W	R/W
RESET VALUE	0^{E2}	0^{E2}	0^{E2}	1^{E2}	1^{E2}	1^{E2}	1^{E2}	0^{E2}

FIELD NAME	BIT DEFINITION
VDDH_DWN[1:0]	VDDH power-down order 00 – power down on STROBE1 01 – power down on STROBE2 10 – power down on STROBE3 11 – power down on STROBE4
VPOS_DWN[1:0]	VPOS power-down order 00 – power down on STROBE1 01 – power down on STROBE2 10 – power down on STROBE3 11 – power down on STROBE4
VEE_DWN[1:0]	VEE power-down order 00 – power down on STROBE1 01 – power down on STROBE2 10 – power down on STROBE3 11 – power down on STROBE4
VNEG_DWN[1:0]	VNEG power-down order 00 – power down on STROBE1 01 – power down on STROBE2 10 – power down on STROBE3 11 – power down on STROBE4

PRODUCT PREVIEW

Copyright © 2011, Texas Instruments Incorporated

POWER DOWN SEQUENCE REGISTER 1 (DWNSEQ1)

Address – 0x0Ch

DATA BIT	D7	D6	D5	D4	D3	D2	D1	D0
FIELD NAME	DDLY4[1:0]		DDLY3[1:0]		DDLY2[1:0]		DDLY1	DFCTR
READ/WRITE	R/W	R/W	R/W	R/W	R/W	R/W	R/W	R/W
RESET VALUE	1^{E2}	1^{E2}	1^{E2}	0^{E2}	0^{E2}	0^{E2}	0^{E2}	0^{E2}

FIELD NAME	BIT DEFINITION
DDLY4[1:0]	DLY4 delay time set; defines the delay time from STROBE3 to STROBE4 during power-down. 00 – 6 ms 01 – 12 ms 10 – 24 ms 11 – 48 ms
DDLY3[1:0]	DLY3 delay time set; defines the delay time from STROBE2 to STROBE3 during power-down. 00 – 6 ms 01 – 12 ms 10 – 24 ms 11 – 4 8ms
DDLY2[1:0]	DLY2 delay time set; defines the delay time from STROBE1 to STROBE2 during power-down. 00 – 6 ms 01 – 12 ms 10 – 24 ms 11 – 48 ms
DDLY1	DLY2 delay time set; defines the delay time from WAKEUP low to STROBE1 during power-down. 0 – 3 ms 1 – 6 ms
DFCTR	At power-down delay time DLY2[1:0], DLY3[1:0], DLY4[1:0] are multiplied with DFCTR[1:0] 0 – 1x 1 – 16x

PRODUCT PREVIEW

Copyright © 2011, Texas Instruments Incorporated

THERMISTOR REGISTER 1 (TMST1)

Address – 0x0Dh

DATA BIT	D7	D6	D5	D4	D3	D2	D1	D0
FIELD NAME	READ_THERM	not used	CONV_END	not used	not used	not used	DT[1:0]	
READ/WRITE	R/W	R/W	R	R/W	R/W	R/W	R/W	R/W
RESET VALUE	0	0	1	0	0	0	0	0

FIELD NAME	BIT DEFINITION
READ_THERM	Read thermistor value 1 – initiates temperature acquisition 0 – no effect NOTE: Bit is self-cleared after acquisition is completed
not used	N/A
CONV_END	ADC conversion done flag 1 – conversion is finished 0 – conversion is not finished
not used	N/A
not used	N/A
DT[1:0]	Panel temperature-change interrupt threshold 00 – 2°C 01 – 3°C 10 – 4°C 11 – 5°C DTX interrupt is issued when difference between most recent temperature reading and baseline temperature is equal to or greater than threshold value. See “HOT, COLD, and temperature-change interrupts” section for details.

PRODUCT PREVIEW

Copyright © 2011, Texas Instruments Incorporated

THERMISTOR REGISTER 2 (TMST2)

Address – 0x0Eh

DATA BIT	D7	D6	D5	D4	D3	D2	D1	D0
FIELD NAME	TMST_COLD[3:0]				TMST_HOT[3:0]			
READ/WRITE	R/W	R/W	R/W	R/W	R/W	R/W	R/W	R/W
RESET VALUE	0	1	1	1	1	0	0	0

FIELD NAME	BIT DEFINITION
TMST_COLD [3:0]	Thermistor COLD threshold 0000 – -7°C 0001 – -6°C 0010 – -5°C 0011 – -4°C 0100 – -3°C 0101 – -2°C 0110 – -1°C 0111 – 0°C 1000 – 1°C 1001 – 2°C 1010 – 3°C 1011 – 4°C 1100 – 5°C 1101 – 6°C 1110 – 7°C 1111 – 8°C NOTE: An interrupt is issued when thermistor temperature is equal or less than COLD threshold
TMST_HOT [3:0]	Thermistor HOT threshold 0000 – 42°C 0001 – 43°C 0010 – 44°C 0011 – 45°C 0100 – 46°C 0101 – 47°C 0110 – 48°C 0111 – 49°C 1000 – 50°C 1001 – 51°C 1010 – 52°C 1011 – 53°C 1100 – 54°C 1101 – 55°C 1110 – 56°C 1111 – 57°C NOTE: An interrupt is issued when thermistor temperature is equal or greater than HOT threshold

PRODUCT PREVIEW

Copyright © 2011, Texas Instruments Incorporated

POWER GOOD STATUS (PG)

Address – 0x0Fh

DATA BIT	D7	D6	D5	D4	D3	D2	D1	D0
FIELD NAME	VB_PG	VDDH_PG	VN_PG	VPOS_PG	VEE_PG	not used	VNEG_PG	not used
READ/WRITE	R	R	R	R	R	R	R	R
RESET VALUE	0	0	0	0	0	0	0	0

FIELD NAME	BIT DEFINITION (1)
VB_PG	Positive boost converter power good 1 – DCDC1 is in regulation 0 – DCDC1 is not in regulation or turned off
VDDH_PG	VDDH power good 1 – VDDH charge pump is in regulation 0 – VDDH charge pump is not in regulation or turned off
VN_PG	Inverting buck-boost power good 1 – DCDC2 is in regulation 0 – DCDC2 is not in regulation or turned off
VPOS_PG	VPOS power good 1 – LDO1(VPOS) is in regulation 0 – LDO1(VPOS) is not in regulation or turned off
VEE_PG	VEE power good 1 – VEE charge pump is in regulation 0 – VEE charge pump is not in regulation or turned off
not used	N/A
VNEG_PG	VNEG power good 1 – LDO2(VNEG) is in regulation 0 – LDO2(VNEG) is not in regulation or turned off
not used	N/A

(1) PG pin is pulled hi (HiZ state) when VDDH_PG = VPOS_PG = VEE_PG = VNEG_PG = 1

REVISION AND VERSION CONTROL (REVID)

Address – 0x10h

DATA BIT	D7	D6	D5	D4	D3	D2	D1	D0
FIELD NAME	REVID[7:0]							
READ/WRITE	R	R	R	R	R	R	R	R
RESET VALUE	0	1	0	0	0^{E2}	1^{E2}	0^{E2}	1^{E2}

FIELD NAME	BIT DEFINITION
REVID[7:6]	MJREV
REVID[5:4]	MNREV
REVID[3:0]	VERSION
REVID [7:0]	0100 0101 - TPS65185 1p0 0101 0101 – TPS65185 1p1 0110 0101 – TPS65185 1p2

PRODUCT PREVIEW

Copyright © 2011, Texas Instruments Incorporated

PACKAGING INFORMATION

Orderable Device	Status (1)	Package Type	Package Drawing	Pins	Package Qty	Eco Plan (2)	Lead/ Ball Finish	MSL Peak Temp (3)	Samples (Requires Login)
TPS65185RGZR	ACTIVE	VQFN	RGZ	48	2500	Green (RoHS & no Sb/Br)	CU NIPDAU	Level-3-260C-168 HR	
TPS65185RGZT	ACTIVE	VQFN	RGZ	48	250	Green (RoHS & no Sb/Br)	CU NIPDAU	Level-3-260C-168 HR	

(1) The marketing status values are defined as follows:
ACTIVE: Product device recommended for new designs.
LIFEBUY: TI has announced that the device will be discontinued, and a lifetime-buy period is in effect.
NRND: Not recommended for new designs. Device is in production to support existing customers, but TI does not recommend using this part in a new design.
PREVIEW: Device has been announced but is not in production. Samples may or may not be available.
OBSOLETE: TI has discontinued the production of the device.

(2) Eco Plan - The planned eco-friendly classification: Pb-Free (RoHS), Pb-Free (RoHS Exempt), or Green (RoHS & no Sb/Br) - please check http://www.ti.com/productcontent for the latest availability information and additional product content details.
TBD: The Pb-Free/Green conversion plan has not been defined.
Pb-Free (RoHS): TI's terms "Lead-Free" or "Pb-Free" mean semiconductor products that are compatible with the current RoHS requirements for all 6 substances, including the requirement that lead not exceed 0.1% by weight in homogeneous materials. Where designed to be soldered at high temperatures, TI Pb-Free products are suitable for use in specified lead-free processes.
Pb-Free (RoHS Exempt): This component has a RoHS exemption for either 1) lead-based flip-chip solder bumps used between the die and package, or 2) lead-based die adhesive used between the die and leadframe. The component is otherwise considered Pb-Free (RoHS compatible) as defined above.
Green (RoHS & no Sb/Br): TI defines "Green" to mean Pb-Free (RoHS compatible), and free of Bromine (Br) and Antimony (Sb) based flame retardants (Br or Sb do not exceed 0.1% by weight in homogeneous material)

(3) MSL, Peak Temp. -- The Moisture Sensitivity Level rating according to the JEDEC industry standard classifications, and peak solder temperature.

Important Information and Disclaimer: The information provided on this page represents TI's knowledge and belief as of the date that it is provided. TI bases its knowledge and belief on information provided by third parties, and makes no representation or warranty as to the accuracy of such information. Efforts are underway to better integrate information from third parties. TI has taken and continues to take reasonable steps to provide representative and accurate information but may not have conducted destructive testing or chemical analysis on incoming materials and chemicals. TI and TI suppliers consider certain information to be proprietary, and thus CAS numbers and other limited information may not be available for release.

In no event shall TI's liability arising out of such information exceed the total purchase price of the TI part(s) at issue in this document sold by TI to Customer on an annual basis.

TAPE AND REEL INFORMATION

REEL DIMENSIONS

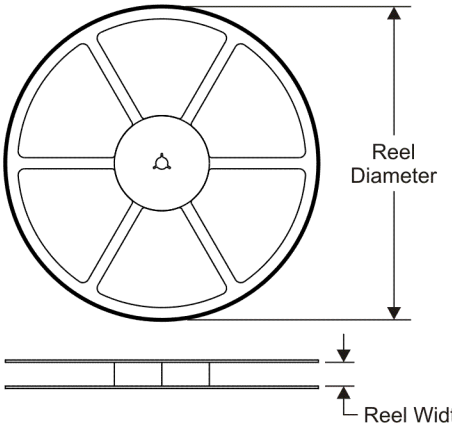

TAPE DIMENSIONS

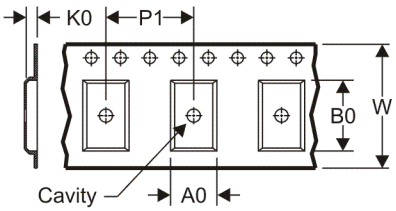

A0	Dimension designed to accommodate the component width
B0	Dimension designed to accommodate the component length
K0	Dimension designed to accommodate the component thickness
W	Overall width of the carrier tape
P1	Pitch between successive cavity centers

QUADRANT ASSIGNMENTS FOR PIN 1 ORIENTATION IN TAPE

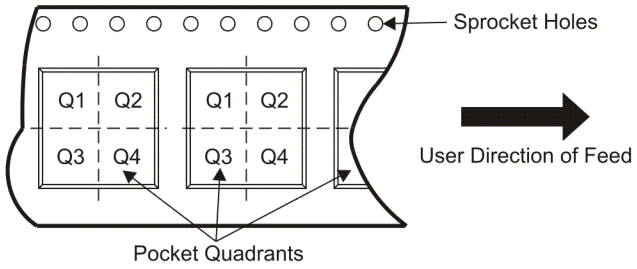

*All dimensions are nominal

Device	Package Type	Package Drawing	Pins	SPQ	Reel Diameter (mm)	Reel Width W1 (mm)	A0 (mm)	B0 (mm)	K0 (mm)	P1 (mm)	W (mm)	Pin1 Quadrant
TPS65185RGZR	VQFN	RGZ	48	2500	330.0	16.4	7.3	7.3	1.5	12.0	16.0	Q2

TAPE AND REEL BOX DIMENSIONS

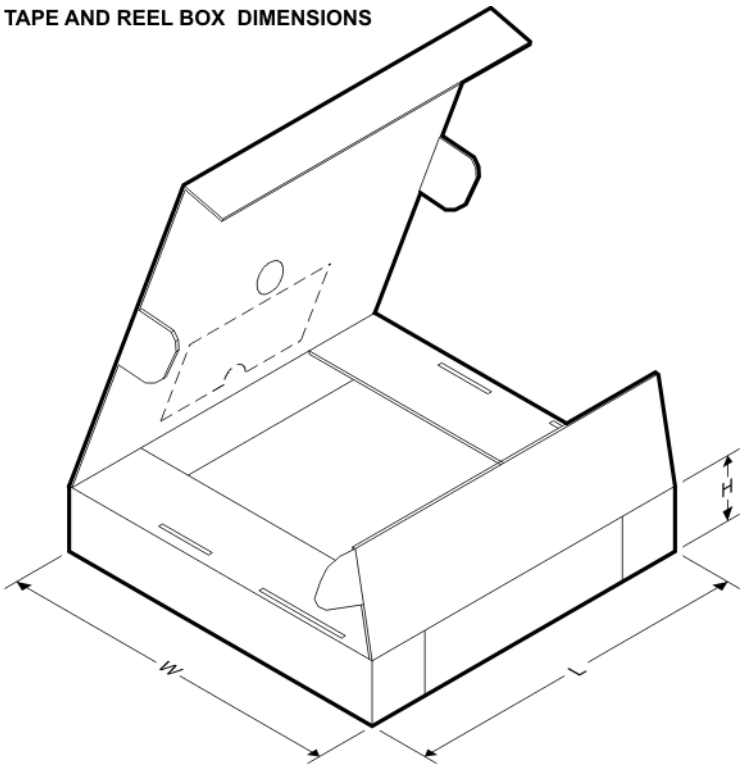

*All dimensions are nominal

Device	Package Type	Package Drawing	Pins	SPQ	Length (mm)	Width (mm)	Height (mm)
TPS65185RGZR	VQFN	RGZ	48	2500	346.0	346.0	33.0

RGZ (S–PVQFN–N48) PLASTIC QUAD FLATPACK NO–LEAD

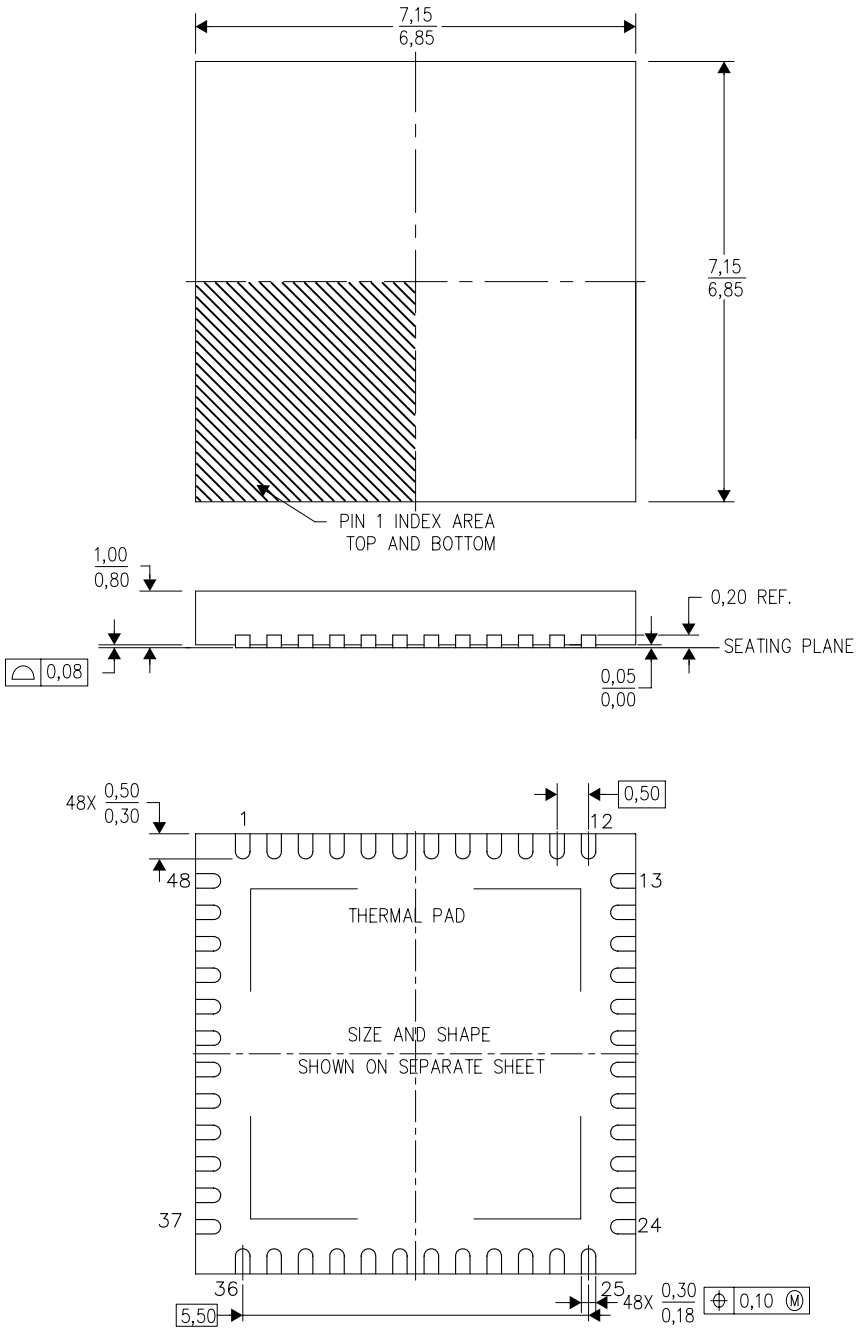

NOTES:
A. All linear dimensions are in millimeters. Dimensioning and tolerancing per ASME Y14.5M–1994.
B. This drawing is subject to change without notice.
C. Quad Flatpack, No–leads (QFN) package configuration.
D. The package thermal pad must be soldered to the board for thermal and mechanical performance.
E. See the additional figure in the Product Data Sheet for details regarding the exposed thermal pad features and dimensions.
F. Falls within JEDEC MO–220.

RGZ (S–PVQFN–N48) PLASTIC QUAD FLATPACK NO–LEAD

THERMAL INFORMATION

This package incorporates an exposed thermal pad that is designed to be attached directly to an external heatsink. The thermal pad must be soldered directly to the printed circuit board (PCB). After soldering, the PCB can be used as a heatsink. In addition, through the use of thermal vias, the thermal pad can be attached directly to the appropriate copper plane shown in the electrical schematic for the device, or alternatively, can be attached to a special heatsink structure designed into the PCB. This design optimizes the heat transfer from the integrated circuit (IC).

For information on the Quad Flatpack No–Lead (QFN) package and its advantages, refer to Application Report, QFN/SON PCB Attachment, Texas Instruments Literature No. SLUA271. This document is available at www.ti.com.

The exposed thermal pad dimensions for this package are shown in the following illustration.

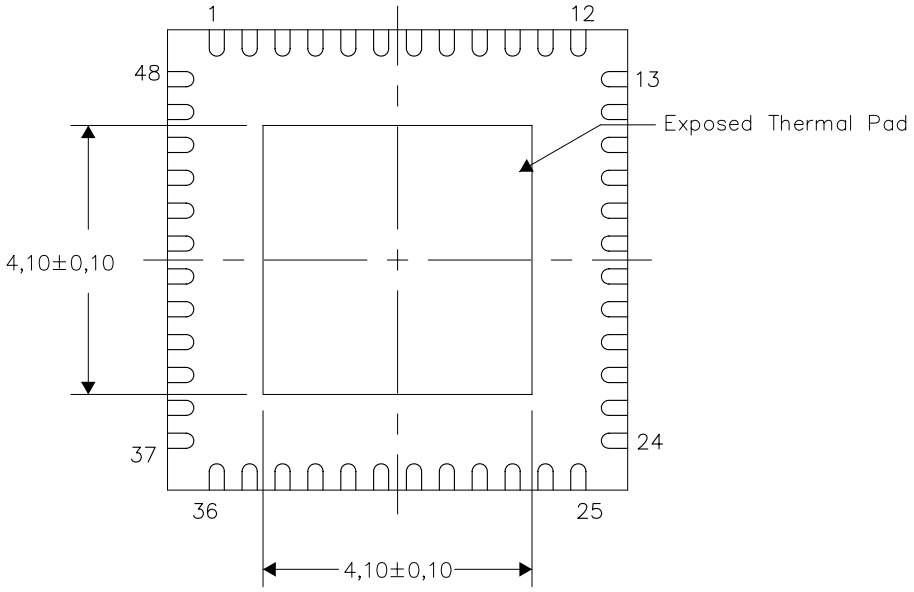

Bottom View

Exposed Thermal Pad Dimensions

4206354–3/Q 06/11

NOTE: All linear dimensions are in millimeters

RGZ (S–PVQFN–N48) PLASTIC QUAD FLATPACK NO–LEAD

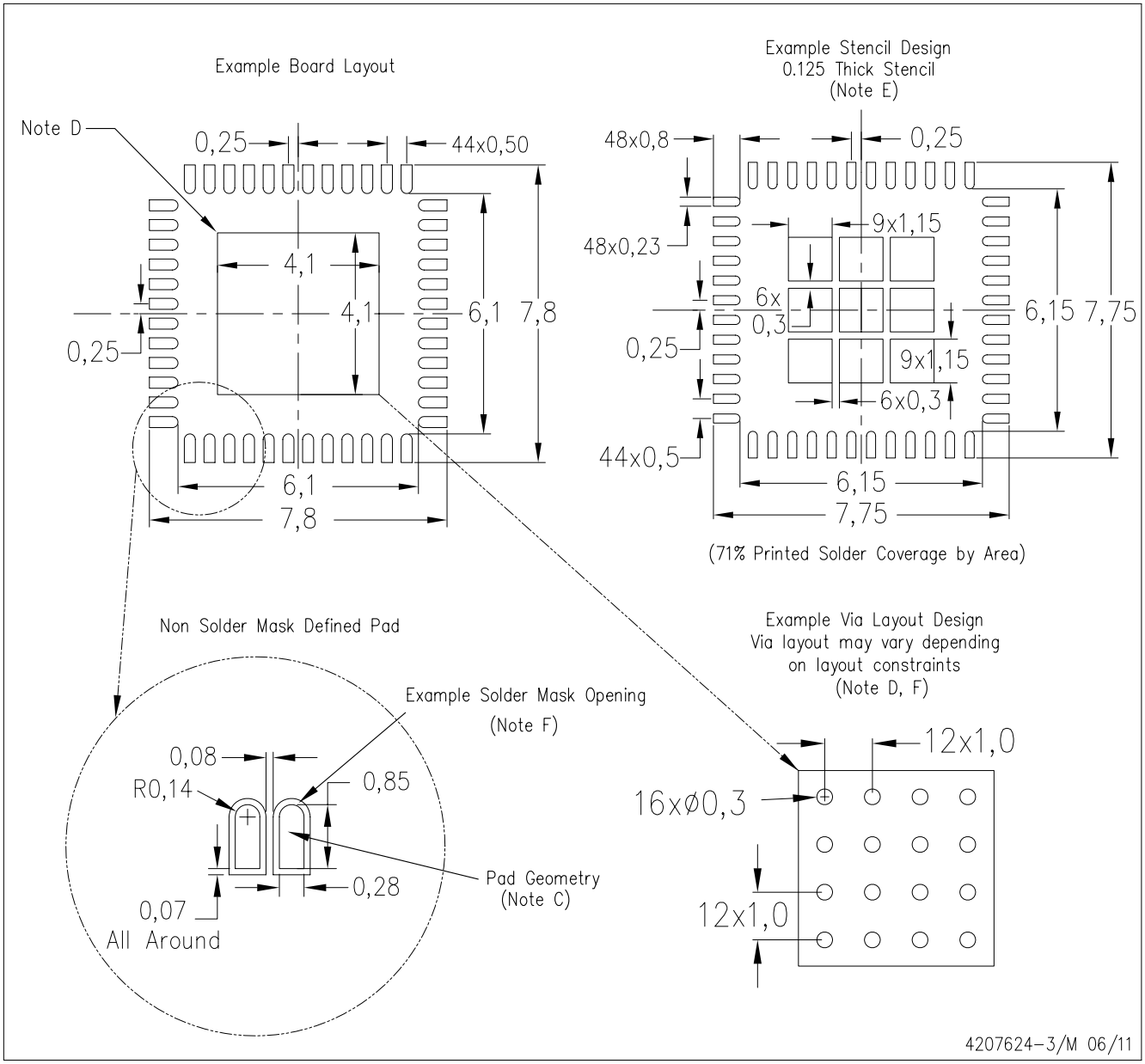

NOTES:
A. All linear dimensions are in millimeters.
B. This drawing is subject to change without notice.
C. Publication IPC–7351 is recommended for alternate designs.
D. This package is designed to be soldered to a thermal pad on the board. Refer to Application Note, Quad Flat–Pack Packages, Texas Instruments Literature No. SLUA271, and also the Product Data Sheets for specific thermal information, via requirements, and recommended board layout. These documents are available at www.ti.com <http: //www.ti.com>.
E. Laser cutting apertures with trapezoidal walls and also rounding corners will offer better paste release. Customers should contact their board assembly site for stencil design recommendations. Refer to IPC 7525 for stencil design considerations.
F. Customers should contact their board fabrication site for recommended solder mask tolerances and via tenting recommendations for vias placed in the thermal pad.

IMPORTANT NOTICE

Texas Instruments Incorporated and its subsidiaries (TI) reserve the right to make corrections, modifications, enhancements, improvements, and other changes to its products and services at any time and to discontinue any product or service without notice. Customers should obtain the latest relevant information before placing orders and should verify that such information is current and complete. All products are sold subject to TI's terms and conditions of sale supplied at the time of order acknowledgment.

TI warrants performance of its hardware products to the specifications applicable at the time of sale in accordance with TI's standard warranty. Testing and other quality control techniques are used to the extent TI deems necessary to support this warranty. Except where mandated by government requirements, testing of all parameters of each product is not necessarily performed.

TI assumes no liability for applications assistance or customer product design. Customers are responsible for their products and applications using TI components. To minimize the risks associated with customer products and applications, customers should provide adequate design and operating safeguards.

TI does not warrant or represent that any license, either express or implied, is granted under any TI patent right, copyright, mask work right, or other TI intellectual property right relating to any combination, machine, or process in which TI products or services are used. Information published by TI regarding third-party products or services does not constitute a license from TI to use such products or services or a warranty or endorsement thereof. Use of such information may require a license from a third party under the patents or other intellectual property of the third party, or a license from TI under the patents or other intellectual property of TI.

Reproduction of TI information in TI data books or data sheets is permissible only if reproduction is without alteration and is accompanied by all associated warranties, conditions, limitations, and notices. Reproduction of this information with alteration is an unfair and deceptive business practice. TI is not responsible or liable for such altered documentation. Information of third parties may be subject to additional restrictions.

Resale of TI products or services with statements different from or beyond the parameters stated by TI for that product or service voids all express and any implied warranties for the associated TI product or service and is an unfair and deceptive business practice. TI is not responsible or liable for any such statements.

TI products are not authorized for use in safety-critical applications (such as life support) where a failure of the TI product would reasonably be expected to cause severe personal injury or death, unless officers of the parties have executed an agreement specifically governing such use. Buyers represent that they have all necessary expertise in the safety and regulatory ramifications of their applications, and acknowledge and agree that they are solely responsible for all legal, regulatory and safety-related requirements concerning their products and any use of TI products in such safety-critical applications, notwithstanding any applications-related information or support that may be provided by TI. Further, Buyers must fully indemnify TI and its representatives against any damages arising out of the use of TI products in such safety-critical applications.

TI products are neither designed nor intended for use in military/aerospace applications or environments unless the TI products are specifically designated by TI as military-grade or "enhanced plastic." Only products designated by TI as military-grade meet military specifications. Buyers acknowledge and agree that any such use of TI products which TI has not designated as military-grade is solely at the Buyer's risk, and that they are solely responsible for compliance with all legal and regulatory requirements in connection with such use.

TI products are neither designed nor intended for use in automotive applications or environments unless the specific TI products are designated by TI as compliant with ISO/TS 16949 requirements. Buyers acknowledge and agree that, if they use any non-designated products in automotive applications, TI will not be responsible for any failure to meet such requirements.

Following are URLs where you can obtain information on other Texas Instruments products and application solutions:

Products		**Applications**	
Audio	www.ti.com/audio	Communications and Telecom	www.ti.com/communications
Amplifiers	amplifier.ti.com	Computers and Peripherals	www.ti.com/computers
Data Converters	dataconverter.ti.com	Consumer Electronics	www.ti.com/consumer-apps
DLP® Products	www.dlp.com	Energy and Lighting	www.ti.com/energy
DSP	dsp.ti.com	Industrial	www.ti.com/industrial
Clocks and Timers	www.ti.com/clocks	Medical	www.ti.com/medical
Interface	interface.ti.com	Security	www.ti.com/security
Logic	logic.ti.com	Space, Avionics and Defense	www.ti.com/space-avionics-defense
Power Mgmt	power.ti.com	Transportation and Automotive	www.ti.com/automotive
Microcontrollers	microcontroller.ti.com	Video and Imaging	www.ti.com/video
RFID	www.ti-rfid.com	Wireless	www.ti.com/wireless-apps
RF/IF and ZigBee® Solutions	www.ti.com/lprf		
	TI E2E Community Home Page		e2e.ti.com

Mailing Address: Texas Instruments, Post Office Box 655303, Dallas, Texas 75265
Copyright © 2011, Texas Instruments Incorporated