User's Guide
SLVU244–June 2008

TPS65136EVM-265

This user's guide describes the characteristics, operation, and use of the TPS65136EVM evaluation module (EVM). This EVM contains the Texas Instruments TPS65136 positive and negative output supply integrated circuit. This user's guide includes EVM specifications, recommended test setup, bill of materials, a schematic diagram, and the board layout.

Contents

1 Introduction 2
2 Input/Output Connector Descriptions 2
3 Bill of Materials and Schematic 3
4 Board Layout 4

List of Figures

1 TPS65136EVM Schematic 3
2 Top Assembly Layer 4
3 Top Layer 4
4 Bottom Layer 5

List of Tables

1 Typical Performance Specification Summary 2
2 HPA265 Bill of Materials 3

1 Introduction

The Texas Instruments TPS65136EVM evaluation module uses a TPS65136 single-inductor, multiple output regulator to provide both a positive and negative power rail. The goal of the EVM is to facilitate evaluation of the TPS65136.

1.1 Performance Specification Summary

Table 1 provides a summary of the TPS65136EVM performance specifications. All specifications are given for an ambient temperature of 25°C.

Table 1. Typical Performance Specification Summary

	CONDITION	VOLTAGE RANGE (V)			CURRENT RANGE (mA)		
		MIN	TYP	MAX	MIN	TYP	MAX
VIN		2.3		5.5			1000
VPOS	V_I = 3.7 V	4.55	4.6	4.56	80		
VNEG	V_I = 3.7 V	-5.1	-5	-4.9	80		

2 Input/Output Connector Descriptions

J1–VIN and GND This is the positive and return connections (three pins each) to the input power supply. Twist the leads to the input supply and keep them as short as possible.

J2–OUTP and GND This is the positive output of the device and some GND pins (two pins each).

J3–EN This is the enable pin for both converters. Placing a jumper across pins 1 and 2 shorts the EN pin to GND (OFF), thereby disabling the device. Placing a jumper across pins 2 and 3 shorts the EN pin to VIN (ON), thereby enabling the converter.

J4–OUTN and GND This is the negative output of the device and some GND pins (two pins each). The load in most applications is connected between OUTP and OUTIN, not to GND.

3 Bill of Materials and Schematic

3.1 Bill of Materials

Table 2. HPA265 Bill of Materials

COUNT	Ref Des	Value	DESCRIPTION	SIZE	Part Number	MFR
1	C1	10 µF	Capacitor, Ceramic, 10V, X7R, 10%	0805	STD	Murata
2	C2, C3	4.7 µF	Capacitor, Ceramic, 10V, X7R, 10%	0805	STD	Murata
1	C4	100 nF	Capacitor, Ceramic, 10V, X7R	0603	STD	Murata
1	J1	PTC36SAAN	Header, Male 6-pin, 100mil spacing, (36-pin strip)	0.100 inch × 6	PTC36SAAN	Sullins
1	J2, J4	PTC36SAAN	Header, Male 4 pin, 100mil spacing, (36-pin strip)	0.100 inch × 4	PTC36SAAN	Sullins
1	J3	PTC36SAAN	Header, 3-pin, 100 mil spacing, (36-pin strip)	0.100 inch × 3	PTC36SAAN	Sullins
1	L1**	4.7 µH	Inductor, SMT, 1.0A, 175mΩ	0.116 × 0.116 inch	LPS3008-222ML	Coilcraft
1	R1	100	Resistor, Chip, 1/10W, 1%	0805	STD	STD
1	R2	162k	Resistor, Chip, 1/10W, 1%	0805	STD	STD
1	R3	909k	Resistor, Chip, 1/10W, 1%	0805	STD	STD
1	U1**	TPS65136	IC, Single inductor multiple output reg. for AMOLED	QFN-16	TPS65136RTE	TI
1	--		Shunt, 100 mil, Black	0.100	929950-00	3M
	--		PCB		HPA265	Any

Notes: 1. These assemblies are ESD sensitive, ESD precautions shall be observed.
2. These assemblies must be clean and free from flux and all contaminants. Use of no clean flux is not acceptable.
3. These assemblies must comply with workmanship standards IPC-A-610 Class 2.
4. Ref designators marked with an asterisk ('**') cannot be substituted.
All other components can be substituted with equivalent MFG's components.

3.2 Schematic

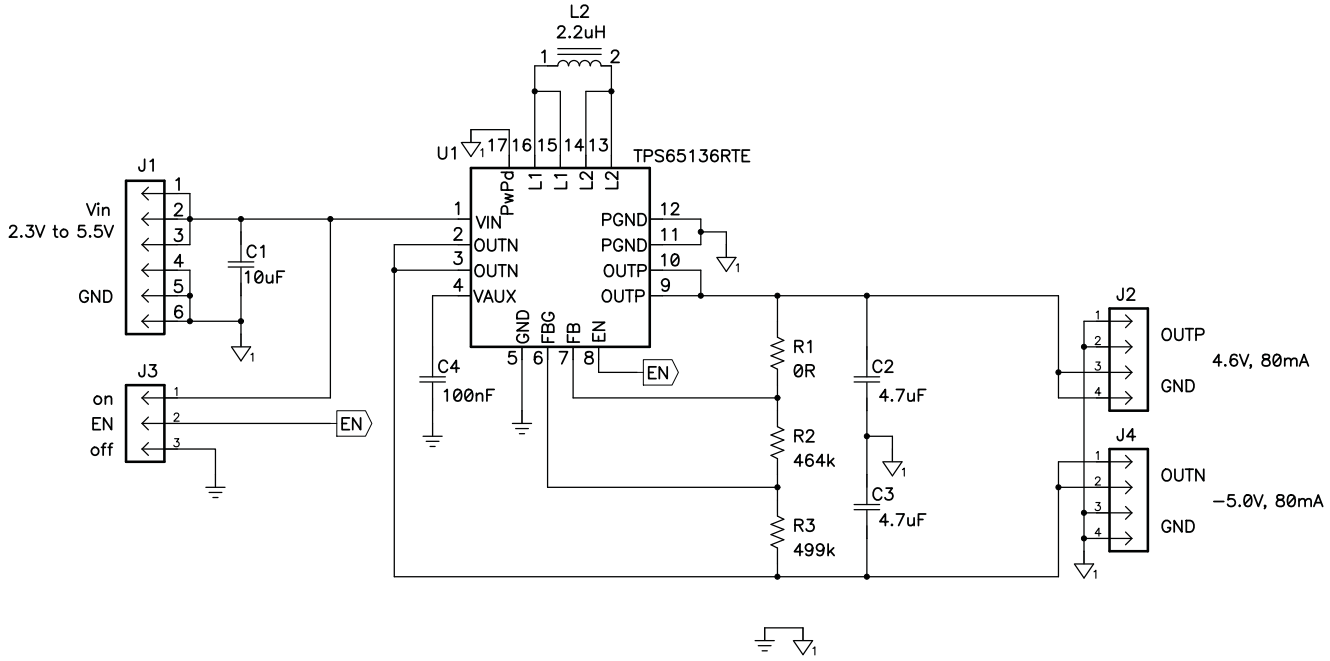

Figure 1. TPS65136EVM Schematic

4 Board Layout

Board layout is critical for all switch mode power supplies. Figure 2, Figure 3, and Figure 4 show the board layout for the HPA265 PCB. The switching nodes with high-frequency noise are isolated from the noise-sensitive feedback circuitry, and careful attention has been given to the routing of high-frequency current loops. See the data sheet for more specific layout guidelines.

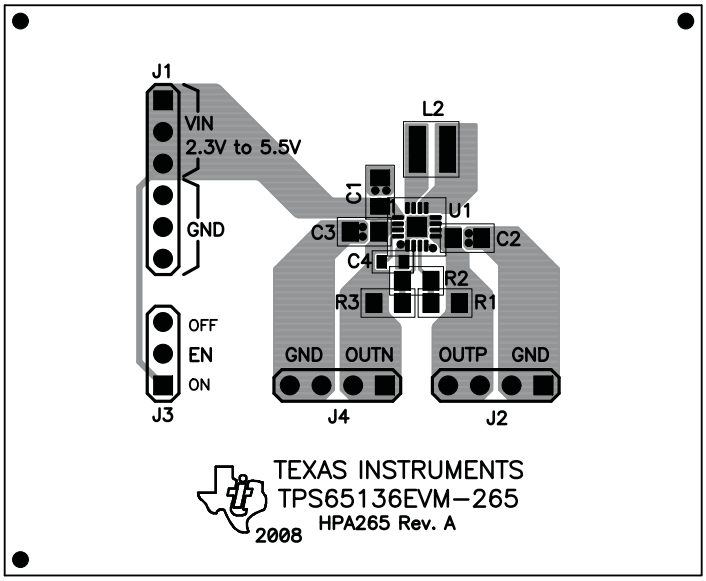

Figure 2. Top Assembly Layer

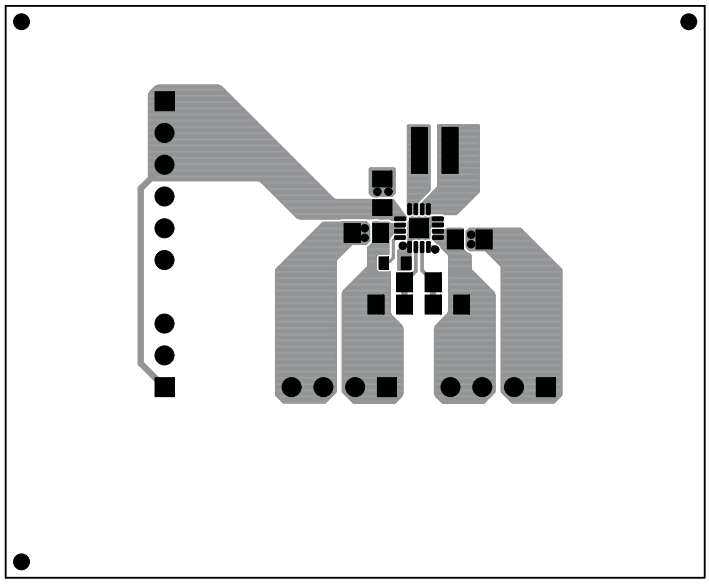

Figure 3. Top Layer

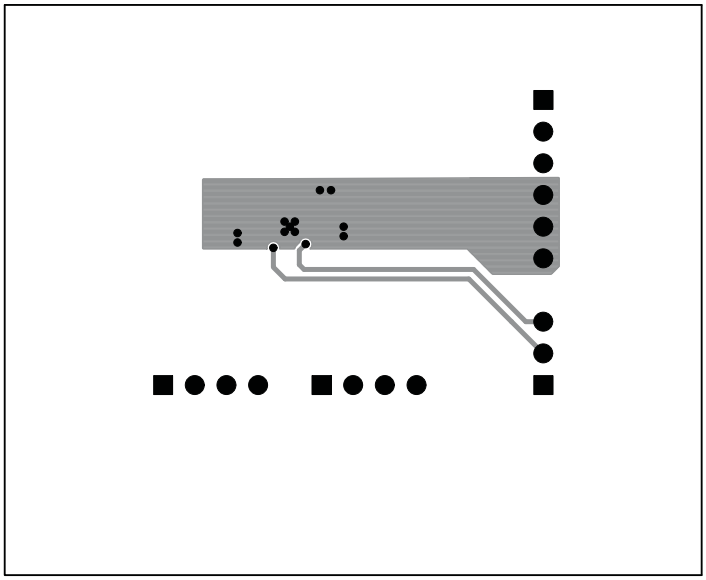

Figure 4. Bottom Layer

Related Documentation from Texas Instruments

To obtain a copy of any of the following TI document, call the Texas Instruments Literature Response Center at (800) 477-8924 or the Product Information Center (PIC) at (972) 644-5580. When ordering, identify this booklet by its title and literature number. Updated documents can also be obtained through our website at www.ti.com

Data Sheets:	**Literature Number:**
TPS65136	SLVS831

EVALUATION BOARD/KIT IMPORTANT NOTICE

Texas Instruments (TI) provides the enclosed product(s) under the following conditions:

This evaluation board/kit is intended for use for **ENGINEERING DEVELOPMENT, DEMONSTRATION, OR EVALUATION PURPOSES ONLY** and is not considered by TI to be a finished end-product fit for general consumer use. Persons handling the product(s) must have electronics training and observe good engineering practice standards. As such, the goods being provided are not intended to be complete in terms of required design-, marketing-, and/or manufacturing-related protective considerations, including product safety and environmental measures typically found in end products that incorporate such semiconductor components or circuit boards. This evaluation board/kit does not fall within the scope of the European Union directives regarding electromagnetic compatibility, restricted substances (RoHS), recycling (WEEE), FCC, CE or UL, and therefore may not meet the technical requirements of these directives or other related directives.

Should this evaluation board/kit not meet the specifications indicated in the User's Guide, the board/kit may be returned within 30 days from the date of delivery for a full refund. THE FOREGOING WARRANTY IS THE EXCLUSIVE WARRANTY MADE BY SELLER TO BUYER AND IS IN LIEU OF ALL OTHER WARRANTIES, EXPRESSED, IMPLIED, OR STATUTORY, INCLUDING ANY WARRANTY OF MERCHANTABILITY OR FITNESS FOR ANY PARTICULAR PURPOSE.

The user assumes all responsibility and liability for proper and safe handling of the goods. Further, the user indemnifies TI from all claims arising from the handling or use of the goods. Due to the open construction of the product, it is the user's responsibility to take any and all appropriate precautions with regard to electrostatic discharge.

EXCEPT TO THE EXTENT OF THE INDEMNITY SET FORTH ABOVE, NEITHER PARTY SHALL BE LIABLE TO THE OTHER FOR ANY INDIRECT, SPECIAL, INCIDENTAL, OR CONSEQUENTIAL DAMAGES.

TI currently deals with a variety of customers for products, and therefore our arrangement with the user **is not exclusive.**

TI assumes **no liability for applications assistance, customer product design, software performance, or infringement of patents or services described herein.**

Please read the User's Guide and, specifically, the Warnings and Restrictions notice in the User's Guide prior to handling the product. This notice contains important safety information about temperatures and voltages. For additional information on TI's environmental and/or safety programs, please contact the TI application engineer or visit www.ti.com/esh.

No license is granted under any patent right or other intellectual property right of TI covering or relating to any machine, process, or combination in which such TI products or services might be or are used.

FCC Warning

This evaluation board/kit is intended for use for **ENGINEERING DEVELOPMENT, DEMONSTRATION, OR EVALUATION PURPOSES ONLY** and is not considered by TI to be a finished end-product fit for general consumer use. It generates, uses, and can radiate radio frequency energy and has not been tested for compliance with the limits of computing devices pursuant to part 15 of FCC rules, which are designed to provide reasonable protection against radio frequency interference. Operation of this equipment in other environments may cause interference with radio communications, in which case the user at his own expense will be required to take whatever measures may be required to correct this interference.

Mailing Address: Texas Instruments, Post Office Box 655303, Dallas, Texas 75265
Copyright 2008, Texas Instruments Incorporated

EVM WARNINGS AND RESTRICTIONS

It is important to operate this EVM within the input voltage range of 2.7 V to 5.5 V and the output voltage range of -15 V to 15 V.

Exceeding the specified input range may cause unexpected operation and/or irreversible damage to the EVM. If there are questions concerning the input range, please contact a TI field representative prior to connecting the input power.

Applying loads outside of the specified output range may result in unintended operation and/or possible permanent damage to the EVM. Please consult the EVM User's Guide prior to connecting any load to the EVM output. If there is uncertainty as to the load specification, please contact a TI field representative.

During normal operation, some circuit components may have case temperatures greater than 125°C. The EVM is designed to operate properly with certain components above 125°C as long as the input and output ranges are maintained. These components include but are not limited to linear regulators, switching transistors, pass transistors, and current sense resistors. These types of devices can be identified using the EVM schematic located in the EVM User's Guide. When placing measurement probes near these devices during operation, please be aware that these devices may be very warm to the touch.

Mailing Address: Texas Instruments, Post Office Box 655303, Dallas, Texas 75265
Copyright 2008, Texas Instruments Incorporated

IMPORTANT NOTICE

Texas Instruments Incorporated and its subsidiaries (TI) reserve the right to make corrections, modifications, enhancements, improvements, and other changes to its products and services at any time and to discontinue any product or service without notice. Customers should obtain the latest relevant information before placing orders and should verify that such information is current and complete. All products are sold subject to TI's terms and conditions of sale supplied at the time of order acknowledgment.

TI warrants performance of its hardware products to the specifications applicable at the time of sale in accordance with TI's standard warranty. Testing and other quality control techniques are used to the extent TI deems necessary to support this warranty. Except where mandated by government requirements, testing of all parameters of each product is not necessarily performed.

TI assumes no liability for applications assistance or customer product design. Customers are responsible for their products and applications using TI components. To minimize the risks associated with customer products and applications, customers should provide adequate design and operating safeguards.

TI does not warrant or represent that any license, either express or implied, is granted under any TI patent right, copyright, mask work right, or other TI intellectual property right relating to any combination, machine, or process in which TI products or services are used. Information published by TI regarding third-party products or services does not constitute a license from TI to use such products or services or a warranty or endorsement thereof. Use of such information may require a license from a third party under the patents or other intellectual property of the third party, or a license from TI under the patents or other intellectual property of TI.

Reproduction of TI information in TI data books or data sheets is permissible only if reproduction is without alteration and is accompanied by all associated warranties, conditions, limitations, and notices. Reproduction of this information with alteration is an unfair and deceptive business practice. TI is not responsible or liable for such altered documentation. Information of third parties may be subject to additional restrictions.

Resale of TI products or services with statements different from or beyond the parameters stated by TI for that product or service voids all express and any implied warranties for the associated TI product or service and is an unfair and deceptive business practice. TI is not responsible or liable for any such statements.

TI products are not authorized for use in safety-critical applications (such as life support) where a failure of the TI product would reasonably be expected to cause severe personal injury or death, unless officers of the parties have executed an agreement specifically governing such use. Buyers represent that they have all necessary expertise in the safety and regulatory ramifications of their applications, and acknowledge and agree that they are solely responsible for all legal, regulatory and safety-related requirements concerning their products and any use of TI products in such safety-critical applications, notwithstanding any applications-related information or support that may be provided by TI. Further, Buyers must fully indemnify TI and its representatives against any damages arising out of the use of TI products in such safety-critical applications.

TI products are neither designed nor intended for use in military/aerospace applications or environments unless the TI products are specifically designated by TI as military-grade or "enhanced plastic." Only products designated by TI as military-grade meet military specifications. Buyers acknowledge and agree that any such use of TI products which TI has not designated as military-grade is solely at the Buyer's risk, and that they are solely responsible for compliance with all legal and regulatory requirements in connection with such use.

TI products are neither designed nor intended for use in automotive applications or environments unless the specific TI products are designated by TI as compliant with ISO/TS 16949 requirements. Buyers acknowledge and agree that, if they use any non-designated products in automotive applications, TI will not be responsible for any failure to meet such requirements.

Following are URLs where you can obtain information on other Texas Instruments products and application solutions:

Products		**Applications**	
Amplifiers	amplifier.ti.com	Audio	www.ti.com/audio
Data Converters	dataconverter.ti.com	Automotive	www.ti.com/automotive
DSP	dsp.ti.com	Broadband	www.ti.com/broadband
Clocks and Timers	www.ti.com/clocks	Digital Control	www.ti.com/digitalcontrol
Interface	interface.ti.com	Medical	www.ti.com/medical
Logic	logic.ti.com	Military	www.ti.com/military
Power Mgmt	power.ti.com	Optical Networking	www.ti.com/opticalnetwork
Microcontrollers	microcontroller.ti.com	Security	www.ti.com/security
RFID	www.ti-rfid.com	Telephony	www.ti.com/telephony
RF/IF and ZigBee® Solutions	www.ti.com/lprf	Video & Imaging	www.ti.com/video
		Wireless	www.ti.com/wireless

Mailing Address: Texas Instruments, Post Office Box 655303, Dallas, Texas 75265
Copyright © 2008, Texas Instruments Incorporated