TPS61240EVM-360 User's Guide

This user's guide describes the characteristics, operation, and use of the TPS61240EVM-360 evaluation module (EVM). This EVM demonstrates three individual configurations of the Texas Instruments TPS61240 3.5-MHz, high-efficiency, synchronous step-up converter capable of supplying up to 450 mA of output current. Input voltage range is 2.3 V to 5.5 V and output voltage is fixed at 5 V. This user's guide includes setup instructions, schematic diagrams, a bill of materials, and printed-circuit board layout drawings for the evaluation module.

Contents

1 Introduction 2
2 Setup 2
3 Board Layout 4
4 Schematic and Bill of Materials 6
5 Related Documentation From Texas Instruments 10

List of Figures

1 Assembly Layer 4
2 Layer One 5
3 Bottom Layer 6
4 TPS61240EVM-360 Schematic – U11 Configuration 7
5 TPS61240EVM-360 Schematic – U21 Configuration 8
6 TPS61240EVM-360 Schematic – U31 Configuration 9

List of Tables

1 Device and Package Configurations 2
2 Input and Output Connections 3
3 TPS61240EVM-360 Bill of Materials 10

1 Introduction

The Texas Instruments TPS61240EVM-360 evaluation module helps designers evaluate the operation and performance of the TPS61240 device. These devices are high-efficiency, small size, step-up boost converters that switch at 3.5 MHz.

The EVM contains three independent dc/dc converters. Reference designators for the U11 circuit all begin with 1, the U21 circuit all begin with 2, and the U31 circuit all begin with 3 (Table 1). The devices are a fixed 5-V output. .

Table 1. Device and Package Configurations

Converter	Integrated Circuit	Package
U11	TPS61240DRV	6-QFN
U21	TPS61240YFF	6-WCSP
U31	TPS61240YFF	6-WCSP

Converter U11 is the QFN layout with the enable function controlled through JP11. This circuit has sense lines for accurate monitoring of Vin and Vout, connectors J12 and J15, respectively. For additional filtering for the input power lines, a place has been provided for a capacitor, C13. The recommended value is 22 µF. Converter U21 is a chip scale layout for the smallest area. The user does not have control of the enable function, which is connected to Vin. Converter U31 is a chip scale layout that demonstrates the use of an output diode for input overvoltage protection and diode ORing. Enable function is available on this circuit through JP31.

2 Setup

This section describes the jumpers and connectors on the EVM as well as how to properly connect, set up, and use the TPS61240EVM-360.

2.1 Input/Output Connector Descriptions

2.1.1 U11 Circuit J11 and J13 – Input Voltage

This is the positive and return input connection to U11 converter, J11 positive, and J13 return. Twist the leads to the input supply, and keep them as short as possible to minimize EMI transmission.

2.1.2 U11 Circuit J14 and J16 – Output Voltage

This is the positive and return output connection to U11 converter, J14 positive, and J16 return.

2.1.3 U11 Circuit J12 and J15 – Sense Lines

This connector provides monitoring for input voltage, J12. For monitoring output voltage, J15 is provided. Do not use the J12 and J15 for input or output current because the trace width is small.

2.1.4 U11 Circuit JP11 – EN

This jumper turns U11 on and off . To enable the converter, install a shorting jumper between ON and EN. To disable the converter, install a shorting jumper between EN and OFF.

2.1.5 U21 Circuit TP21 and TP23 – Input Voltage

This is the positive and return input connection to the U21 converter, TP21 positive and TP23 return. Twist the leads to the input supply, and keep them as short as possible to minimize EMI transmission.

2.1.6 U21 Circuit TP22 and TP24 – Output Voltage

This is the positive and return output connection to the U21 converter, J22 positive, and J24 return.

2.1.7 U31 Circuit TP31 and TP33 – Input Voltage

This is the positive and return input connection to the U31 converter, TP31 positive, and TP33 return. Twist the leads to the input supply, and keep them as short as possible to minimize EMI transmission.

2.1.8 U31 Circuit TP32 and TP34 – Output Voltage

This is the positive and return output connection to the U31 converter, J32 positive, and J34 return.

2.1.9 U31 Circuit JP31 – EN

This jumper turns U31 on and off . To enable the converter, install a shorting jumper between ON and EN. To disable the converter, install a shorting jumper between EN and OFF.

2.2 Setup

All three converters are designed to use an input voltage between 2.3 V and 5.5 V. Connect the input voltage power supply and output according to Table 2.

Table 2. Input and Output Connections

Converter No.	Signal	Connection
U11	Positive Input Voltage	J11
	Input Voltage Return	J13
	Positive Output Voltage	J14
	Output Voltage Return	J16
U21	Positive Input Voltage	TP21
	Input Voltage Return	TP23
	Positive Output Voltage	TP22
	Output Voltage Return	TP24
U31	Positive Input Voltage	TP31
	Input Voltage Return	TP33
	Positive Output Voltage	TP32
	Output Voltage Return	TP34

2.3 Operation

JP11 and JP31 must be configured for proper operation of converter U11 and U31. Use a shorting block to set JP11 and JP31 to the desired configurations. For JP11, jump the EN pin to the ON pin to enable and operate the converter U11. Jumping the EN pin to the OFF pin disables the converter.

For JP31, jump the EN pin to the ON pin to enable and operate the converter U31. Jumping the EN pin to the OFF pin disables the converter.

The EN pin must be jumped to one of these positions. Do not leave the EN pin floating.

Converter U21 does not require any additional configuration for operation other than input power. This converter is hard-wired to always be enabled.

2.4 Test Results

See the Typical Characteristics section of the TPS61240 data sheet. This EVM uses the same inductors and similar capacitors as those used for characterization in the data sheet. Performance is consistent with that shown in the data sheet.

3 Board Layout

This section provides the TPS61240EVM-360 board layout and illustrations.

Board layout is critical for all high-frequency, switch-mode power supplies. Figure 1, Figure 2, and Figure 3 show the board layout for the TPS61240EVM-360 printed-circuit board. The nodes with high-switching frequencies and currents are kept as short as possible to minimize trace inductance. High-impedance inputs to the TPS61240, such as the Vout pin, have traces that are shielded by ground traces and planes. Careful attention has been given to the routing of high-frequency current loops and a single-point grounding scheme is used. See the data sheet for specific layout guidelines.

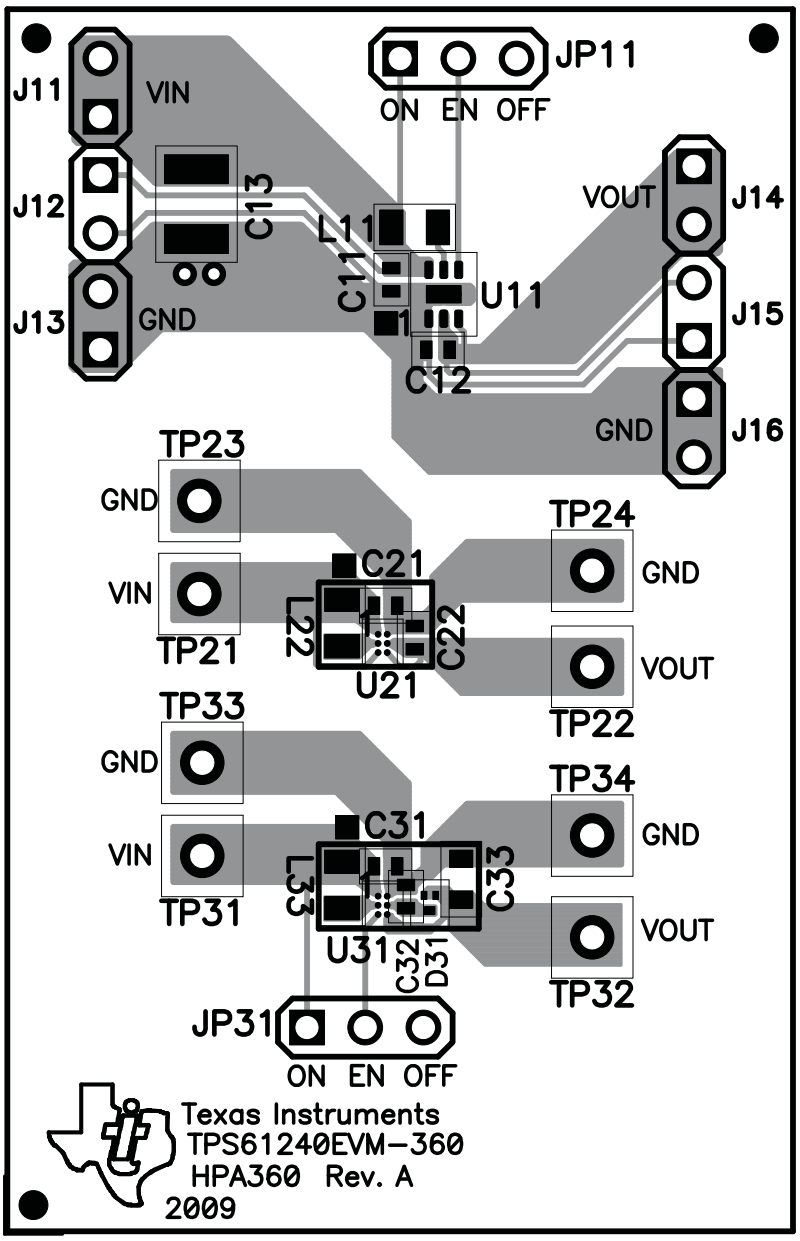

Figure 1. Assembly Layer

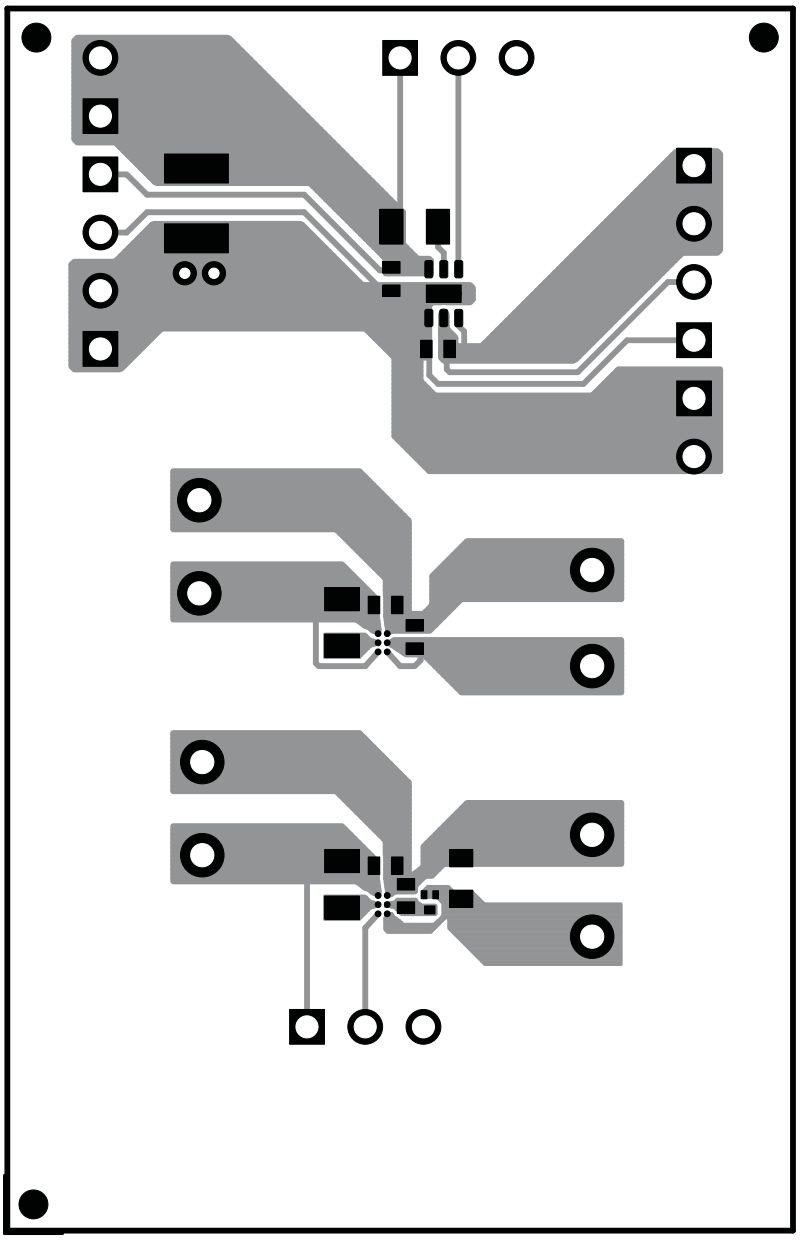

Figure 2. Layer One

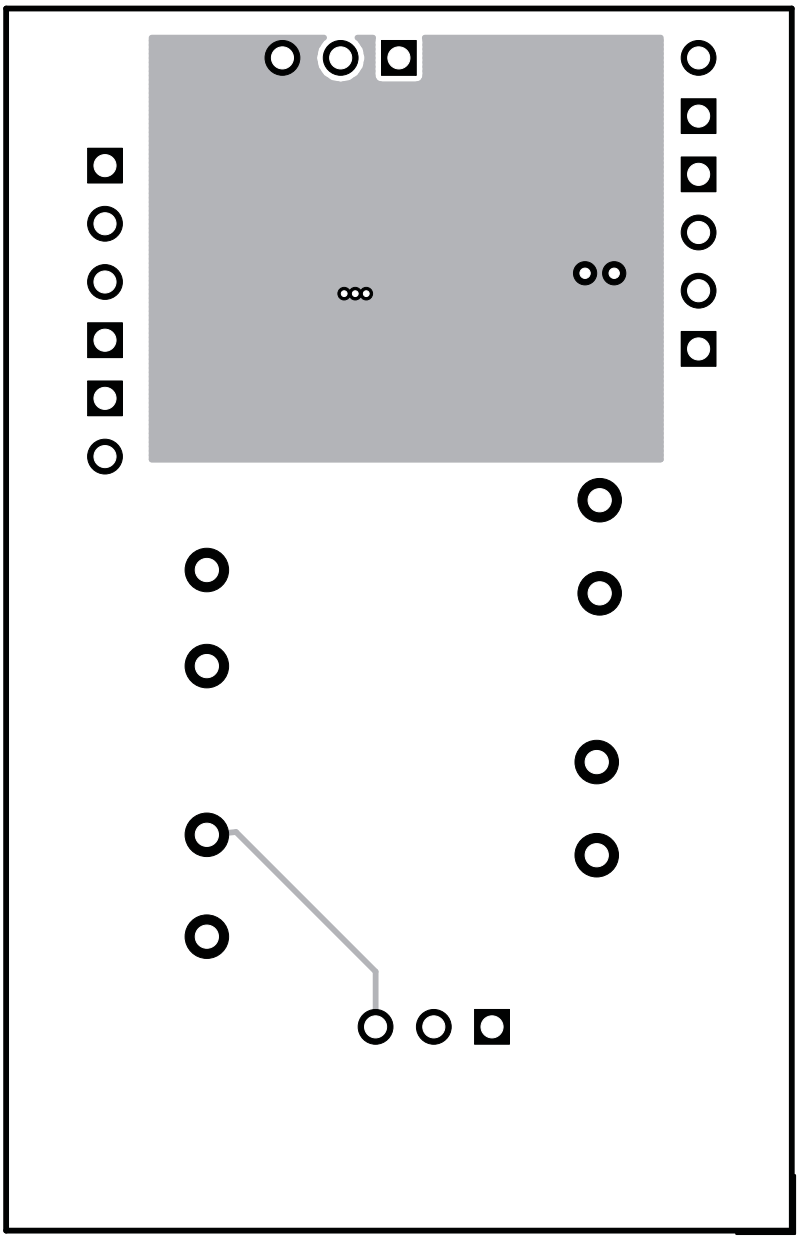

Figure 3. Bottom Layer

4 Schematic and Bill of Materials

This section provides the TPS61240EVM-360 schematics and bill of materials.

4.1 Schematics

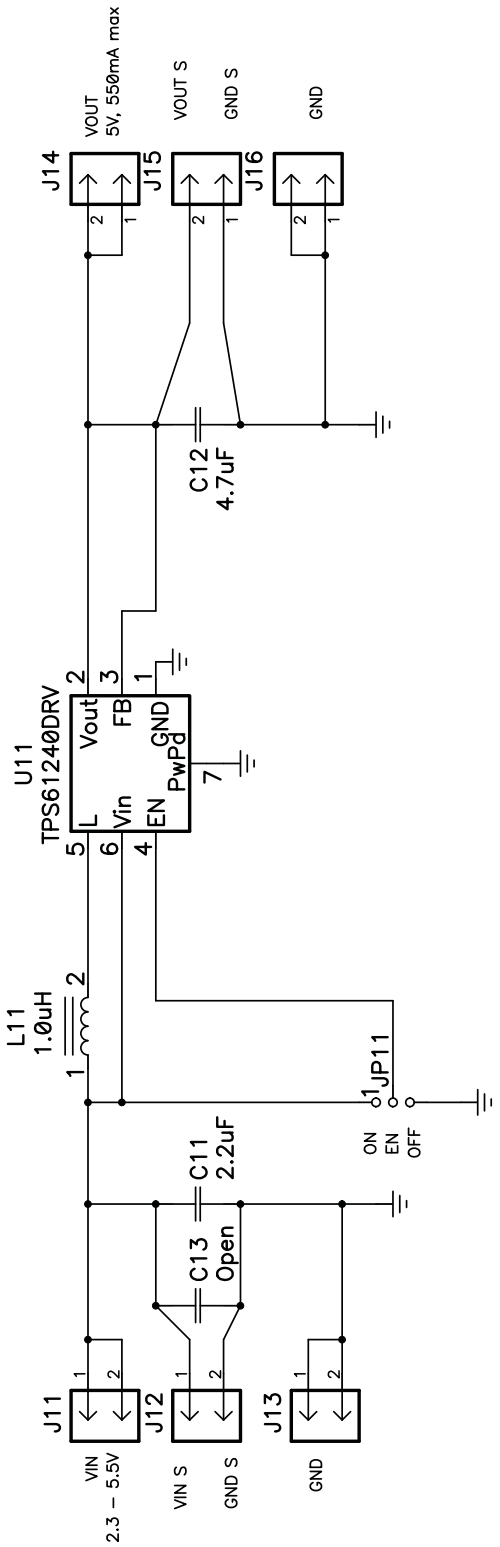

Figure 4. TPS61240EVM-360 Schematic – U11 Configuration

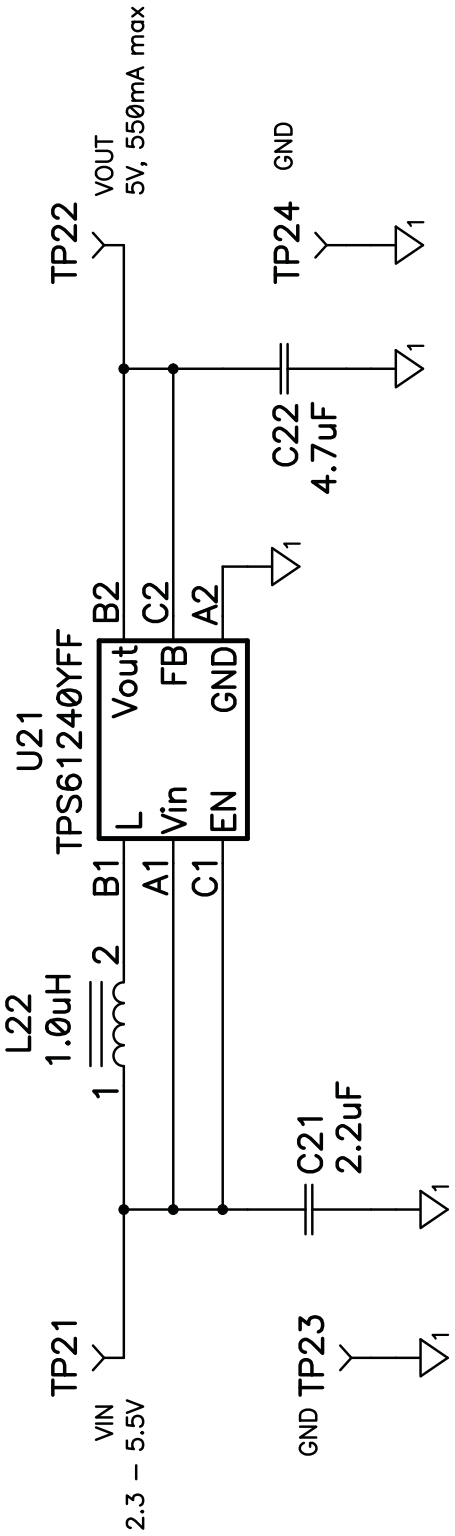

Figure 5. TPS61240EVM-360 Schematic – U21 Configuration

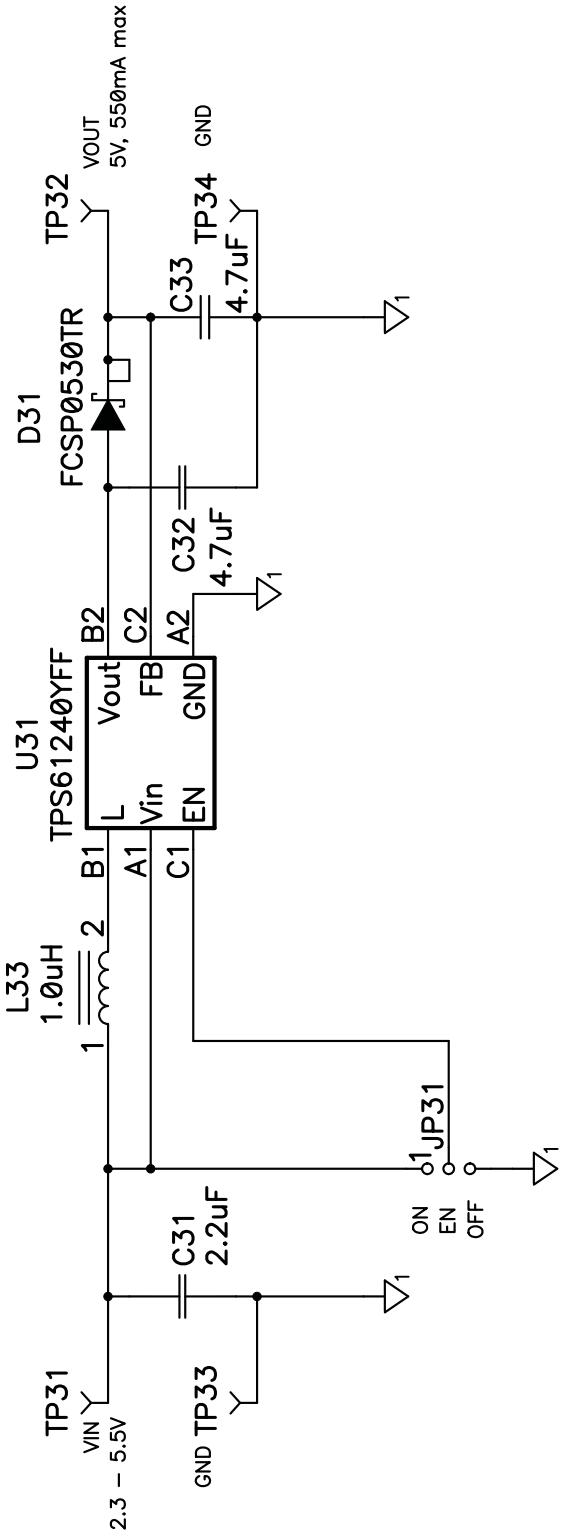

Figure 6. TPS61240EVM-360 Schematic – U31 Configuration

4.2 Bill of Materials

Table 3. TPS61240EVM-360 Bill of Materials

Count	RefDes	Value	Description	Size	Part Number	MFR
3	C11, C21, C31	2.2µF	Capacitor, Ceramic, 6.3V, X5R, 20%	0402	JDK105BJ225MV	Taiyo Yuden
3	C12, C22, C32	4.7µF	Capacitor, Ceramic, 6.3V, X5R, 20%	0402	JDK105BJ475MV	Taiyo Yuden
1	C13	Open	Capacitor, Ceramic, 6.3V, X5R, 20%	1210	Std	Std
1	C33	4.7µF	Capacitor, Ceramic, 6.3V, X5R, 20%	0603	Std	Std
1	D31	FCSP0530TR	Diode, Schottky Barrier, 0.5A, 30V	FlipKY	FCSP0530TR	Vishay
6	J11, J12, J13, J14, J15, J16	PEC02SAAN	Header, Male 2-pin, 100mil spacing	0.100 inch x 2	PEC02SAAN	Sullins
2	JP11, JP31	PEC03SAAN	Header, 3 pin, 100mil spacing	0.100 x 3	PEC03SAAN	Sullins
3	L11, L22, L33	1.0µH	Inductor, SMT, 0.9A, 180milliohm	2012	MDT2012-CH1R0A	TOKO
4	TP21, TP22, TP31, TP32	Red TP	Test Point, Red, Thru Hole Color Keyed	0.100 x 0.100 inch	5000	Keystone
4	TP23, TP24, TP33, TP34	Black TP	Test Point, Black, Thru Hole Color Keyed	0.100 x 0.100 inch	5001	Keystone
1	U11	TPS61240DRV	IC, 200mA High Fq. Step-up Converter	TDFN	TPS61240DRV	TI
2	U21, U31	TPS61240YFF	IC, 200mA High Fq. Step-up Converter	WCSP-6	TPS61240YFF	TI
2	—		Shunt, 100-mil, Black	0.100	929950-00	3M
1			PCB	2.1"x 1.35"x 0.062"	HPA360	Any

5 Related Documentation From Texas Instruments

TPS61240, 3.5-MHz High Efficiency Step-Up Converter data sheet (SLVS806)

EVALUATION BOARD/KIT IMPORTANT NOTICE

Texas Instruments (TI) provides the enclosed product(s) under the following conditions:

This evaluation board/kit is intended for use for **ENGINEERING DEVELOPMENT, DEMONSTRATION, OR EVALUATION PURPOSES ONLY** and is not considered by TI to be a finished end-product fit for general consumer use. Persons handling the product(s) must have electronics training and observe good engineering practice standards. As such, the goods being provided are not intended to be complete in terms of required design-, marketing-, and/or manufacturing-related protective considerations, including product safety and environmental measures typically found in end products that incorporate such semiconductor components or circuit boards. This evaluation board/kit does not fall within the scope of the European Union directives regarding electromagnetic compatibility, restricted substances (RoHS), recycling (WEEE), FCC, CE or UL, and therefore may not meet the technical requirements of these directives or other related directives.

Should this evaluation board/kit not meet the specifications indicated in the User's Guide, the board/kit may be returned within 30 days from the date of delivery for a full refund. THE FOREGOING WARRANTY IS THE EXCLUSIVE WARRANTY MADE BY SELLER TO BUYER AND IS IN LIEU OF ALL OTHER WARRANTIES, EXPRESSED, IMPLIED, OR STATUTORY, INCLUDING ANY WARRANTY OF MERCHANTABILITY OR FITNESS FOR ANY PARTICULAR PURPOSE.

The user assumes all responsibility and liability for proper and safe handling of the goods. Further, the user indemnifies TI from all claims arising from the handling or use of the goods. Due to the open construction of the product, it is the user's responsibility to take any and all appropriate precautions with regard to electrostatic discharge.

EXCEPT TO THE EXTENT OF THE INDEMNITY SET FORTH ABOVE, NEITHER PARTY SHALL BE LIABLE TO THE OTHER FOR ANY INDIRECT, SPECIAL, INCIDENTAL, OR CONSEQUENTIAL DAMAGES.

TI currently deals with a variety of customers for products, and therefore our arrangement with the user **is not exclusive.**

TI assumes **no liability for applications assistance, customer product design, software performance, or infringement of patents or services described herein.**

Please read the User's Guide and, specifically, the Warnings and Restrictions notice in the User's Guide prior to handling the product. This notice contains important safety information about temperatures and voltages. For additional information on TI's environmental and/or safety programs, please contact the TI application engineer or visit www.ti.com/esh.

No license is granted under any patent right or other intellectual property right of TI covering or relating to any machine, process, or combination in which such TI products or services might be or are used.

FCC Warning

This evaluation board/kit is intended for use for **ENGINEERING DEVELOPMENT, DEMONSTRATION, OR EVALUATION PURPOSES ONLY** and is not considered by TI to be a finished end-product fit for general consumer use. It generates, uses, and can radiate radio frequency energy and has not been tested for compliance with the limits of computing devices pursuant to part 15 of FCC rules, which are designed to provide reasonable protection against radio frequency interference. Operation of this equipment in other environments may cause interference with radio communications, in which case the user at his own expense will be required to take whatever measures may be required to correct this interference.

EVM WARNINGS AND RESTRICTIONS

It is important to operate this EVM within the input voltage range of 2.3 V to 5.5 V and the output voltage range of 5 V.

Exceeding the specified input range may cause unexpected operation and/or irreversible damage to the EVM. If there are questions concerning the input range, please contact a TI field representative prior to connecting the input power.

Applying loads outside of the specified output range may result in unintended operation and/or possible permanent damage to the EVM. Please consult the EVM User's Guide prior to connecting any load to the EVM output. If there is uncertainty as to the load specification, please contact a TI field representative.

During normal operation, some circuit components may have case temperatures greater than 25°C. The EVM is designed to operate properly with certain components above 25°C as long as the input and output ranges are maintained. These components include but are not limited to linear regulators, switching transistors, pass transistors, and current sense resistors. These types of devices can be identified using the EVM schematic located in the EVM User's Guide. When placing measurement probes near these devices during operation, please be aware that these devices may be very warm to the touch.

Mailing Address: Texas Instruments, Post Office Box 655303, Dallas, Texas 75265
Copyright © 2009, Texas Instruments Incorporated

IMPORTANT NOTICE

Texas Instruments Incorporated and its subsidiaries (TI) reserve the right to make corrections, modifications, enhancements, improvements, and other changes to its products and services at any time and to discontinue any product or service without notice. Customers should obtain the latest relevant information before placing orders and should verify that such information is current and complete. All products are sold subject to TI's terms and conditions of sale supplied at the time of order acknowledgment.

TI warrants performance of its hardware products to the specifications applicable at the time of sale in accordance with TI's standard warranty. Testing and other quality control techniques are used to the extent TI deems necessary to support this warranty. Except where mandated by government requirements, testing of all parameters of each product is not necessarily performed.

TI assumes no liability for applications assistance or customer product design. Customers are responsible for their products and applications using TI components. To minimize the risks associated with customer products and applications, customers should provide adequate design and operating safeguards.

TI does not warrant or represent that any license, either express or implied, is granted under any TI patent right, copyright, mask work right, or other TI intellectual property right relating to any combination, machine, or process in which TI products or services are used. Information published by TI regarding third-party products or services does not constitute a license from TI to use such products or services or a warranty or endorsement thereof. Use of such information may require a license from a third party under the patents or other intellectual property of the third party, or a license from TI under the patents or other intellectual property of TI.

Reproduction of TI information in TI data books or data sheets is permissible only if reproduction is without alteration and is accompanied by all associated warranties, conditions, limitations, and notices. Reproduction of this information with alteration is an unfair and deceptive business practice. TI is not responsible or liable for such altered documentation. Information of third parties may be subject to additional restrictions.

Resale of TI products or services with statements different from or beyond the parameters stated by TI for that product or service voids all express and any implied warranties for the associated TI product or service and is an unfair and deceptive business practice. TI is not responsible or liable for any such statements.

TI products are not authorized for use in safety-critical applications (such as life support) where a failure of the TI product would reasonably be expected to cause severe personal injury or death, unless officers of the parties have executed an agreement specifically governing such use. Buyers represent that they have all necessary expertise in the safety and regulatory ramifications of their applications, and acknowledge and agree that they are solely responsible for all legal, regulatory and safety-related requirements concerning their products and any use of TI products in such safety-critical applications, notwithstanding any applications-related information or support that may be provided by TI. Further, Buyers must fully indemnify TI and its representatives against any damages arising out of the use of TI products in such safety-critical applications.

TI products are neither designed nor intended for use in military/aerospace applications or environments unless the TI products are specifically designated by TI as military-grade or "enhanced plastic." Only products designated by TI as military-grade meet military specifications. Buyers acknowledge and agree that any such use of TI products which TI has not designated as military-grade is solely at the Buyer's risk, and that they are solely responsible for compliance with all legal and regulatory requirements in connection with such use.

TI products are neither designed nor intended for use in automotive applications or environments unless the specific TI products are designated by TI as compliant with ISO/TS 16949 requirements. Buyers acknowledge and agree that, if they use any non-designated products in automotive applications, TI will not be responsible for any failure to meet such requirements.

Following are URLs where you can obtain information on other Texas Instruments products and application solutions:

Products		**Applications**	
Amplifiers	amplifier.ti.com	Audio	www.ti.com/audio
Data Converters	dataconverter.ti.com	Automotive	www.ti.com/automotive
DLP® Products	www.dlp.com	Broadband	www.ti.com/broadband
DSP	dsp.ti.com	Digital Control	www.ti.com/digitalcontrol
Clocks and Timers	www.ti.com/clocks	Medical	www.ti.com/medical
Interface	interface.ti.com	Military	www.ti.com/military
Logic	logic.ti.com	Optical Networking	www.ti.com/opticalnetwork
Power Mgmt	power.ti.com	Security	www.ti.com/security
Microcontrollers	microcontroller.ti.com	Telephony	www.ti.com/telephony
RFID	www.ti-rfid.com	Video & Imaging	www.ti.com/video
RF/IF and ZigBee® Solutions	www.ti.com/lprf	Wireless	www.ti.com/wireless

Mailing Address: Texas Instruments, Post Office Box 655303, Dallas, Texas 75265
Copyright © 2009, Texas Instruments Incorporated