User's Guide
SLVU421–December 2010

TPS61199EVM-598 Evaluation Module for TPS61199 White LED Driver for LCD Monitor Backlighting

This user's guide describes the characteristics, operation, and use of the TPS61199 evaluation module (EVM). This EVM contains the Texas Instruments TPS61199, a WLED power solution providing up to eight independently regulated current outputs using a single inductor step-up (boost) converter. The current outputs are ideal for driving a WLED backlight in notebook/laptop computers. This user's guide includes EVM specifications, recommended test setup, bill of materials, and a schematic diagram.

Contents

1 Applications 2
2 TPS61199EVM-598 Electrical Performance Specifications 2
3 Modifications 2
4 Schematic and Bill of Materials 3
5 Connector and Test Point Descriptions 4
5.1 Input/Output Connections 4
6 Test Requirements and Setup 6
6.1 Hardware Requirements 6
6.2 Hardware Setup 6
7 TPS61199EVM-598 Assembly Drawings and Layout 6

List of Figures

1 HPA598EVM Schematic 3
2 TPS61199EVM Test Setup 6
3 TPS61199EVM-598 Component Placement, Viewed From Top 7
4 TPS61199EVM-598 Top Copper, Viewed From Top 8
5 TPS61199EVM-598 Bottom Copper, Viewed From Bottom 8

List of Tables

1 TPS61199EVM-598 Electrical Performance Specifications 2
2 Bill of Materials 4

© 2010, Texas Instruments Incorporated

1 Applications

The TPS61199 is an excellent solution for computer notebook and monitor LCD display backlighting.

2 TPS61199EVM-598 Electrical Performance Specifications

Table 1 provides a summary of the TPS61199EVM-598 performance specifications. All specifications are given for an ambient temperature of 25°C.

Table 1. TPS61199EVM-598 Electrical Performance Specifications

Parameter		Notes and Conditions [1]	Min	Typ	Max	Unit
Input Characteristics						
V_{IN}	Input voltage		8		30	V
EN, PWM	Logic high		2		20	V
EN, PWM	Logic low				0.8	V
I_{q_VIN}	Input quiescent current	EN=high, PWM=low, no switching, V_{IN} = 30 V, No load			1.5	mA
V_{IN_UVLO}	Input UVLO	V_{IN} ramp down		6.5	7	V
		V_{IN} hysteresis		0.3		
Output Characteristics						
V_{OUT}	V(TP1)	J6 connected to 8 strings of 17 WLEDs, JP1 shorted, JP4-11 pins 1-2 shorted, EN/PWM = VDD	50		53	V
		J6 connected to 8 strings of 17 WLED, JP1 open, JP4-11 pins 1-2 shorted, EN/PWM = VDD, OVP active			60	V
I_{OUT}	I(JP1) = 8 X IFBx	V_{IN} = 12 V, R_{ISET} = 40.6 kΩ, PWM = VDD		480		mA
System Characteristics						
f_S	Oscillator frequency	R_{FSW} = 160 kΩ	0.4	0.5	0.6	MHz

(1) The user can estimate the input current by solving the power balance equation, eff = P_{OUT}/P_{IN} = (V_O × I_O)/(V_{IN} × I_{IN}), for I_{IN} and estimating the efficiency to be a conservative 85%. For example, for V_O = 51 V, V_{IN} = 8 V and I_O = 8 × 60 mA = 480 mA, I_{IN} = (51 V × 480 mA)/(8 V × 0.85) = 3.6 A

3 Modifications

See the data sheet (SLVSAN3) when changing components such as R6 to set the LED current or R2 and R3 to set the OVP threshold. To aid in such customization of the EVM, the board was designed with devices having 0603 or larger footprints. A real implementation likely occupies less total board space.

Note that changing components can improve or degrade EVM performance. For example, using inductors with larger saturation current rating allows the use of lower input voltages.

© 2010, Texas Instruments Incorporated

4 Schematic and Bill of Materials

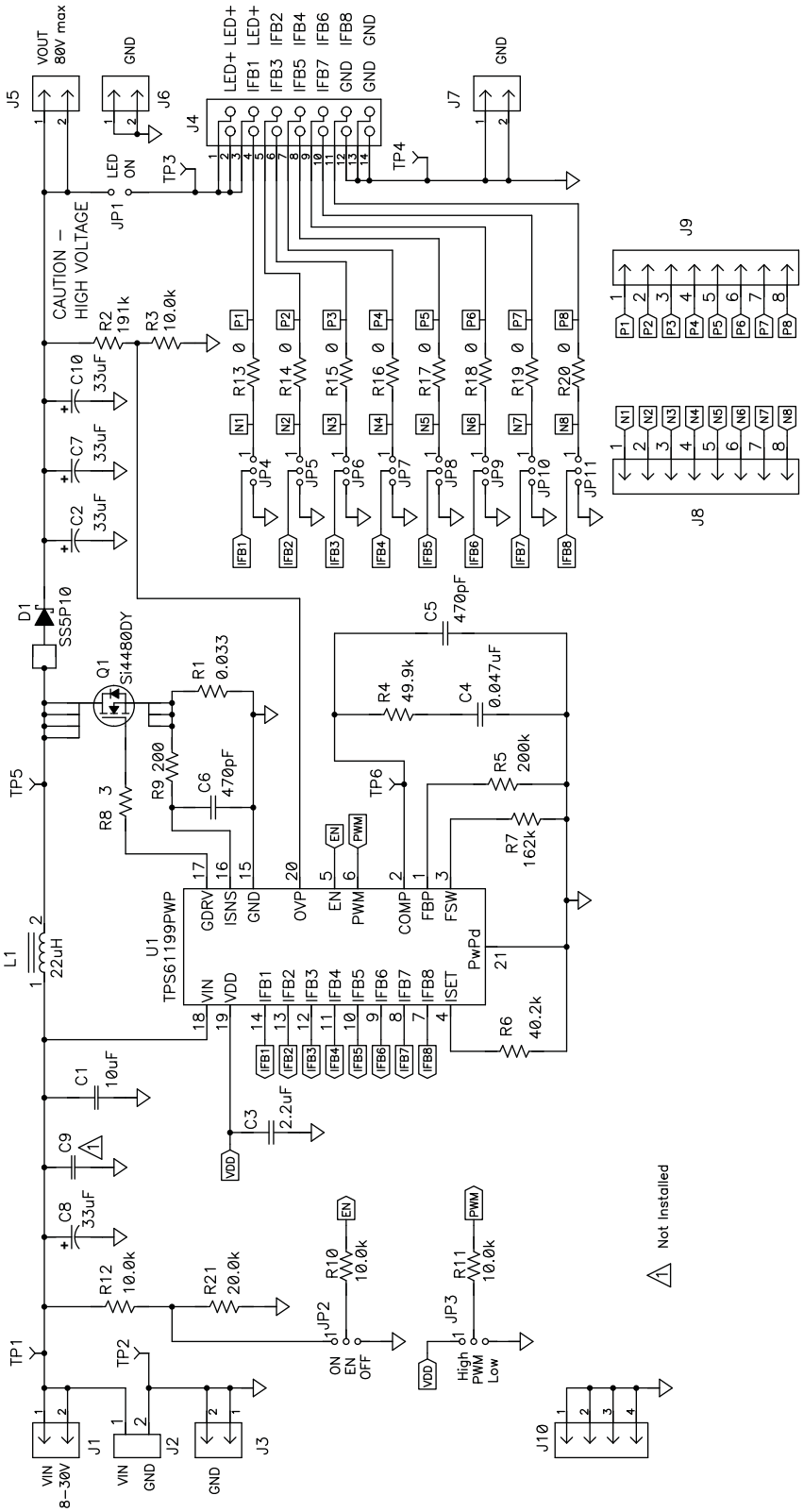

NOTE: For Reference Only, See Table 2 specific Values

Figure 1. HPA598EVM Schematic

© 2010, Texas Instruments Incorporated

Table 2. Bill of Materials

Count	RefDes	Value	Description	Size	Part Number	MFR
1	C1	10 µF	Capacitor, Ceramic, 50V, X7R, 10%	1210	Std	Std
4	C2, C7, C8, C10	33 µF	Capacitor, Electrolytic, 100VDC, 20%	8 x 11.5 mm	UPW2A330MPD6	Nichicon
1	C3	2.2 µF	Capacitor, Ceramic, 10V, X7R, 10%	0805	Std	Std
1	C4	0.047 µF	Capacitor, Ceramic, 25V, X7R, 10%	0603	Std	Std
2	C5, C6	470 pF	Capacitor, Ceramic, 25V, X7R, 10%	0603	Std	Std
0	C9	Open	Capacitor, Ceramic	1210	Std	Vishay
1	D1	SS5P10 Alt. PDS5100H	Diode, High Current, Schottky Barrier, 5A, 100V	TO-277	SS5P10-M3/86A Alt. PDS5100H	Vishay Alt. Diodes Inc
5	J1, J3, J5-J7	PEC02SAAN	Header, Male 2-pin, 100mil spacing	0.100 inch x 2	PEC02SAAN	Sullins
1	J2	ED555/2DS	Terminal Block, 2-pin, 6-A, 3.5mm	0.27 x 0.25 inch	ED555/2DS	OST
1	J4	N2514-6002-RB	Connector, Male Straight 2x7 pin, 100mil spacing, 4 Wall	0.100 inch x 2x7	N2514-6002-RB	3M
2	J8, J9	PEC08SAAN	Header, Male 8-pin, 100mil spacing	0.100 inch x 8	PEC08SAAN	Sullins
1	J10	PEC04SAAN	Header, Male 4-pin, 100mil spacing,	0.100 inch x 4	PEC04SAAN	Sullins
1	JP1	PEC02SAAN	Header, 2-pin, 100mil spacing	0.100 inch x 2	PEC02SAAN	Sullins
10	JP2-JP11	PEC03SAAN	Header, 3-pin, 100mil spacing	0.100 inch x 3	PEC03SAAN	Sullins
1	L1	22 µH	Inductor, SMT, 3.6A, 43.2 mΩ	0.485 sq inch	CDRH127NP-220MC Alt. MSS1278-223ML	Sumida Alt. Coilcraft
1	Q1	SI4480DY Alt. FDS3590	MOSFET, N-ch, 80V, 6A, 35 mΩ	SO8	SI4480DY-T1-E3 Alt. FDS3590	Vishay Alt. Fairchild
1	R1	0.033	Resistor, Chip, 1/2W, 1%	1812	Std	Std
1	R2	191k	Resistor, Chip, 1/16W, 1%	0603	Std	Std
4	R3, R10-R12	10k	Resistor, Chip, 1/16W, 1%	0603	Std	Std
1	R4	49.9K	Resistor, Chip, 1/16W, 1%	0603	Std	Std
1	R5	200K	Resistor, Chip, 1/16W, 1%	0603	Std	Std
1	R6	40.2k	Resistor, Chip, 1/16W, 1%	0603	Std	Std
1	R7	162k	Resistor, Chip, 1/16W, 1%	0603	Std	Std
1	R8	3	Resistor, Chip, 1/16W, 1%	0603	Std	Std
1	R9	200	Resistor, Chip, 1/16W, 1%	0603	Std	Std
8	R13-R20	0	Resistor, Chip, 1/10W, 1%	0805	Std	Std
1	R21	20k	Resistor, Chip, 1/16W, 1%	0603	Std	Std
4	TP1, TP3, TP5, TP6	5000	Test Point, Red, Thru Hole Color Keyed	0.100 x 0.100 inch	5000	Keystone
2	TP2, TP4	5001	Test Point, Black, Thru Hole Color Keyed	0.100 x 0.100 inch	5001	Keystone
1	U1	TPS61199PWP	IC, WLED Driver for LCD Monitors Backlighting	HTSSOP	TPS61199PWP	TI
11	–		Shunt, 100-mil, Black	0.100	929950-00	3M
1			PCB, 2.05 x 3.675 x 0.062 inch		HPA598	Any

5 Connector and Test Point Descriptions

5.1 Input/Output Connections

The connections points are described in the following paragraphs.

5.1.1 J1 – VIN

This header is the positive connection to the input power supply. Twist the input supply and GND leads to the input supply and keep them as short as possible.

© 2010, Texas Instruments Incorporated

5.1.2 J2 – VIN/GND

This header provides a high current positive and return connection to the input power supply. Twist the input supply leads and keep them as short as possible.

5.1.3 J3 – GND

This header is the return connection to the input power supply.

5.1.4 J4 – 14-Pin Connector

This header facilitates connecting the TPS61199EVM-598 to the load using a 14-pin ribbon cable. The load must be created by the user with WLEDs or properly sized resistors.

5.1.5 J5 – VOUT

This header connects to the board's VOUT plane.

5.1.6 J6, J7, and J10 – GND

These headers connect to the board's GND plane.

5.1.7 J8 and J9

By changing R13-R20 from 0 ohms to a small resistor, these headers allow the user to measure the voltage across each resistor and therefore the current into each IFBx pin individually. They also provide the user easy connection to the IFBx pins if a ribbon cable into J4 is not used.

5.1.8 JP1 – LED ON

The user can remove the shunt on this jumper and connect the high side of the load to J5. Installing the shunt on this jumper connects the output of the boost converter to J4. Removing the jumper removes the load connected to J4 from the boost converter feedback path and causes the integrated circuit's (IC) overvoltage protection circuitry to activate. Instead of the shunt, the user can place an ammeter across the jumper to measure the total output current (i.e., 8×IFBx).

5.1.9 JP2 – EN

Installing the shunt on this jumper to ON sets the ENABLE pin voltage to VIN scaled down with a resistor divider, thereby enabling the IC's boost converter. Connecting it to OFF pulls EN to ground, which disables the IC's boost converter.

5.1.10 JP3 – PWM

Installing the shunt on this jumper to VDD sets the current sinks to 100% current and therefore any attached LEDs to full brightness. The user must connect an external PWM signal or use JP3 to take PWM to a logic high (above 2 V but no higher than 20 V) in order to enable the current sinks.

5.1.11 JP4 – JP11

The user can use the shunt to tie the IFBx pin to JPx and then connect J8 or J9 to the low side of the external resistors or WLEDs. Alternatively, the user can connect J4 to the load. For strings that are not used, the user should tie the applicable IFBx pin to GND using these jumpers.

© 2010, Texas Instruments Incorporated

6 Test Requirements and Setup

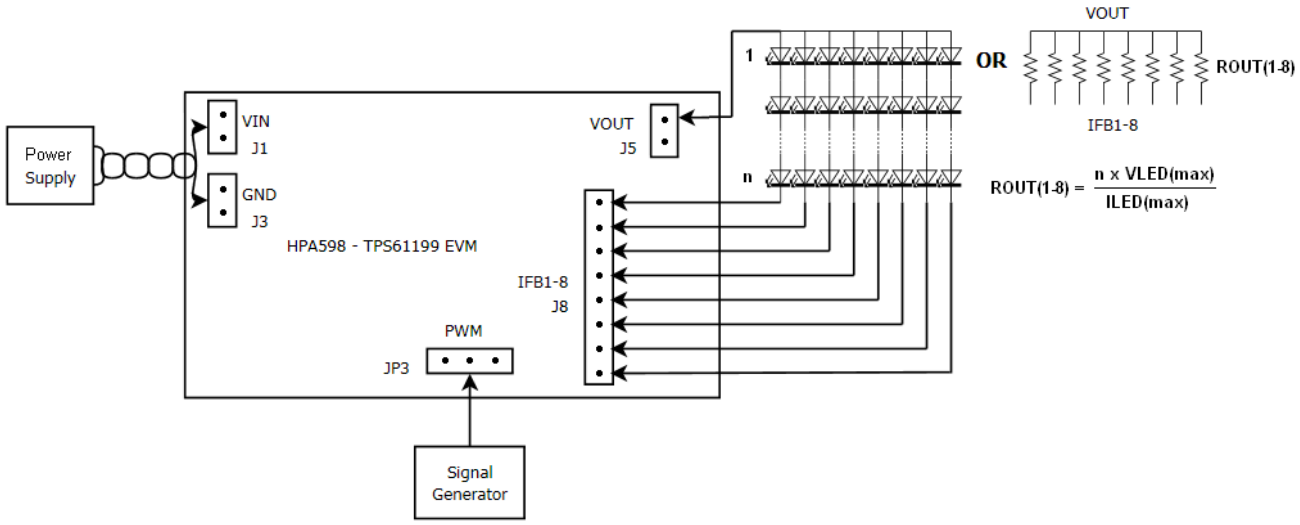

Figure 2. TPS61199EVM Test Setup

6.1 Hardware Requirements

1. This EVM requires an external power supply capable of providing up to 30 V at 4 A.
2. If dimming via an external PWM signal is desired, then a function generator capable of providing at least a 2-V amplitude PWM signal between 100 Hz to 22 kHz is required to avoid screen flickering and maintain dimming linearity.
3. A load using resistors or WLEDs is required. The resistance required in each string is chosen using the output voltage and desired current in each string. The output voltage is determined by the sum of the maximum forward voltage drop of all "n" WLEDs in one string. $R_{OUT} = (n \times V_{LED(MAX)})/I_{LED(MAX)}$. For example, if there are n=14 LEDs with $V_{LED(MAX)}$ = 3.6 V, $I_{LED(MAX)}$ = 60 mA, then R_{OUT} = (14 × 3.6 V)/60 mA = 840 Ω → 845 Ω next highest standard value.
4. Digital multimeters capable of measuring voltages and currents are recommended.
5. An oscilloscope is also recommended.

6.2 Hardware Setup

- Connect a power supply capable of supplying up to 30 V at 4 A between VIN and GND (J2 or J1 and J3). Do not turn on the power supply.
- Either set JP2 ON or connect a second logic signal or power supply capable of providing at least 2-V voltage to the high-impedance EN pin of JP2.
- J5 must be connected directly or through an ammeter to the high side of the load. The low side of each string in the load must then be connected to IFBx using J8 or J9. Alternatively, JP1 must be connected directly or through an ammeter. Alternatively, a load can be connected to J4 using a 14-pin ribbon cable.
- Properly configure JP4-JP11 so that each IFB line either connects directly to the J8 connector or to GND. Unused IFBx lines must have the appropriate JP4-JP11 jumpers shunted to ground.
- To turn on the LEDs at full LED current and brightness, install JP3's shunt to VDD.
- To dim the LEDs by PWM dimming, connect the function generator to the PWM pin of JP3.

7 TPS61199EVM-598 Assembly Drawings and Layout

The following figures (Figure 3 through Figure 5) show the design of the TPS61199EVM-598

© 2010, Texas Instruments Incorporated

printed-circuit board (PCB). The EVM has been designed using a two-layer, 2-oz, copper-clad circuit board, 52.070 mm × 93.345 mm, with all components on the top side and all active traces to the top and bottom layers to allow the user to easily view, probe, and evaluate the TPS61199 control IC in a practical, double-sided application. Moving components to both sides of the PCB or using additional internal layers can offer additional size reduction for space-constrained systems.

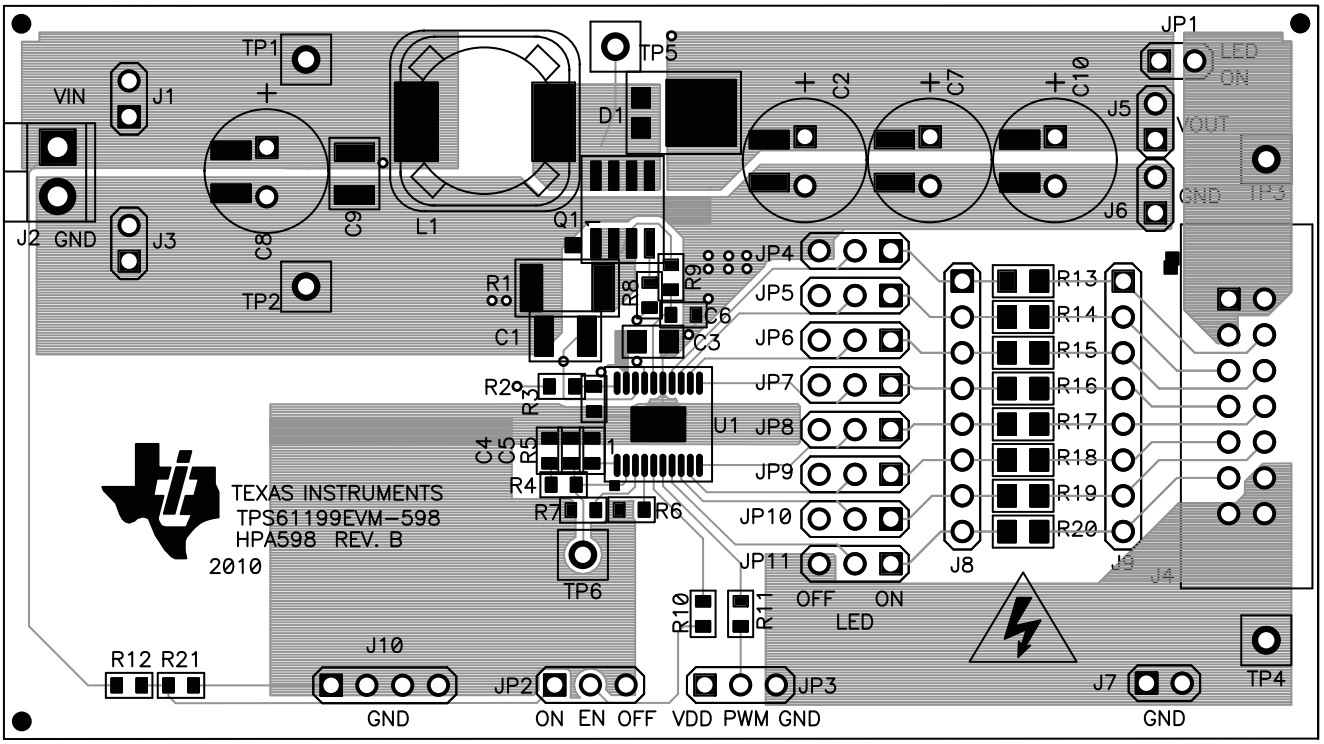

Figure 3. TPS61199EVM-598 Component Placement, Viewed From Top

© 2010, Texas Instruments Incorporated

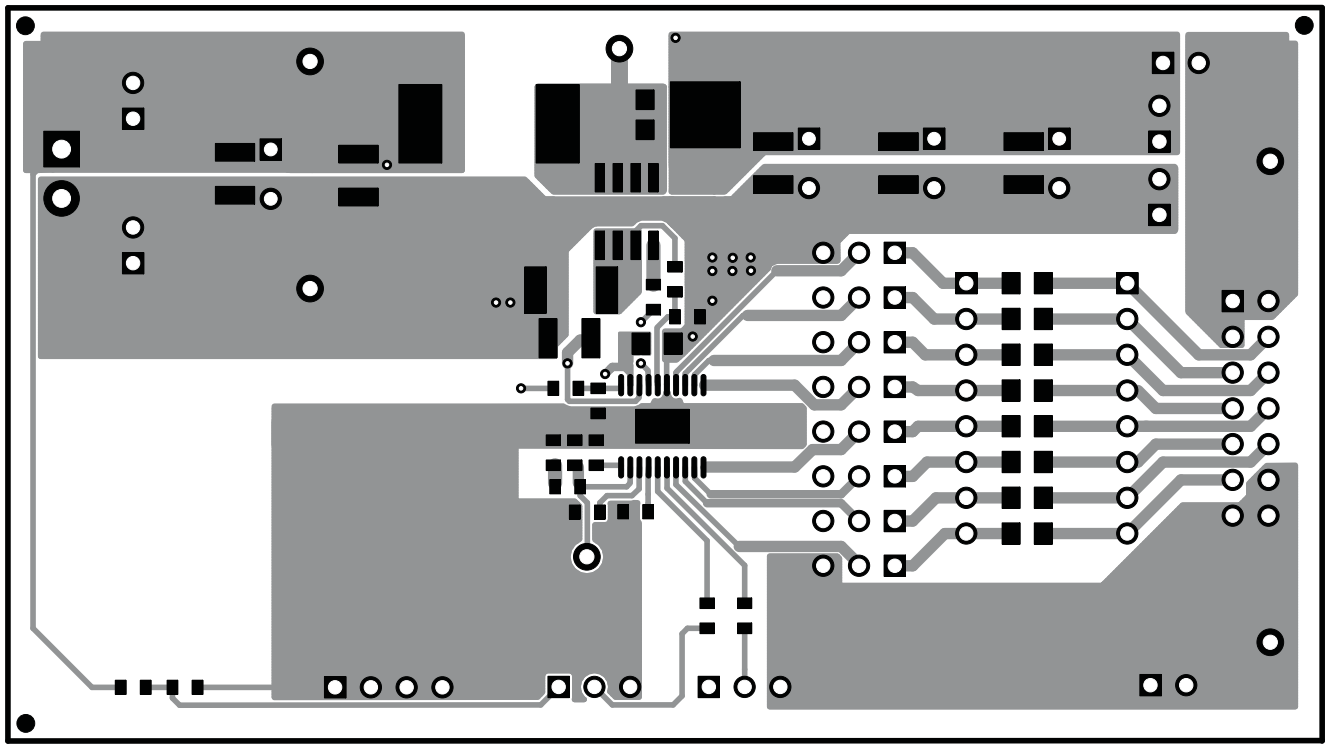

Figure 4. TPS61199EVM-598 Top Copper, Viewed From Top

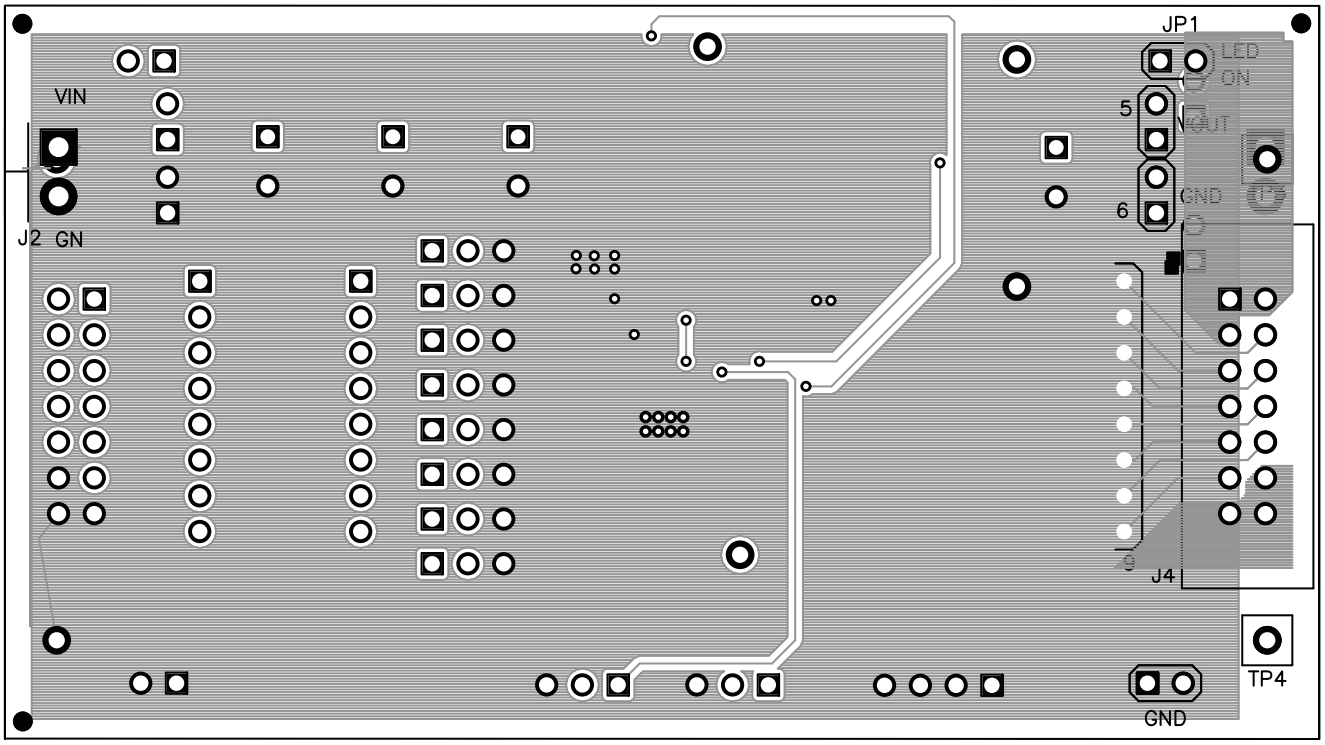

Figure 5. TPS61199EVM-598 Bottom Copper, Viewed From Bottom

© 2010, Texas Instruments Incorporated

Evaluation Board/Kit Important Notice

Texas Instruments (TI) provides the enclosed product(s) under the following conditions:

This evaluation board/kit is intended for use for **ENGINEERING DEVELOPMENT, DEMONSTRATION, OR EVALUATION PURPOSES ONLY** and is not considered by TI to be a finished end-product fit for general consumer use. Persons handling the product(s) must have electronics training and observe good engineering practice standards. As such, the goods being provided are not intended to be complete in terms of required design-, marketing-, and/or manufacturing-related protective considerations, including product safety and environmental measures typically found in end products that incorporate such semiconductor components or circuit boards. This evaluation board/kit does not fall within the scope of the European Union directives regarding electromagnetic compatibility, restricted substances (RoHS), recycling (WEEE), FCC, CE or UL, and therefore may not meet the technical requirements of these directives or other related directives.

Should this evaluation board/kit not meet the specifications indicated in the User's Guide, the board/kit may be returned within 30 days from the date of delivery for a full refund. THE FOREGOING WARRANTY IS THE EXCLUSIVE WARRANTY MADE BY SELLER TO BUYER AND IS IN LIEU OF ALL OTHER WARRANTIES, EXPRESSED, IMPLIED, OR STATUTORY, INCLUDING ANY WARRANTY OF MERCHANTABILITY OR FITNESS FOR ANY PARTICULAR PURPOSE.

The user assumes all responsibility and liability for proper and safe handling of the goods. Further, the user indemnifies TI from all claims arising from the handling or use of the goods. Due to the open construction of the product, it is the user's responsibility to take any and all appropriate precautions with regard to electrostatic discharge.

EXCEPT TO THE EXTENT OF THE INDEMNITY SET FORTH ABOVE, NEITHER PARTY SHALL BE LIABLE TO THE OTHER FOR ANY INDIRECT, SPECIAL, INCIDENTAL, OR CONSEQUENTIAL DAMAGES.

TI currently deals with a variety of customers for products, and therefore our arrangement with the user **is not exclusive.**

TI assumes **no liability for applications assistance, customer product design, software performance, or infringement of patents or services described herein.**

Please read the User's Guide and, specifically, the Warnings and Restrictions notice in the User's Guide prior to handling the product. This notice contains important safety information about temperatures and voltages. For additional information on TI's environmental and/or safety programs, please contact the TI application engineer or visit www.ti.com/esh.

No license is granted under any patent right or other intellectual property right of TI covering or relating to any machine, process, or combination in which such TI products or services might be or are used.

FCC Warning

This evaluation board/kit is intended for use for **ENGINEERING DEVELOPMENT, DEMONSTRATION, OR EVALUATION PURPOSES ONLY** and is not considered by TI to be a finished end-product fit for general consumer use. It generates, uses, and can radiate radio frequency energy and has not been tested for compliance with the limits of computing devices pursuant to part 15 of FCC rules, which are designed to provide reasonable protection against radio frequency interference. Operation of this equipment in other environments may cause interference with radio communications, in which case the user at his own expense will be required to take whatever measures may be required to correct this interference.

EVM Warnings and Restrictions

It is important to operate this EVM within the input voltage range of 8 V to 30 V and the output voltage range of 0 V to 100 V .

Exceeding the specified input range may cause unexpected operation and/or irreversible damage to the EVM. If there are questions concerning the input range, please contact a TI field representative prior to connecting the input power.

Applying loads outside of the specified output range may result in unintended operation and/or possible permanent damage to the EVM. Please consult the EVM User's Guide prior to connecting any load to the EVM output. If there is uncertainty as to the load specification, please contact a TI field representative.

During normal operation, some circuit components may have case temperatures greater than 150° C. The EVM is designed to operate properly with certain components above 150° C as long as the input and output ranges are maintained. These components include but are not limited to linear regulators, switching transistors, pass transistors, and current sense resistors. These types of devices can be identified using the EVM schematic located in the EVM User's Guide. When placing measurement probes near these devices during operation, please be aware that these devices may be very warm to the touch.

Mailing Address: Texas Instruments, Post Office Box 655303, Dallas, Texas 75265
Copyright © 2011, Texas Instruments Incorporated

IMPORTANT NOTICE

Texas Instruments Incorporated and its subsidiaries (TI) reserve the right to make corrections, modifications, enhancements, improvements, and other changes to its products and services at any time and to discontinue any product or service without notice. Customers should obtain the latest relevant information before placing orders and should verify that such information is current and complete. All products are sold subject to TI's terms and conditions of sale supplied at the time of order acknowledgment.

TI warrants performance of its hardware products to the specifications applicable at the time of sale in accordance with TI's standard warranty. Testing and other quality control techniques are used to the extent TI deems necessary to support this warranty. Except where mandated by government requirements, testing of all parameters of each product is not necessarily performed.

TI assumes no liability for applications assistance or customer product design. Customers are responsible for their products and applications using TI components. To minimize the risks associated with customer products and applications, customers should provide adequate design and operating safeguards.

TI does not warrant or represent that any license, either express or implied, is granted under any TI patent right, copyright, mask work right, or other TI intellectual property right relating to any combination, machine, or process in which TI products or services are used. Information published by TI regarding third-party products or services does not constitute a license from TI to use such products or services or a warranty or endorsement thereof. Use of such information may require a license from a third party under the patents or other intellectual property of the third party, or a license from TI under the patents or other intellectual property of TI.

Reproduction of TI information in TI data books or data sheets is permissible only if reproduction is without alteration and is accompanied by all associated warranties, conditions, limitations, and notices. Reproduction of this information with alteration is an unfair and deceptive business practice. TI is not responsible or liable for such altered documentation. Information of third parties may be subject to additional restrictions.

Resale of TI products or services with statements different from or beyond the parameters stated by TI for that product or service voids all express and any implied warranties for the associated TI product or service and is an unfair and deceptive business practice. TI is not responsible or liable for any such statements.

TI products are not authorized for use in safety-critical applications (such as life support) where a failure of the TI product would reasonably be expected to cause severe personal injury or death, unless officers of the parties have executed an agreement specifically governing such use. Buyers represent that they have all necessary expertise in the safety and regulatory ramifications of their applications, and acknowledge and agree that they are solely responsible for all legal, regulatory and safety-related requirements concerning their products and any use of TI products in such safety-critical applications, notwithstanding any applications-related information or support that may be provided by TI. Further, Buyers must fully indemnify TI and its representatives against any damages arising out of the use of TI products in such safety-critical applications.

TI products are neither designed nor intended for use in military/aerospace applications or environments unless the TI products are specifically designated by TI as military-grade or "enhanced plastic." Only products designated by TI as military-grade meet military specifications. Buyers acknowledge and agree that any such use of TI products which TI has not designated as military-grade is solely at the Buyer's risk, and that they are solely responsible for compliance with all legal and regulatory requirements in connection with such use.

TI products are neither designed nor intended for use in automotive applications or environments unless the specific TI products are designated by TI as compliant with ISO/TS 16949 requirements. Buyers acknowledge and agree that, if they use any non-designated products in automotive applications, TI will not be responsible for any failure to meet such requirements.

Following are URLs where you can obtain information on other Texas Instruments products and application solutions:

Products		**Applications**	
Amplifiers	amplifier.ti.com	Audio	www.ti.com/audio
Data Converters	dataconverter.ti.com	Automotive	www.ti.com/automotive
DLP® Products	www.dlp.com	Communications and Telecom	www.ti.com/communications
DSP	dsp.ti.com	Computers and Peripherals	www.ti.com/computers
Clocks and Timers	www.ti.com/clocks	Consumer Electronics	www.ti.com/consumer-apps
Interface	interface.ti.com	Energy	www.ti.com/energy
Logic	logic.ti.com	Industrial	www.ti.com/industrial
Power Mgmt	power.ti.com	Medical	www.ti.com/medical
Microcontrollers	microcontroller.ti.com	Security	www.ti.com/security
RFID	www.ti-rfid.com	Space, Avionics & Defense	www.ti.com/space-avionics-defense
RF/IF and ZigBee® Solutions	www.ti.com/lprf	Video and Imaging	www.ti.com/video
		Wireless	www.ti.com/wireless-apps

Mailing Address: Texas Instruments, Post Office Box 655303, Dallas, Texas 75265
Copyright © 2010, Texas Instruments Incorporated