TPS61088Q1EVM-037 Evaluation Module User's Guide

This user's guide describes the characteristics, operation, and the use of the TPS61088Q1EVM-037 evaluation module (EVM). The EVM contains the TPS61088Q1, which is a high performance, high efficiency synchronous boost converter with 10 A switch current. The user's guide includes EVM specifications, recommended test setup, test result, schematic diagram, bill of materials, and the board layout.

Contents

1 Introduction 2
1.1 Performance specification 2
1.2 Modification 2
1.3 Input capacitor 2
1.4 Output Capacitor Selection 2
2 Setup 3
2.1 Input/Output Connector Descriptions 3
3 Schematic, Bill of Materials, and Board Layout 4
3.1 Schematic 4
3.2 Bill of Materials 4
3.3 Board Layout 6

List of Figures

1 TPS61088Q1EVM-037 Schematic 4
2 TPS61088Q1EVM-037 Top-Side Layout 6
3 TPS61088Q1EVM-037 Bottom-Side Layout 7
4 TPS61088Q1EVM-037 Inner Layer 1 Layout 8
5 TPS61088Q1EVM-037 Inner Layer 2 Layout 9

List of Tables

1 Performance Specification Summary 2
2 TPS61088Q1EVM-037 Bill of Materials 5

Trademarks

All trademarks are the property of their respective owners.

Copyright © 2018, Texas Instruments Incorporated

1 Introduction

1.1 Performance specification

Table 1 provides a summary of the TPS61088Q1 EVM performance specifications. All specifications are given for an ambient temperature of 25°C.

Table 1. Performance Specification Summary

SPECIFICATION	TEST CONDITIONS	MIN TYP MAX	UNIT
VIN		3.0, 3.6, 5	V
VOUT	TPS61088Q1EVM, VIN = 3.3 V, Io ≤ 2 A, fsw = 400 KHz	8.7, 9, 9.3	V

1.2 Modification

The printed-circuit board (PCB) for this EVM is designed to accommodate some modifications by the user. The external component can be changed according to the real application.

1.3 Input capacitor

A 100-uF tantalum capacitor C1 is added as the input capacitor in the EVM. The ESR of the tantalum capacitor is 0.1 Ω which helps to damp the ringing of the input voltage when the EVM is powered by a power supply with a long cable. The capacitor is not required for proper operation and can be removed in a real application.

1.4 Output Capacitor Selection

Four 22-uF ceramic capacitors C4, C5, C6 and C7 are added as the output capacitors. These capacitors can ensure the low output ripple at heavy load.

Copyright © 2018, Texas Instruments Incorporated

2 Setup

This section describes how to properly connect, set up, and use the TPS61088Q1EVM-037.

2.1 Input/Output Connector Descriptions

J1-VIN: Positive input connection from the input supply for the EVM

J2-GND: Return connection from the input supply for the EVM

J3-VOUT: Positive connection for the output voltage

J4-GND: Return connection for the output voltage

Copyright © 2018, Texas Instruments Incorporated

3 Schematic, Bill of Materials, and Board Layout

This section provides the TPS61088Q1EVM-037 schematic, bill of materials (BOM), and board layout.

3.1 Schematic

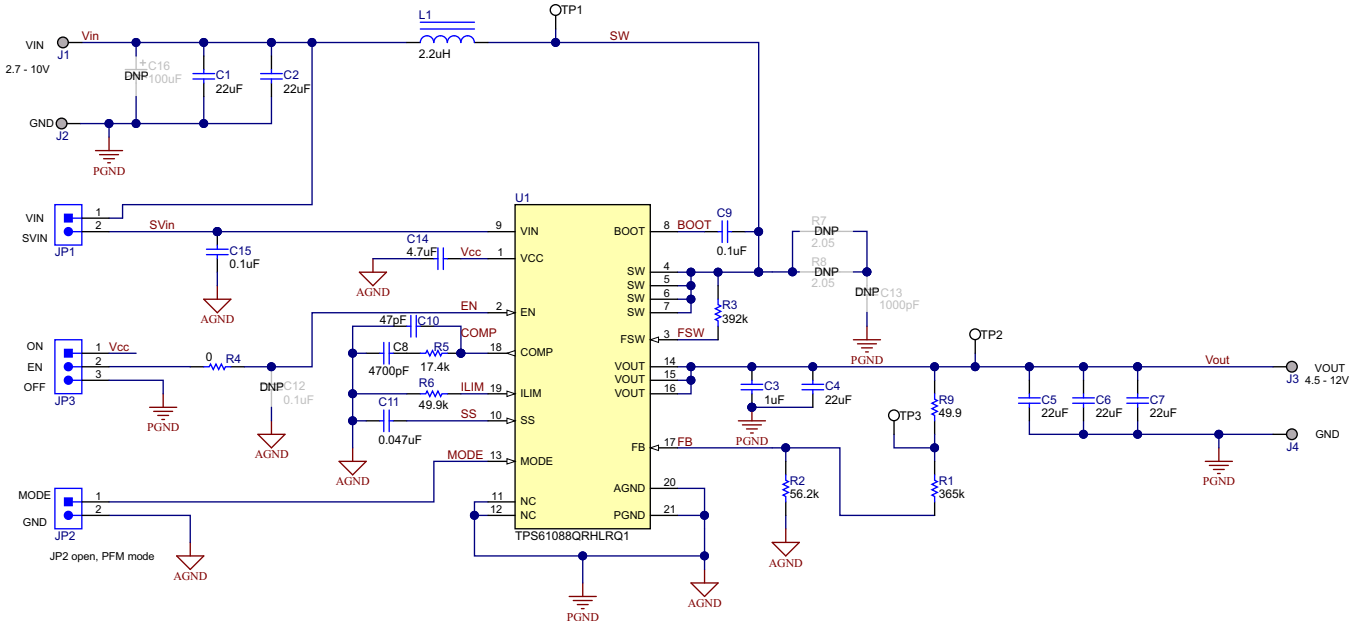

Figure 1. TPS61088Q1EVM-037 Schematic

3.2 Bill of Materials

Copyright © 2018, Texas Instruments Incorporated

Table 2. TPS61088Q1EVM-037 Bill of Materials

Designator	QTY	Value	Description	Package	PartNumber	MFG
C1, C2	2	22 uF	CAP, CERM, 22 µF, 16 V,+/- 10%, X5R, 1206	1206	GRM31CR61C226KE15L	MuRata
C3	1	1 uF	CAP, CERM, 1 µF, 25 V, +/- 10%, X7R, 0603	0603	GRM188R71E105KA12D	MuRata
C4, C5, C6, C7	4	22 uF	CAP, CERM, 22 µF, 25 V,+/- 10%, X7R, 1210	1210	GRM32ER71E226KE15L	MuRata
C8	1	4700 pF	CAP, CERM, 4700 pF, 50 V, +/- 10%, X5R, 0402	0402	GRM155R61H472KA01D	MuRata
C9, C15	2	0.1 uF	CAP, CERM, 0.1 uF, 16 V, +/-10%, X5R, 0402	0402	GRM155R61C104KA88D	MuRata
C10	1	47 pF	CAP, CERM, 47 pF, 50 V, +/- 1%, C0G, 0402	0402	GRM1555C1H470FA01D	MuRata
C11	1	0.047 uF	CAP, CERM, 0.047 µF, 16 V, +/- 10%, X7R, 0402	0402	GRM155R71C473KA01D	MuRata
C14	1	4.7 uF	CAP, CERM, 4.7 uF, 10 V, +/-10%, X5R, 0603	0603	0603ZD475KAT2A	AVX
J1, J2, J3, J4	4	Double	Terminal, Turret, TH, Double	Keystone1502-2	1502-2	Keystone
JP1, JP2	2		Header, 100 mil, 2x1, Tin, TH	Header, 2 PIN, 100mil, Tin	PEC02SAAN	Sullins Connector Solutions
JP3	1		Header, 100 mil, 3x1, Tin, TH	Header, 3 PIN, 100mil, Tin	PEC03SAAN	Sullins Connector Solutions
L1	1	2.2 uH	Inductor, Shielded, Composite, 2.2 µH, 12.7 A, 0.012 ohm, SMD	IND_6.4x3.1x6.6	XAL6030-222MEB	Coilcraft
R9	1	49.9	RES, 49.9 ohm, 1%, 0.063 W, 0402	0402	CRCW040249R9FKED	Vishay-Dale
R1	1	365 k	RES, 365 k, 1%, 0.063 W, 0402	0402	CRCW0402365KFKED	Vishay-Dale
R2	1	56.2 k	RES, 56.2 k, 1%, 0.063 W, 0402	0402	CRCW040256K2FKED	Vishay-Dale
R3	1	392 k	RES, 392 k, 1%, 0.063 W, 0402	0402	CRCW0402392KFKED	Vishay-Dale
R4	1	0	RES, 0 ohm, 5%, 0.063 W, 0402	0402	RC0402JR-070RL	Yageo America
R5	1	17.4 k	RES, 17.4 k ohm, 1%, 0.063 W, 0402	0402	CRCW040217K4FKED	Vishay-Dale
R6	1	49.9 k	RES, 49.9 k, 1%, 0.063 W, 0402	0402	CRCW040249K9FKED	Vishay-Dale
U1	1		10-A Fully-Integrated Synchronous Boost Converter, RHL0020A (VQFN-20)	RHL0020A	TPS61088QRHLRQ1	Texas Instruments
C16	0	100 uF	CAP, TA, 100 µF, 16 V, +/- 10%, 0.1 ohm, SMD	7343-43	T495X107K016ATE100	Kemet
C12	0	0.1 uF	CAP, CERM, 0.1 uF, 16 V, +/-10%, X5R, 0402	0402	GRM155R61C104KA88D	MuRata
C13	0	1000 pF	CAP, CERM, 1000 pF, 100 V, +/- 10%, X7R, 0603	0603	GRM188R72A102KA01D	MuRata
R7, R8	0	2.05	RES, 2.05, 1%, 0.1 W, 0603	0603	CRCW06032R05FKEA	Vishay-Dale

Copyright © 2018, Texas Instruments Incorporated

3.3 Board Layout

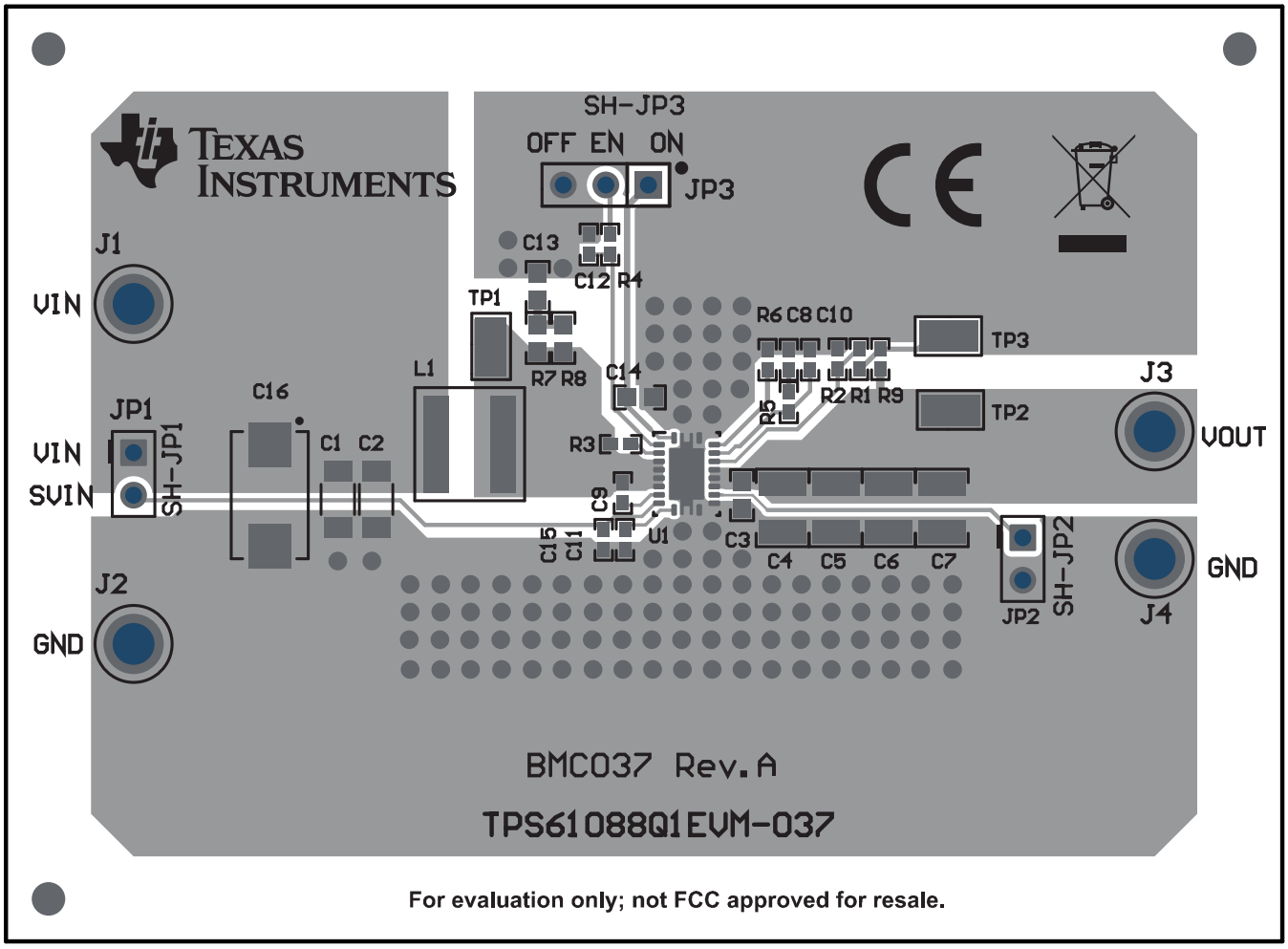

Figure 2. TPS61088Q1EVM-037 Top-Side Layout

Copyright © 2018, Texas Instruments Incorporated

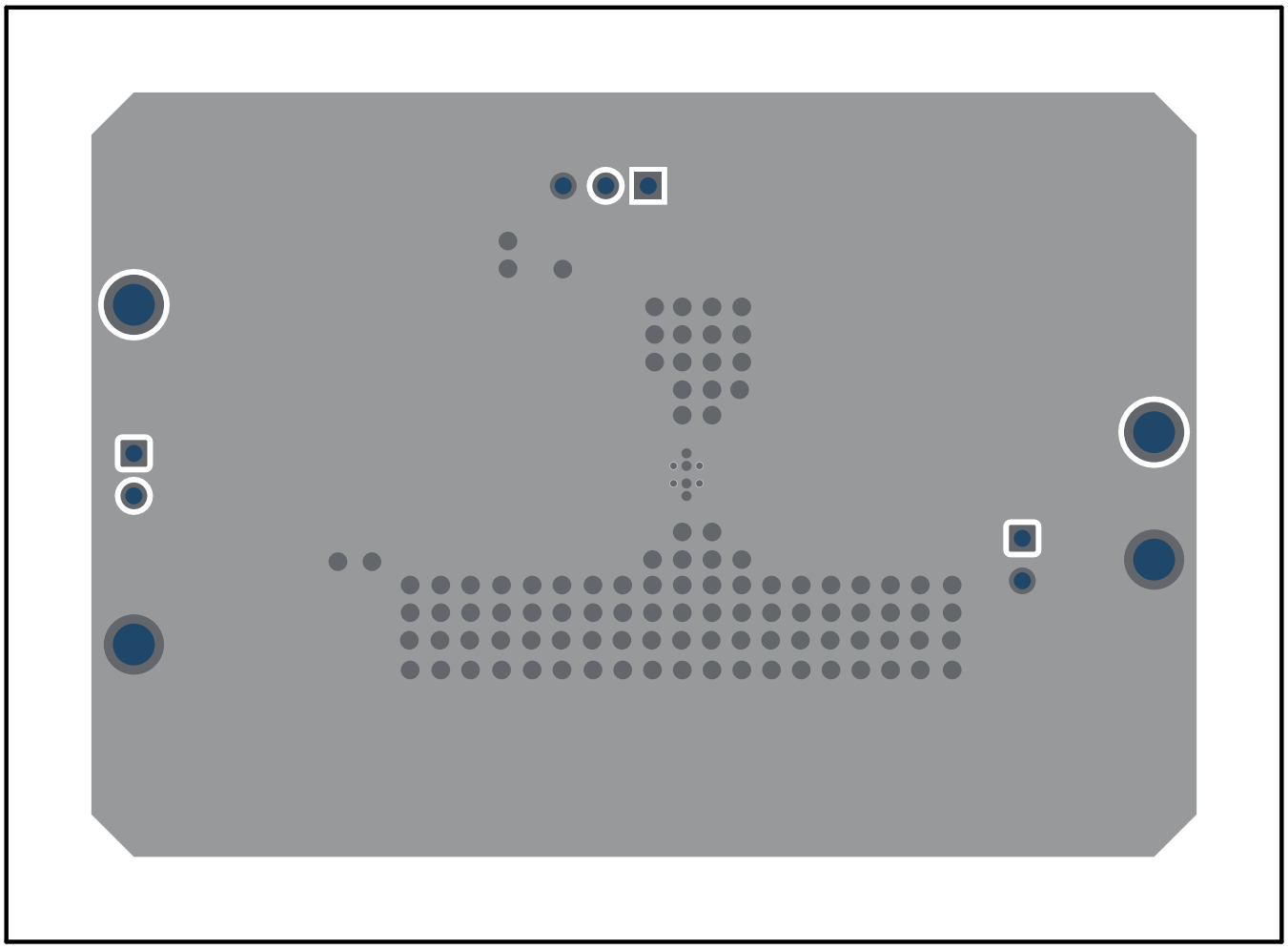

Figure 3. TPS61088Q1EVM-037 Bottom-Side Layout

Copyright © 2018, Texas Instruments Incorporated

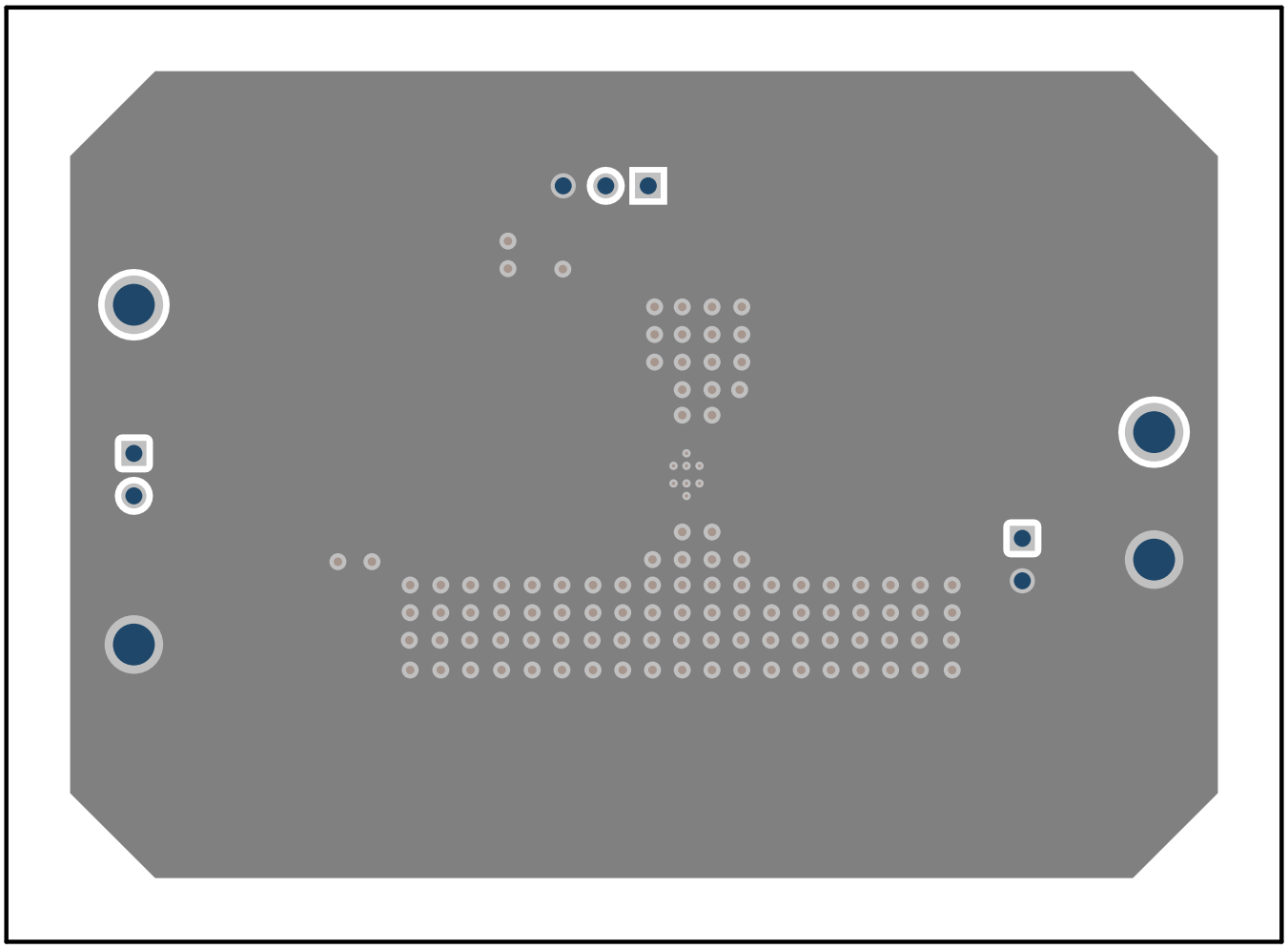

Figure 4. TPS61088Q1EVM-037 Inner Layer 1 Layout

Copyright © 2018, Texas Instruments Incorporated

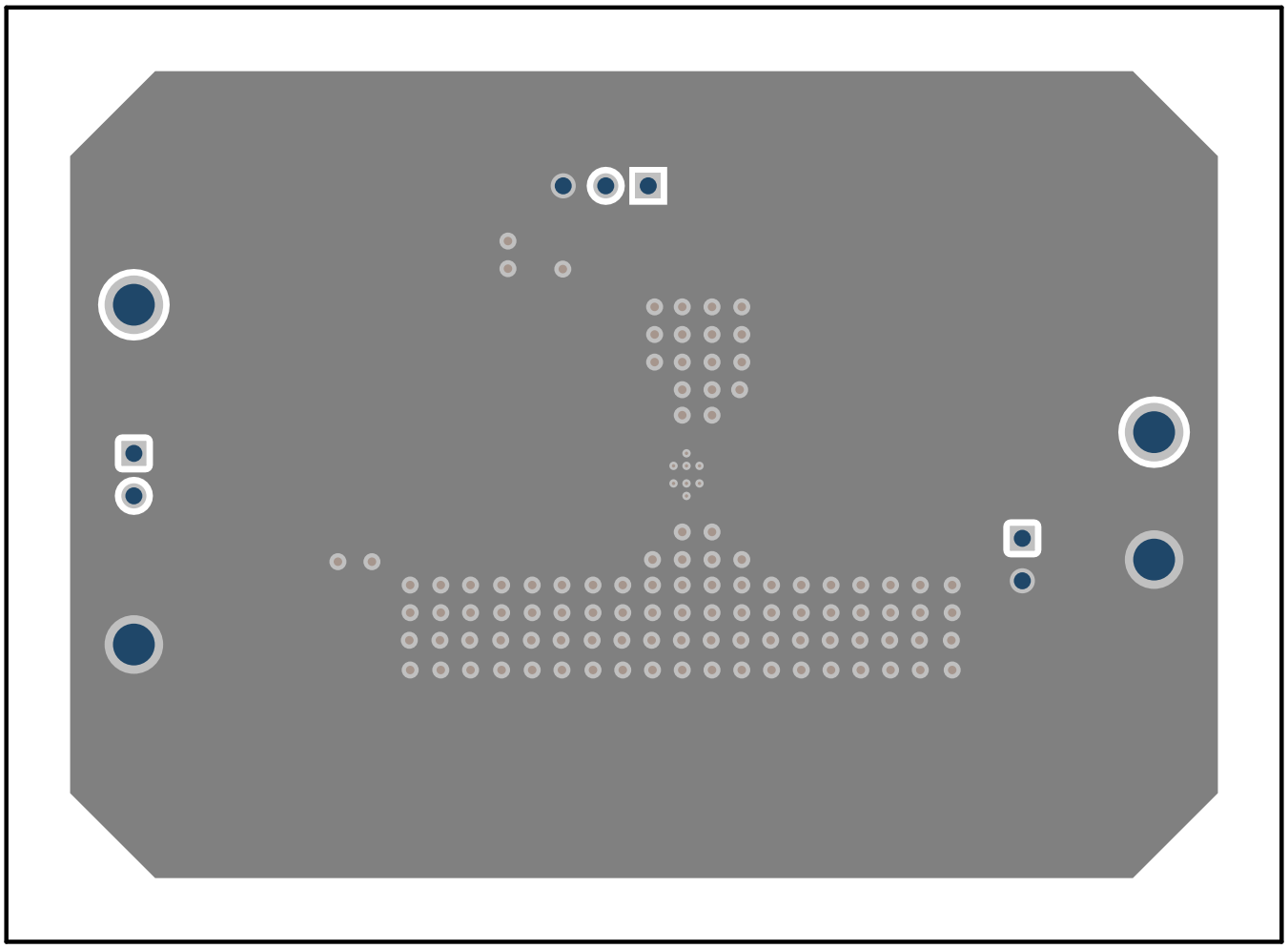

Figure 5. TPS61088Q1EVM-037 Inner Layer 2 Layout

Copyright © 2018, Texas Instruments Incorporated

IMPORTANT NOTICE AND DISCLAIMER

TI PROVIDES TECHNICAL AND RELIABILITY DATA (INCLUDING DATASHEETS), DESIGN RESOURCES (INCLUDING REFERENCE DESIGNS), APPLICATION OR OTHER DESIGN ADVICE, WEB TOOLS, SAFETY INFORMATION, AND OTHER RESOURCES “AS IS” AND WITH ALL FAULTS, AND DISCLAIMS ALL WARRANTIES, EXPRESS AND IMPLIED, INCLUDING WITHOUT LIMITATION ANY IMPLIED WARRANTIES OF MERCHANTABILITY, FITNESS FOR A PARTICULAR PURPOSE OR NON-INFRINGEMENT OF THIRD PARTY INTELLECTUAL PROPERTY RIGHTS.

These resources are intended for skilled developers designing with TI products. You are solely responsible for (1) selecting the appropriate TI products for your application, (2) designing, validating and testing your application, and (3) ensuring your application meets applicable standards, and any other safety, security, or other requirements. These resources are subject to change without notice. TI grants you permission to use these resources only for development of an application that uses the TI products described in the resource. Other reproduction and display of these resources is prohibited. No license is granted to any other TI intellectual property right or to any third party intellectual property right. TI disclaims responsibility for, and you will fully indemnify TI and its representatives against, any claims, damages, costs, losses, and liabilities arising out of your use of these resources.

TI’s products are provided subject to TI’s Terms of Sale (www.ti.com/legal/termsofsale.html) or other applicable terms available either on ti.com or provided in conjunction with such TI products. TI’s provision of these resources does not expand or otherwise alter TI’s applicable warranties or warranty disclaimers for TI products.

Mailing Address: Texas Instruments, Post Office Box 655303, Dallas, Texas 75265
Copyright © 2018, Texas Instruments Incorporated