User's Guide
SLVU241–April 2008

TPS60255EVM-262

Contents

1 Introduction 1
2 Setup 2
2.1 Input/Output Connector Descriptions 2
2.2 Equipment Requirements 3
2.3 Operation 4
3 Board Layout 6
3.1 Layout 6
4 Schematic and Bill of Materials 9
4.1 Schematic 9
4.2 Bill of Materials 10

List of Figures

1 TPS60255 Software User Interface 5
2 Assembly Layer 6
3 Top Layer Routing 7
4 Bottom Layer Routing 8
5 TPS60255EVM-262 Schematic 9

List of Tables

1 Factory EVM Jumper Settings 4
2 TPS60255EVM-262 Bill of Materials 10

1 Introduction

The Texas Instruments TPS60255EVM-262 evaluation module (EVM) helps designers evaluate the operation and performance of the TPS60255 white LED (WLED) driver for applications that are powered with one Li-ion or Li-polymer cell and require two or three separate banks of WLEDs. The TPS60255 contains a 1×/1.5× chargepump, as well as one group of four 25mA WLED current regulators, one group of two 25 mA WLED current regulators and a 80mA LED current regulator, capable of driving several WLEDs in parallel. Each group's current level is independently controllable by three independent brightness registers and five ON/OFF bits via a single-wire interface (EasyScale™)

2 Setup

This chapter describes the jumpers and connectors on the EVM, as well as how to properly connect, set up, and use the TPS60255EVM-262.

2.1 Input/Output Connector Descriptions

J1 – VIN

This is the positive input voltage connection to the converter. The EVM operates from any supply voltage between 2.7 V and 6 V. The leads to the input supply should be twisted and kept as short as possible to minimize EMI transmission and input voltage droop.

J2 – GND

This is the input return connection for the input power supply.

J3 – USB to GPIO Connector

This is the connector for the interface box. Connect the ribbon cable of the interface box to this device.

J4 – VLED ANODE

This is the anode connection when using external WLEDs. The cathode for external WLEDs can be connected to the appropriate side of jumper JP1-JP7. This connection can also be used to measure the voltage and/or voltage ripple at the VOUT pin of the device.

J5 – AUX

This is the cathode connection when using external WLEDs connected to Group C.

JP1 – DA1

JP1 is used to connect the cathode of the DA1 LED to the GA1 pin on the TPS60255. Place a shunt on JP1 to connect the WLED to the GA1 input pin. Remove the shunt and place an ammeter in series to measure the DA1 current or attach an external WLED using this jumper.

JP2 – DA2

JP2 is used to connect the cathode of the DA2 LED to the GA2 pin on the TPS60255. Place a shunt on JP2 to connect the WLED to the GA2 input pin. Remove the shunt and place an ammeter in series to measure the DA2 current or attach an external WLED using this jumper.

JP3 – DA3

JP3 is used to connect the cathode of the DA3 LED to the GA3 pin on the TPS60255. Place a shunt on JP3 to connect the WLED to the GA3 input pin. Remove the shunt and place an ammeter in series to measure the DA3 current or attach an external WLED using this jumper.

JP4 – DA4

JP4 is used to connect the cathode of the DA4 LED to the GA4 pin on the TPS60255. Place a shunt on JP4 to connect the WLED to the GA4 input pin. Remove the shunt and place an ammeter in series to measure the DA4 current or attach an external WLED using this jumper.

JP5 – DC1-DC6

JP5 is used to connect the cathode of the DC1-DC6 LEDs to the GC pin on the TPS60255. Place a shunt on JP5 to connect the DC1-DC6 WLEDs to the GC input pin. Remove the shunt and place an ammeter in series to measure the DC1-DC6 current or attach external WLEDs using this jumper.

JP6 – DB1

JP6 is used to connect the cathode of the DB1 LED to the GB1 pin on the TPS60255. Place a shunt on JP6 to connect the WLED to the DB1 input pin. Remove the shunt and place an ammeter in series to measure the DB1 current or attach an external WLED using this jumper.

JP7 – DB2

JP7 is used to connect the cathode of the DB2 LED to the GB2 pin on the TPS60255. Place a shunt on JP7 to connect the WLED to the DB2 input pin. Remove the shunt and place an ammeter in series to measure the DB2 current or attach an external WLED using this jumper.

JP8 – EN

This jumper enables the device by tying the ENA pin to VIN, if set to ON or disables the device by tying the ENA pin to GND, if set to OFF.

2.2 Equipment Requirements

In order for this EVM to operate properly, the following components must be connected and properly configured.

2.2.1 Personal Computer

A Windows based computer with a USB port is required to operate this EVM. The TPS60255 interface software, which is run on the personal computer (PC), communicates with the EVM via the PC USB port. The user sends commands to the EVM and reads the contents of the TPS60255 internal registers through the USB port.

2.2.2 USB-TO-GPIO Adapter

The HPA172 USB-TO-GPIO Adapter is the communications link between the PC and the EVM. The adapter connects to the PC with the supplied USB cable on one side and to the EVM though the supplied ribbon cable on the other. When the user writes a command to the EVM, the interface program, which is run from the PC, sends the command to the PC USB port. The adapter receives the USB command and converts the signal to the one-wire EasyScale™ protocol and sends it to the TPS60255 IC via the IF pin. The EasyScale protocol is a write only protocol, with the IC only being able to respond to the software by pulling the IF pin low to indicate it has received the signal. If the software's ACK box is checked, the software will mointor for this low signal and give an error message if it is not received.

2.2.3 Software

Texas Instruments provides software to assist the user in evaluating this EVM. To install the software, insert the enclosed CD into your computer. The software should start automatically. If it does not, go to <Start>, <Run>, and type *D:\setup.exe*, and click <OK> (assuming that D: is your CD drive). If the PC is connected to the internet, the software will automatically search for updates. Alternatively, the user can manually check the TPS60255 product folder on the TI Web site for the latest version of the software.

2.2.4 Power Supplies

The TPS60255 EVM requires one power supply set not larger than 6 V and capable of providing at least 1A for operation.

2.3 Operation

The following steps must be followed before the EVM can be operated.

1. Install the TPS60255EVM software on the PC.
2. Connect a 2.7-V to 6.0-V input power supply to the EVM.
3. Configure JP1-JP7 to the factory jumper settings in Table 1.
4. Connect the ribbon cable between the EVM and the USB-TO-GPIO (HPA172) adapter.
5. Connect the USB cable between the computer and USB-TO-GPIO adapter
6. Place JP8 to ON to enable the IC.
7. Run the TPS60255EVM software.

Table 1. Factory EVM Jumper Settings

Jumper	Shunt Location
JP1	Installed
JP2	Installed
JP3	Installed
JP4	Installed
JP5	Installed
JP6	Installed
JP7	Installed
JP8	OFF

2.3.1 TPS60255 Software Operation

A screenshot of the software is shown in Figure 1. The users can either directly change the registers or use the check boxes and drop down boxes to change the registers. Note that either the Write button for the individual registers or the Write To All Registers button must be pressed before a change to the IC is made.

2.3.1.1 Display Enable Settings

This screen section allows the user to enable/disable the different banks of LEDs using simple check boxes.

2.3.1.2 Current Level Settings

This screen section allows the user to select the LED current for each of the banks of LEDs. The LEDs installed on the EVM are rated for 30-mA dc current and may be damaged at higher currents.

2.3.1.3 General Device Settings

This screen section displays the device address. The Mode Select drop down box allows the user to set the chargepump's mode between Shutdown, 1.0× mode, 1.5× mode or to Auto select between 1.0× or 1.5× mode depending on the input voltage and LED current. Refer to the data sheet for a detailed description of the available modes.Selecting the shutdown option in this pulldown menu disables all of the LEDs and places the IC in a low-power shutdown mode.

2.3.1.4 Device Register Map

This screen section allows the user to change the registers on a bit level. When selecting a bit in the register map, the description of the bit is shown on the bottom bar of the software.

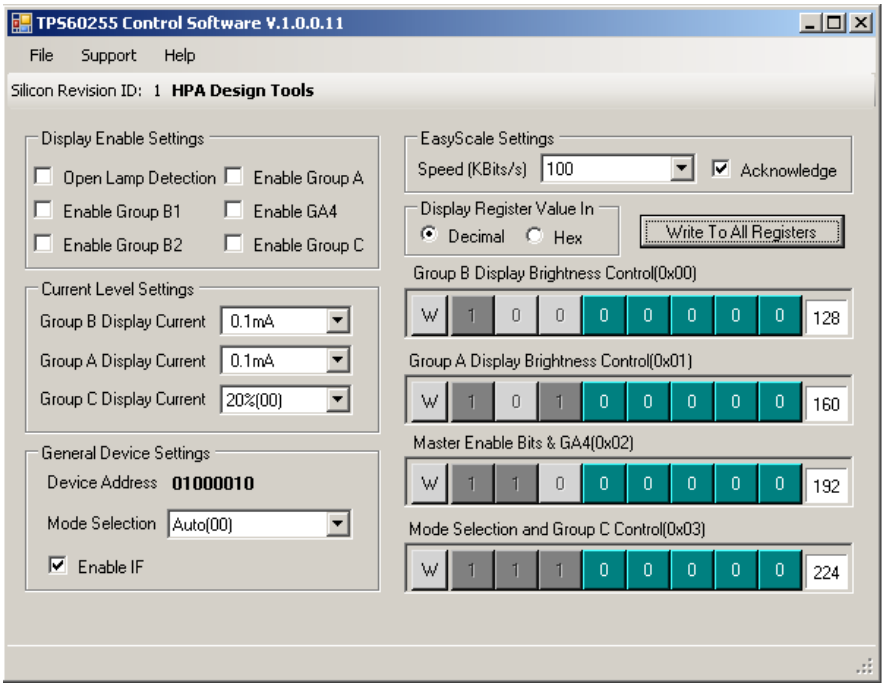

Figure 1. TPS60255 Software User Interface

3 Board Layout

This chapter provides the TPS60255EVM-262 board layout and illustrations.

3.1 Layout

Board layout is critical for all switch-mode power supplies. Figure 2 through Figure 4 show the board layout for the TPS60255EVM-262 PWB.

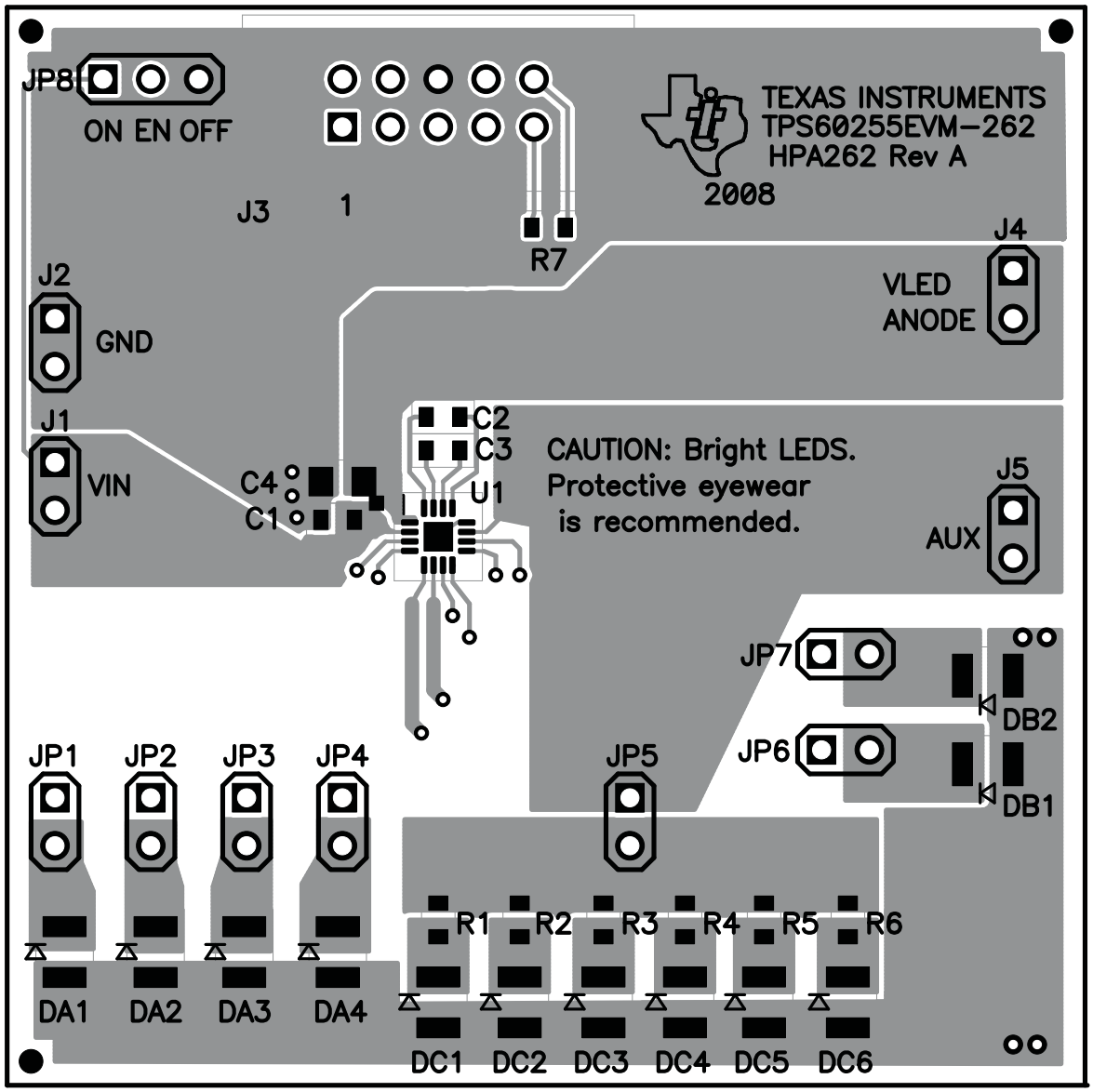

Figure 2. Assembly Layer

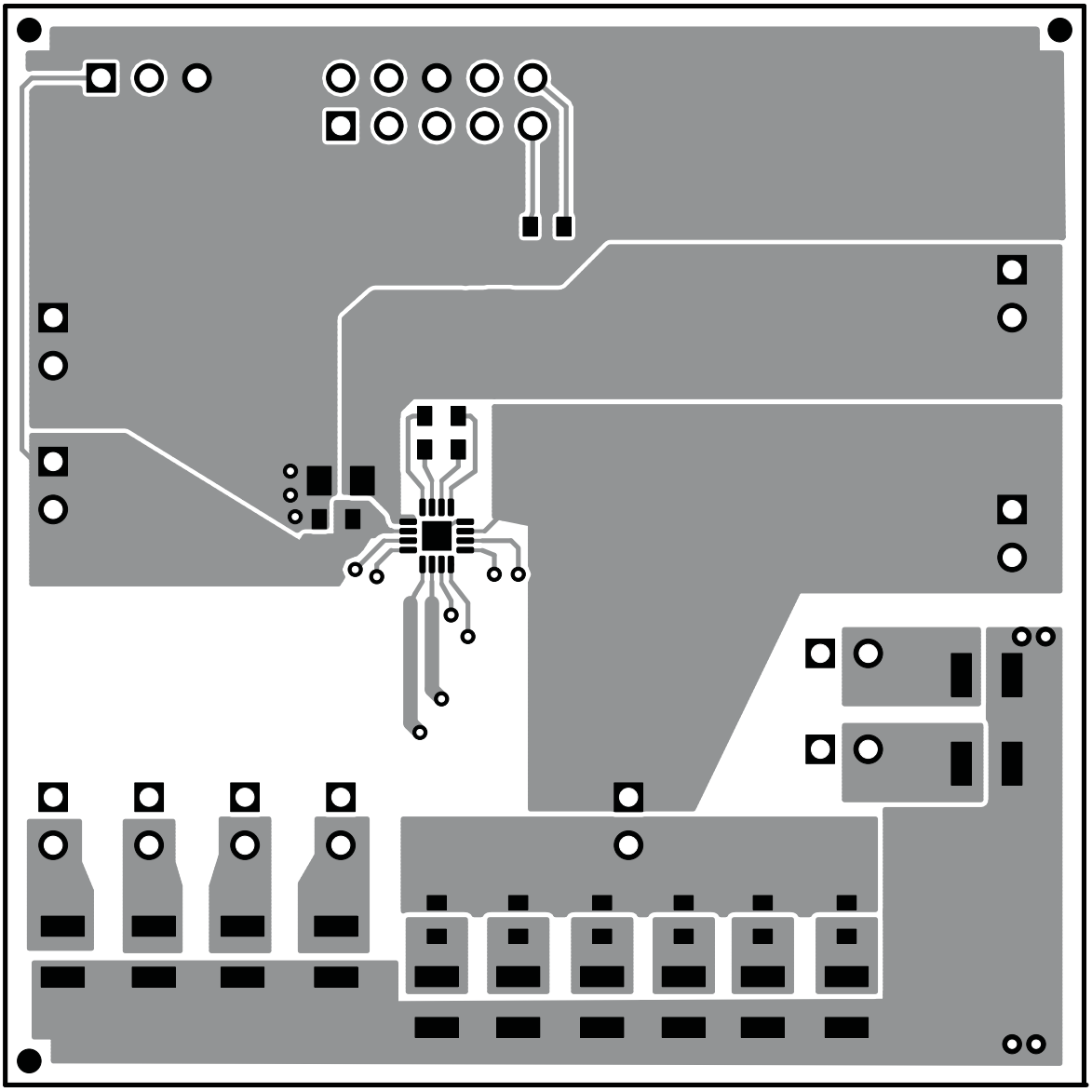

Figure 3. Top Layer Routing

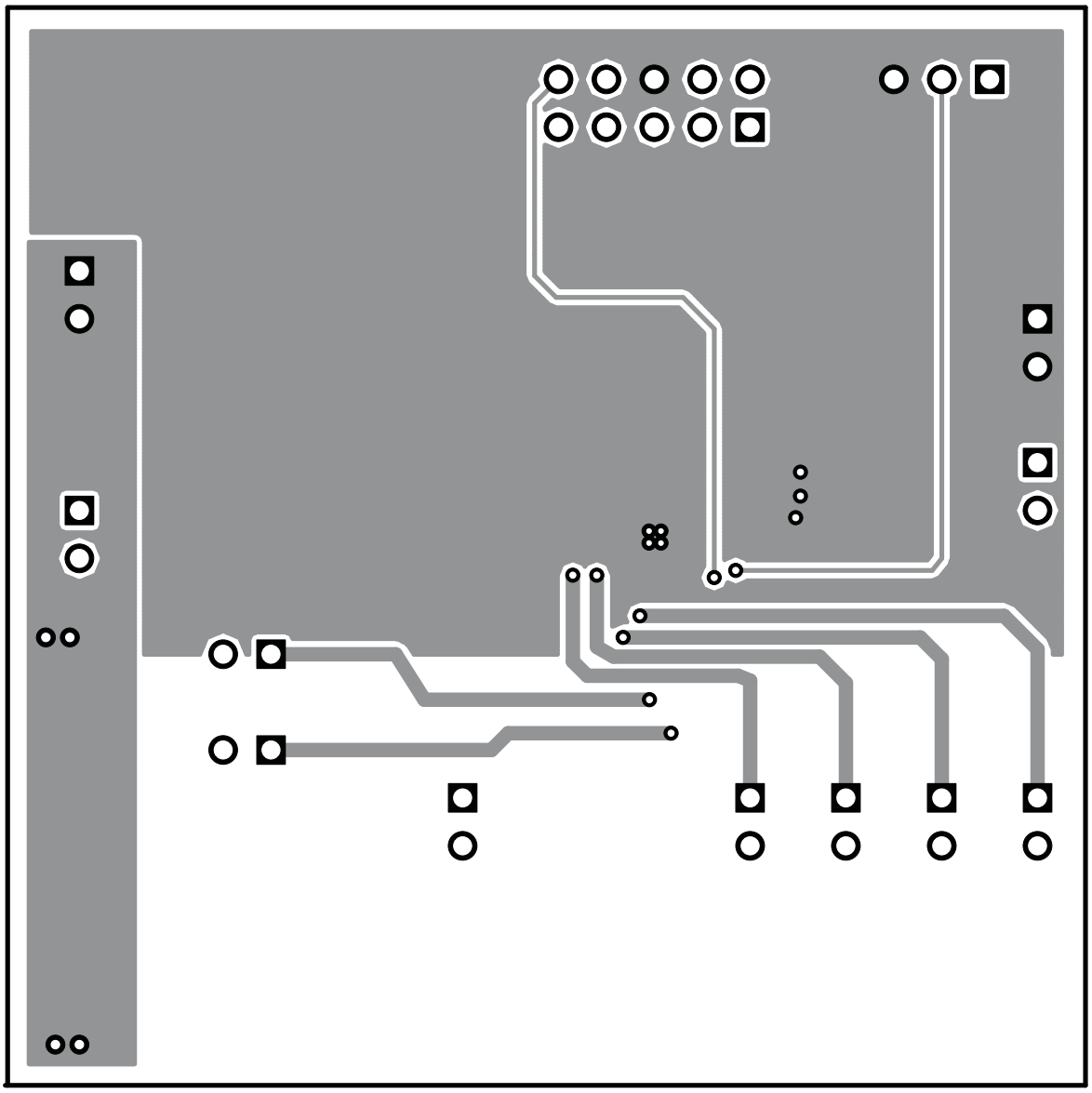

Figure 4. Bottom Layer Routing

4 Schematic and Bill of Materials

This chapter provides the TPS60255EVM-262 schematic and bill of materials.

4.1 Schematic

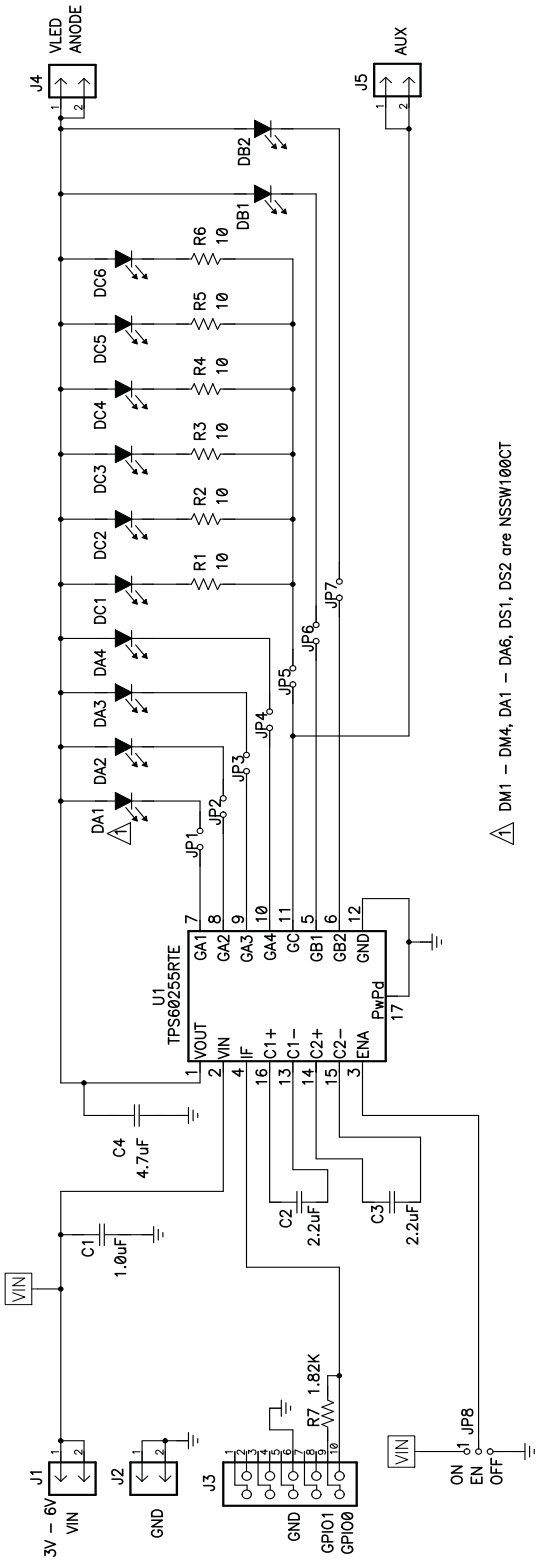

Figure 5. TPS60255EVM-262 Schematic

4.2 Bill of Materials

Table 2. TPS60255EVM-262 Bill of Materials

Count	RefDes	Value	Description	Size	Part Number	MFR
1	C1	1.0 µF	Capacitor, Ceramic, 25V, X5R, 10%	0603	GRM188R61E105KA12	Murata
2	C2, C3	2.2 µF	Capacitor, Ceramic, 10V, X5R, 10%	0603	GRM188R61A225KE34	Murata
1	C4	4.7 µF	Capacitor, Ceramic, 10V, X5R, 10%	0805	GRM21BR61A475KA73	Murata
6	DC1–DC6	NSSW100CT	Diode. LED, White	0.079 x 0.118 inch	NSSW100CT	Nichia
4	DA1–DA4	NSSW100CT	Diode. LED, White	0.079 x 0.118 inch	NSSW100CT	Nichia
2	DB1, DB2	NSSW100CT	Diode. LED, White	0.079 x 0.118 inch	NSSW100CT	Nichia
4	J1, J2, J4, J5	PTC36SAAN	Header, 2 pin, 100mil spacing, (36-pin strip)	0.100 x 2	PTC36SAAN	Sullins
1	J3	2510-6002UB	Connector, Male Straight 2x5 pin, 100mil spacing, 4 Wall	0.338 x 0.788 inch	2510-6002UB	3M
7	JP1–JP7	PTC36SAAN	Header, 2 pin, 100mil spacing, (36-pin strip)	0.100 x 2	PTC36SAAN	Sullins
1	JP8	PTC36SAAN	Header, 3 pin, 100mil spacing, (36-pin strip)	0.100 x 3	PTC36SAAN	Sullins
6	R1–R6	10	Resistor, Chip, 1/16W, 1%	0603	Std	Std
1	R7	1.82K	Resistor, Chip, 1/16W, 1%	0603	Std	Std
1	U1	TPS60255RTE	IC, High Efficiency Charge Pump for WLED Driver with EasyScale	QFN-16	TPS60255RTE	TI
1	–		PCB, 2.25 In x 2.25 In x 0.062 In		HPA262	Any
8	–		Shunt, 100mil, Black	0.1	929950-00	3M

Related Documentation From Texas Instruments

TPS60255 data sheet (SLVS825)

IMPORTANT NOTICE

Texas Instruments Incorporated and its subsidiaries (TI) reserve the right to make corrections, modifications, enhancements, improvements, and other changes to its products and services at any time and to discontinue any product or service without notice. Customers should obtain the latest relevant information before placing orders and should verify that such information is current and complete. All products are sold subject to TI's terms and conditions of sale supplied at the time of order acknowledgment.

TI warrants performance of its hardware products to the specifications applicable at the time of sale in accordance with TI's standard warranty. Testing and other quality control techniques are used to the extent TI deems necessary to support this warranty. Except where mandated by government requirements, testing of all parameters of each product is not necessarily performed.

TI assumes no liability for applications assistance or customer product design. Customers are responsible for their products and applications using TI components. To minimize the risks associated with customer products and applications, customers should provide adequate design and operating safeguards.

TI does not warrant or represent that any license, either express or implied, is granted under any TI patent right, copyright, mask work right, or other TI intellectual property right relating to any combination, machine, or process in which TI products or services are used. Information published by TI regarding third-party products or services does not constitute a license from TI to use such products or services or a warranty or endorsement thereof. Use of such information may require a license from a third party under the patents or other intellectual property of the third party, or a license from TI under the patents or other intellectual property of TI.

Reproduction of TI information in TI data books or data sheets is permissible only if reproduction is without alteration and is accompanied by all associated warranties, conditions, limitations, and notices. Reproduction of this information with alteration is an unfair and deceptive business practice. TI is not responsible or liable for such altered documentation. Information of third parties may be subject to additional restrictions.

Resale of TI products or services with statements different from or beyond the parameters stated by TI for that product or service voids all express and any implied warranties for the associated TI product or service and is an unfair and deceptive business practice. TI is not responsible or liable for any such statements.

TI products are not authorized for use in safety-critical applications (such as life support) where a failure of the TI product would reasonably be expected to cause severe personal injury or death, unless officers of the parties have executed an agreement specifically governing such use. Buyers represent that they have all necessary expertise in the safety and regulatory ramifications of their applications, and acknowledge and agree that they are solely responsible for all legal, regulatory and safety-related requirements concerning their products and any use of TI products in such safety-critical applications, notwithstanding any applications-related information or support that may be provided by TI. Further, Buyers must fully indemnify TI and its representatives against any damages arising out of the use of TI products in such safety-critical applications.

TI products are neither designed nor intended for use in military/aerospace applications or environments unless the TI products are specifically designated by TI as military-grade or "enhanced plastic." Only products designated by TI as military-grade meet military specifications. Buyers acknowledge and agree that any such use of TI products which TI has not designated as military-grade is solely at the Buyer's risk, and that they are solely responsible for compliance with all legal and regulatory requirements in connection with such use.

TI products are neither designed nor intended for use in automotive applications or environments unless the specific TI products are designated by TI as compliant with ISO/TS 16949 requirements. Buyers acknowledge and agree that, if they use any non-designated products in automotive applications, TI will not be responsible for any failure to meet such requirements.

Following are URLs where you can obtain information on other Texas Instruments products and application solutions:

Products		**Applications**	
Amplifiers	amplifier.ti.com	Audio	www.ti.com/audio
Data Converters	dataconverter.ti.com	Automotive	www.ti.com/automotive
DSP	dsp.ti.com	Broadband	www.ti.com/broadband
Clocks and Timers	www.ti.com/clocks	Digital Control	www.ti.com/digitalcontrol
Interface	interface.ti.com	Medical	www.ti.com/medical
Logic	logic.ti.com	Military	www.ti.com/military
Power Mgmt	power.ti.com	Optical Networking	www.ti.com/opticalnetwork
Microcontrollers	microcontroller.ti.com	Security	www.ti.com/security
RFID	www.ti-rfid.com	Telephony	www.ti.com/telephony
RF/IF and ZigBee® Solutions	www.ti.com/lprf	Video & Imaging	www.ti.com/video
		Wireless	www.ti.com/wireless

Mailing Address: Texas Instruments, Post Office Box 655303, Dallas, Texas 75265
Copyright © 2008, Texas Instruments Incorporated