TPS565208 4.5-V to 17-V Input, 5-A Synchronous Step-Down Voltage Regulator in SOT-23

1 Features

- 5-A Maximum Output Current
- Integrated 31-mΩ and 16-mΩ FETs
- D-CAP2™ Mode Control with Fast Transient Response
- Input Voltage Range: 4.5 V to 17 V
- Output Voltage Range: 0.76 V to 7 V
- Continuous Current Mode
- 500-kHz Switching Frequency
- Low Shutdown Current of Less than 1 µA
- 1% Feedback Voltage Accuracy
- Startup from Pre-biased Output Voltage
- Cycle-by-Cycle Current Limit
- Hiccup-mode Overcurrent Protection
- Non-Latch UVP and TSD Protections
- Fixed Soft Start: 1.0 ms
- Create a Custom Design Using the TPS565208 With the WEBENCH® Power Designer

2 Applications

- Digital TV Power Supply
- High Definition Blu-ray™ Disc Players
- Networking Home Terminal
- Digital Set Top Box (STB)
- Surveillance

Simplified Schematic

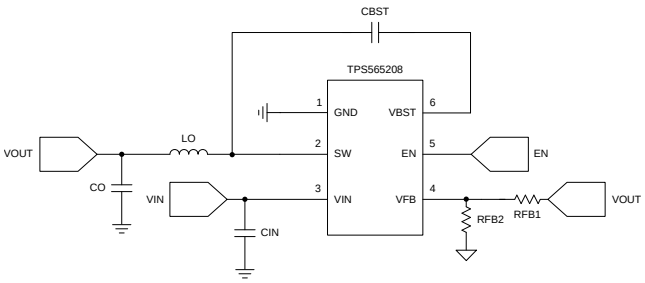

Copyright © 2017, Texas Instruments Incorporated

3 Description

The TPS565208 is a simple, easy-to-use, 5-A synchronous step-down converter in SOT-23 package.

The device is optimized to operate with minimum external component count and also optimized to achieve low standby current.

This switch mode power supply (SMPS) device employs D-CAP2™ mode control, which provides fast transient response and requires no external compensation components. D-CAP2™ also allows the use of low-equivalent series resistance (ESR) specialty polymer capacitors and ceramic capacitors.

The TPS565208 is available in a 6-pin 1.6-mm × 2.9-mm SOT (DDC) package, and operates over a –40°C to 125°C junction temperature range.

Device Information(1)

PART NUMBER	PACKAGE	BODY SIZE (NOM)
TPS565208	DDC (6)	1.60 mm × 2.90 mm

(1) For all available packages, see the orderable addendum at the end of the data sheet.

TPS565208 Load Regulation

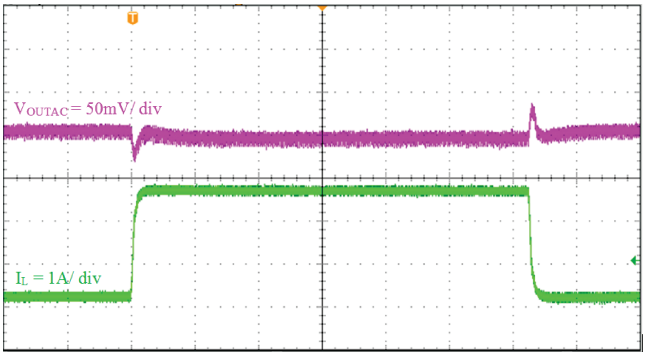

An IMPORTANT NOTICE at the end of this data sheet addresses availability, warranty, changes, use in safety-critical applications, intellectual property matters and other important disclaimers. PRODUCTION DATA.

Table of Contents

1 Features ... 1
2 Applications ... 1
3 Description ... 1
4 Revision History ... 2
5 Pin Configuration and Functions ... 3
6 Specifications ... 4
6.1 Absolute Maximum Ratings ... 4
6.2 ESD Ratings ... 4
6.3 Recommended Operating Conditions ... 4
6.4 Thermal Information ... 4
6.5 Electrical Characteristics ... 5
6.6 Typical Characteristics ... 6
7 Detailed Description ... 9
7.1 Overview ... 9
7.2 Functional Block Diagram ... 9
7.3 Feature Description ... 10
7.4 Device Functional Modes ... 11
8 Application and Implementation ... 12
8.1 Application Information ... 12
8.2 Typical Application ... 12
9 Power Supply Recommendations ... 18
10 Layout ... 19
10.1 Layout Guidelines ... 19
10.2 Layout Example ... 19
11 Device and Documentation Support ... 20
11.1 Development Support ... 20
11.2 Receiving Notification of Documentation Updates 20
11.3 Community Resources ... 20
11.4 Trademarks ... 20
11.5 Electrostatic Discharge Caution ... 20
11.6 Glossary ... 20
12 Mechanical, Packaging, and Orderable Information ... 20

4 Revision History

NOTE: Page numbers for previous revisions may differ from page numbers in the current version.

Changes from Original (September 2017) to Revision A	Page
• Initial public release.	1

Copyright © 2017, Texas Instruments Incorporated

5 Pin Configuration and Functions

DDC Package
6-Pin SOT
Top View

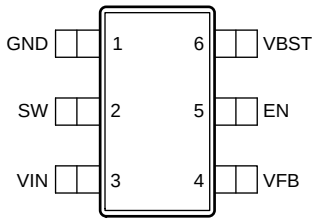

Pin Functions

PIN		I/O	DESCRIPTION
NAME	NO.		
GND	1	—	Ground pin. Source terminal of low-side power NFET as well as the ground terminal for controller circuit. Connect sensitive VFB to this GND at a single point.
SW	2	O	Switch node connection between high-side NFET and low-side NFET.
VIN	3	I	Input voltage supply pin. The drain terminal of high-side power NFET.
VFB	4	I	Converter feedback input. Connect to output voltage with feedback resistor divider.
EN	5	I	Enable input control. Active high and must be pulled up to enable the device.
VBST	6	O	Supply input for the high-side NFET gate drive circuit. Connect 0.1 µF capacitor between VBST and SW pins.

Copyright © 2017, Texas Instruments Incorporated

6 Specifications

6.1 Absolute Maximum Ratings

over operating free-air temperature range (unless otherwise noted)(1)

		MIN	MAX	UNIT
Input voltage	VIN, EN	–0.3	19	V
	VBST	–0.3	25	V
	VBST (10 ns transient)	–0.3	27	V
	VBST (vs SW)	–0.3	6.5	V
	VFB	–0.3	6.5	V
	SW	–2	19	V
	SW (10 ns transient)	–3.5	21	V
Operating junction temperature, T_J		–40	150	°C
Storage temperature, T_{stg}		–55	150	°C

(1) Stresses beyond those listed under *Absolute Maximum Ratings* may cause permanent damage to the device. These are stress ratings only, which do not imply functional operation of the device at these or any other conditions beyond those indicated under *Recommended Operating Conditions*. Exposure to absolute-maximum-rated conditions for extended periods may affect device reliability.

6.2 ESD Ratings

			VALUE	UNIT
$V_{(ESD)}$	Electrostatic discharge	Human-body model (HBM), per ANSI/ESDA/JEDEC JS-001(1)	±4000	V
		Charged-device model (CDM), per JEDEC specification JESD22-C101(2)	±1500	

(1) JEDEC document JEP155 states that 500-V HBM allows safe manufacturing with a standard ESD control process.
(2) JEDEC document JEP157 states that 250-V CDM allows safe manufacturing with a standard ESD control process.

6.3 Recommended Operating Conditions

over operating free-air temperature range (unless otherwise noted)

			MIN	NOM	MAX	UNIT
V_{IN}	Supply input voltage range		4.5		17	V
V_I	Input voltage range	VBST	–0.1		23	V
		VBST (10 ns transient)	–0.1		26	
		VBST (vs SW)	–0.1		6.0	
		EN	–0.1		17	
		VFB	–0.1		5.5	
		SW	–1.8		17	
		SW (10 ns transient)	–3.5		20	
T_J	Operating junction temperature		–40		125	°C

6.4 Thermal Information

THERMAL METRIC(1)		TPS565208 DDC (SOT) 6 PINS	UNIT
$R_{\theta JA}$	Junction-to-ambient thermal resistance	95.9	°C/W
$R_{\theta JC(top)}$	Junction-to-case (top) thermal resistance	35.6	°C/W
$R_{\theta JB}$	Junction-to-board thermal resistance	16.4	°C/W
ψ_{JT}	Junction-to-top characterization parameter	1.4	°C/W
ψ_{JB}	Junction-to-board characterization parameter	16.4	°C/W

(1) For more information about traditional and new thermal metrics, see the *Semiconductor and IC Package Thermal Metrics* application report, SPRA953.

Copyright © 2017, Texas Instruments Incorporated

6.5 Electrical Characteristics

T_J = –40°C to 125°C, V_{IN} = 12 V (unless otherwise noted)

PARAMETER		TEST CONDITIONS	MIN	TYP	MAX	UNIT
SUPPLY CURRENT						
I_{VIN}	Operating – non-switching supply current	V_{IN} current, EN = 5 V, V_{FB} = 1 V		590	780	µA
I_{VINSDN}	Shutdown supply current	V_{IN} current, EN = 0 V		0.8	5	µA
LOGIC THRESHOLD						
V_{ENH}	EN high-level input voltage		1.6			V
V_{ENL}	EN low-level input voltage				0.8	V
R_{EN}	EN pin resistance to GND	V_{EN} = 12 V	120	245	400	kΩ
V_{FB} VOLTAGE AND DISCHARGE RESISTANCE						
V_{FBTH}	V_{FB} threshold voltage		753	760	767	mV
I_{VFB}	V_{FB} input current	T_A = 25°C, V_{FB} = 0.8 V		0	±0.1	µA
MOSFET						
$R_{DS(on)h}$	High-side switch resistance	T_A = 25°C, V_{BST} – V_{SW}= 5.5 V		31		mΩ
$R_{DS(on)l}$	Low-side switch resistance	T_A = 25°C		16		mΩ
CURRENT LIMIT						
I_{OCL}	Current limit		5.3	6.7	8	A
THERMAL SHUTDOWN						
T_{SDN}	Thermal shutdown threshold(1)	Shutdown temperature		172		°C
		Hysteresis		38		
ON-TIME TIMER CONTROL						
$t_{OFF(MIN)}$	Minimum off time	V_{FB} = 0.61 V		236	280	ns
SOFT START						
t_{SS}	Soft-start time	Internal soft-start time		1.0		ms
FREQUENCY						
F_{SW}	Switching frequency	V_{IN} = 12 V, V_{OUT} = 5 V, CCM mode		500		kHz
OUTPUT UNDERVOLTAGE AND OVERVOLTAGE PROTECTION						
V_{UVP}	Output UVP threshold	Hiccup detect (H > L)		65		%
T_{HICCUP_WAIT}	Hiccup on time			1.8		ms
T_{HICCUP_RE}	Hiccup time before restart			14.9		ms
UVLO						
UVLO	UVLO threshold	Wake up VIN voltage		4.0	4.3	V
		Shutdown VIN voltage	3.3	3.6		
		Hysteresis VIN voltage(1)		0.4		

(1) Not production tested.

Copyright © 2017, Texas Instruments Incorporated

6.6 Typical Characteristics

V_{IN} = 12 V (unless otherwise noted)

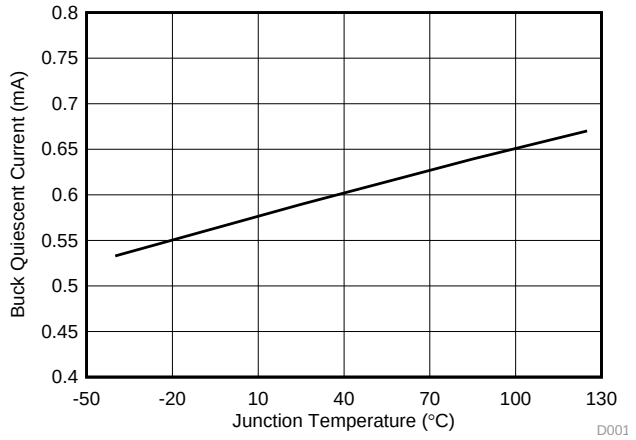

Figure 1. TPS565208 Supply Current vs Junction Temperature

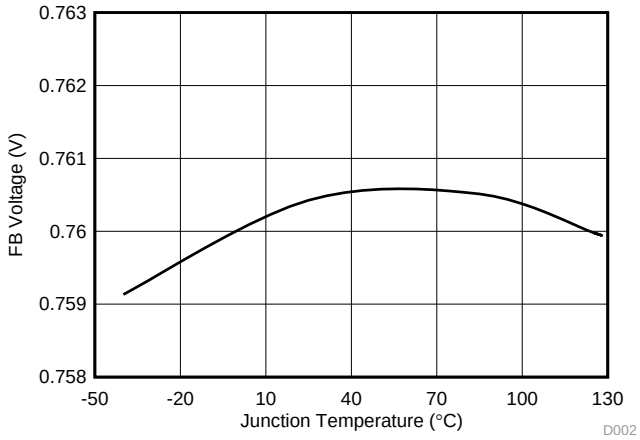

Figure 2. VFB Voltage vs Junction Temperature

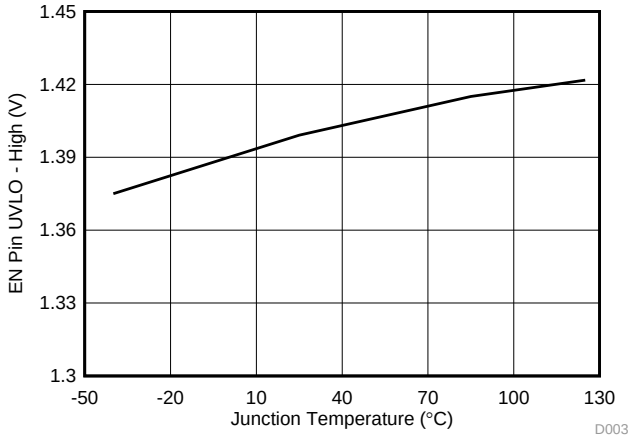

Figure 3. EN Pin UVLO Low Voltage vs Junction Temperature

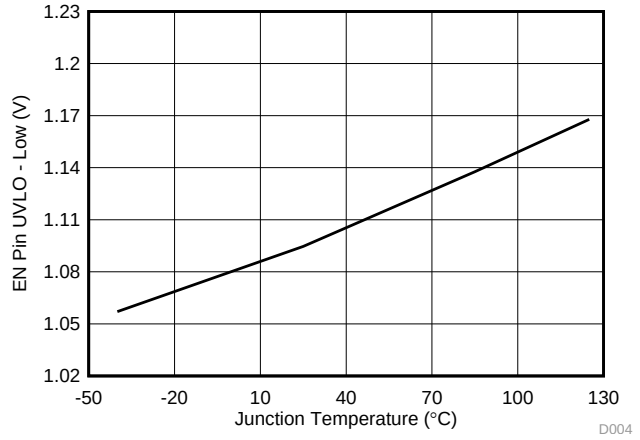

Figure 4. TPS565208 EN Pin UVLO High Voltage vs Junction Temperature

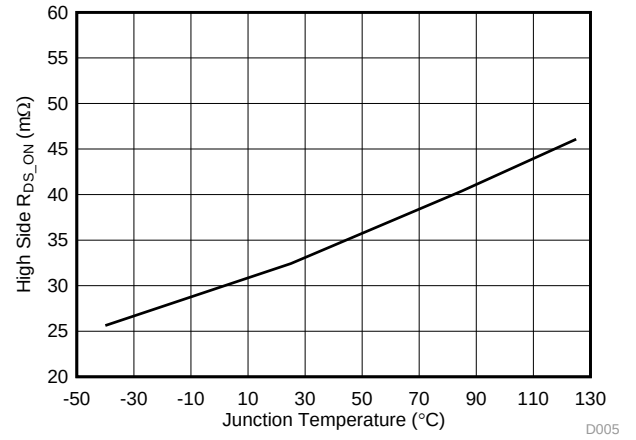

Figure 5. High-Side $R_{ds\text{-}On}$ vs Junction Temperature

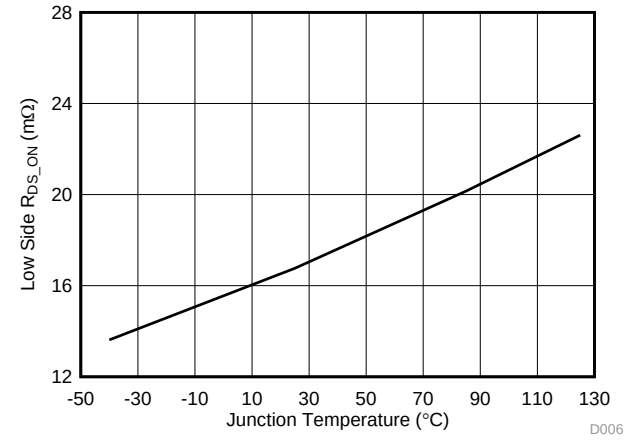

Figure 6. Low-Side $R_{ds\text{-}On}$ vs Junction Temperature

Copyright © 2017, Texas Instruments Incorporated

Typical Characteristics (continued)

V_{IN} = 12 V (unless otherwise noted)

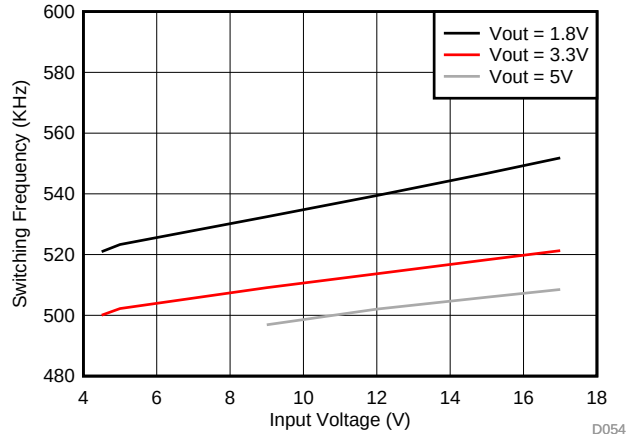

I_{OUT} = 1 A

Figure 7. TPS565208 Switching Frequency vs Input Voltage

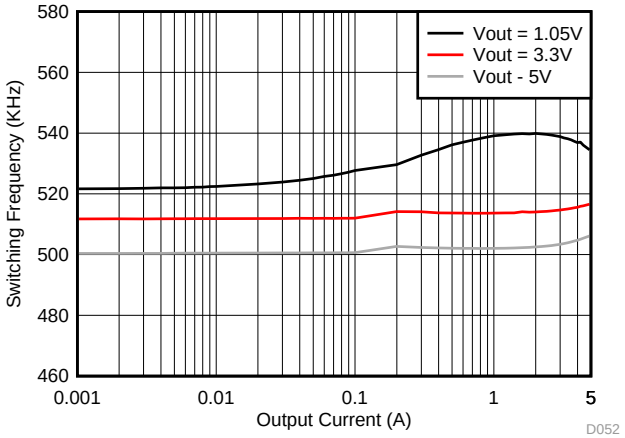

V_{IN} = 12 V

Figure 8. TPS565208 Switching Frequency vs Output Current

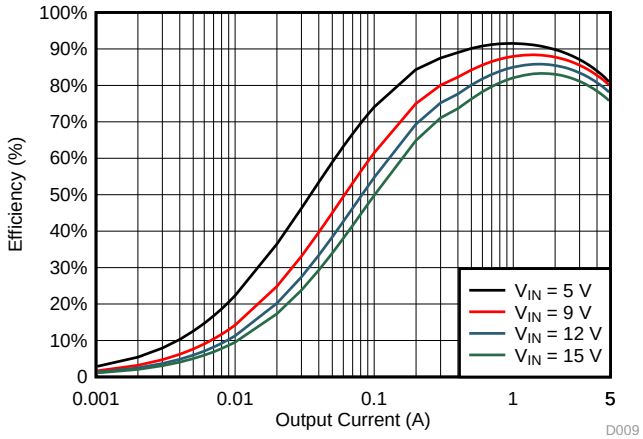

Figure 9. TPS565208 V_{OUT} = 1.05 V Efficiency, L = 2.2 µH

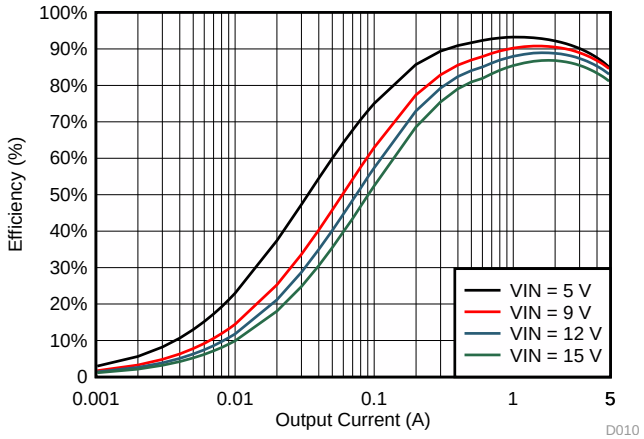

Figure 10. TPS565208 V_{OUT} = 1.5 V Efficiency, L = 2.2 µH

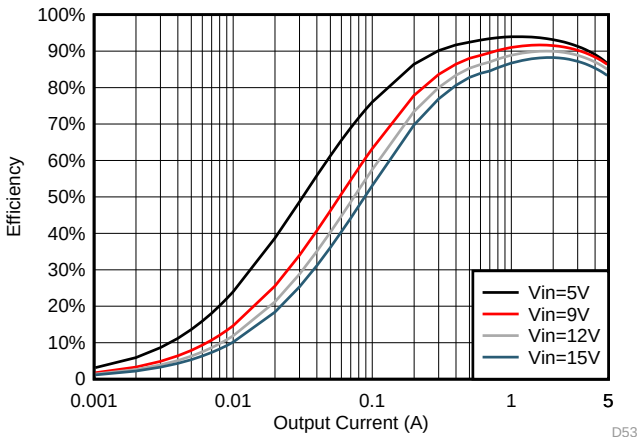

Figure 11. TPS565208 V_{OUT} = 1.8 V Efficiency, L = 2.2 µH

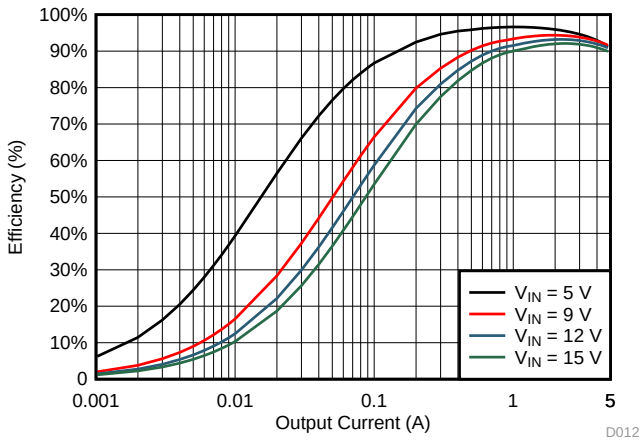

Figure 12. TPS565208 V_{OUT} = 3.3 V Efficiency, L = 2.2 µH

Copyright © 2017, Texas Instruments Incorporated

Typical Characteristics (continued)

V_{IN} = 12 V (unless otherwise noted)

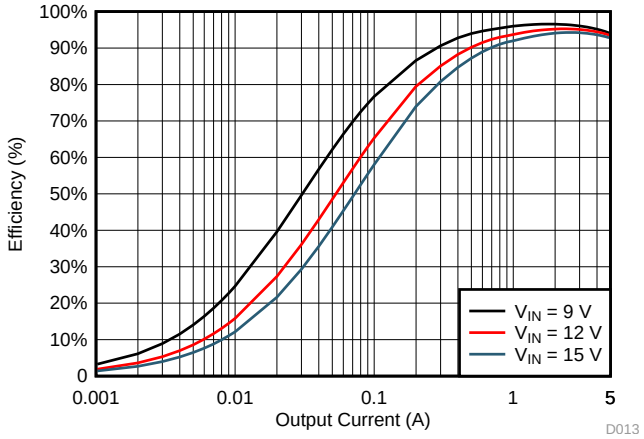

Figure 13. TPS565208 V_{OUT} = 5 V Efficiency, L = 3.3 µH

Copyright © 2017, Texas Instruments Incorporated

7 Detailed Description

7.1 Overview

The TPS564208 is a 5-A synchronous step-down converter. The proprietary D-CAP2™ mode control supports low ESR output capacitors such as specialty polymer capacitors and multi-layer ceramic capacitors without complex external compensation circuits. The fast transient response of D-CAP2™ mode control can reduce the output capacitance required to meet a specific level of performance.

7.2 Functional Block Diagram

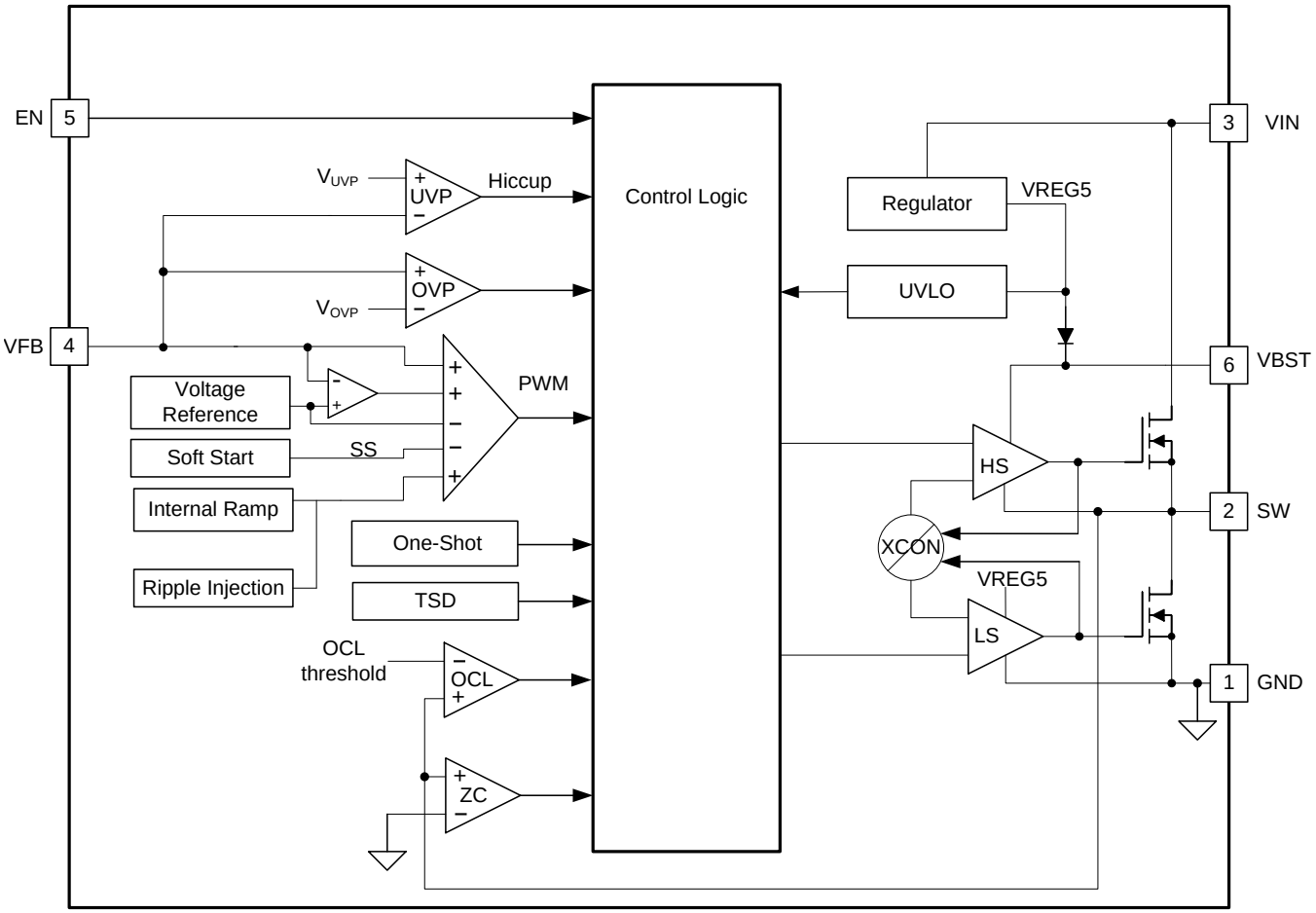

Copyright © 2017, Texas Instruments Incorporated

7.3 Feature Description

7.3.1 Adaptive On-Time Control and PWM Operation

The main control loop of the TPS565208 is adaptive on-time pulse width modulation (PWM) controller that supports a proprietary D-CAP2™ mode control. The D-CAP2™ mode control combines adaptive on-time control with an internal compensation circuit for pseudo-fixed frequency and low external component count configuration with low-ESR ceramic output capacitors. It is stable even with virtually no ripple at the output.

At the beginning of each cycle, the high-side MOSFET is turned on. This MOSFET is turned off after internal one-shot timer expires. This one shot duration is set inversely proportional to the converter input voltage, V_{IN}, and proportional to the output voltage V_O, to maintain a pseudo-fixed frequency over the input voltage range, hence it is called adaptive on-time control. The one-shot timer is reset and the high-side MOSFET is turned on again when the feedback voltage falls below the reference voltage. An ripple is added to reference voltage to simulate output ripple, eliminating the need for ESR induced output ripple from D-CAP2^{TM} mode control.

7.3.2 Soft Start and Pre-Biased Soft Start

The TPS565208 has an internal 1.0-ms soft-start. When the EN pin becomes high, the internal soft-start function begins ramping up the reference voltage to the PWM comparator.

If the output capacitor is pre-biased at startup, the device initiates switching and starts ramping up only after the internal reference voltage becomes greater than the feedback voltage V_{FB}. This scheme ensures that the converter ramps up smoothly into regulation point.

7.3.3 Current Protection

The output over-current limit (OCL) is implemented using a cycle-by-cycle valley detect control circuit. The inductor current is monitored during the OFF state by measuring the low-side FET drain to source voltage. This voltage is proportional to the switch current. To improve accuracy, the voltage sensing is temperature compensated.

During the on time of the high-side FET switch, the switch current increases at a linear rate determined by V_{IN}, V_{OUT}, and the output inductor value. During the on time of the low-side FET switch, this current decreases linearly. The average value of the switch current is the load current I_{OUT}. If the monitored current is above the OCL level, the converter maintains low-side FET on and delays the creation of a new set pulse, even the voltage feedback loop requires one, until the current level becomes OCL level or lower. In subsequent switching cycles, the on-time is set to a fixed value and the current is monitored in the same manner.

There are some important considerations for this type of over-current protection. The load current is higher than the over-current threshold by one half of the peak-to-peak inductor ripple current. Also, when the current is being limited, the output voltage tends to fall as the demanded load current may be higher than the current available from the converter. This may cause the output voltage to fall. When the VFB voltage falls below the UVP threshold voltage, the UVP comparator detects it. And then, the device shuts down after the UVP delay time (typically 24 µs) and re-starts after the hiccup time (typically 14.9 ms).

When the over current condition is removed, the output voltage returns to the regulated value.

7.3.4 Undervoltage Lockout (UVLO) Protection

UVLO protection monitors the internal regulator voltage. When the voltage is lower than UVLO threshold voltage, the device is shut off. This protection is non-latching.

7.3.5 Thermal Shutdown

The device monitors the temperature of itself. If the temperature exceeds the threshold value (typically 172°C), the device is shut off. This is a non-latch protection.

Copyright © 2017, Texas Instruments Incorporated

7.4 Device Functional Modes

7.4.1 Normal Operation

When the input voltage is above the UVLO threshold and the EN voltage is above the enable threshold, the TPS565208 operates in the normal switching mode. Normal continuous conduction mode (CCM) occurs when the minimum switch current is above 0 A. In CCM, the TPS565208 operates at a quasi-fixed frequency of 550 kHz.

7.4.2 Standby Operation

When the TPS565208 is operating in normal CCM, it may be placed in standby by asserting the EN pin low.

Copyright © 2017, Texas Instruments Incorporated

8 Application and Implementation

NOTE

Information in the following applications sections is not part of the TI component specification, and TI does not warrant its accuracy or completeness. TI's customers are responsible for determining suitability of components for their purposes. Customers should validate and test their design implementation to confirm system functionality.

8.1 Application Information

The device is a typical step-down DC-DC converter for converting a higher dc voltage to a lower dc voltage with a maximum available output current of 5 A. The following design procedure can be used to select component values for the TPS565208. Alternately, the WEBENCH® software may be used to generate a complete design. The WEBENCH software uses an iterative design procedure and accesses a comprehensive database of components when generating a design. This section presents a simplified discussion of the design process.

8.2 Typical Application

The application schematic in Figure 14 shows the TPS565208 4.5-V to 17-V input, 1.05-V output converter design meeting the requirements for 5-A output. This circuit is available as the evaluation module (EVM). The sections provide the design procedure.

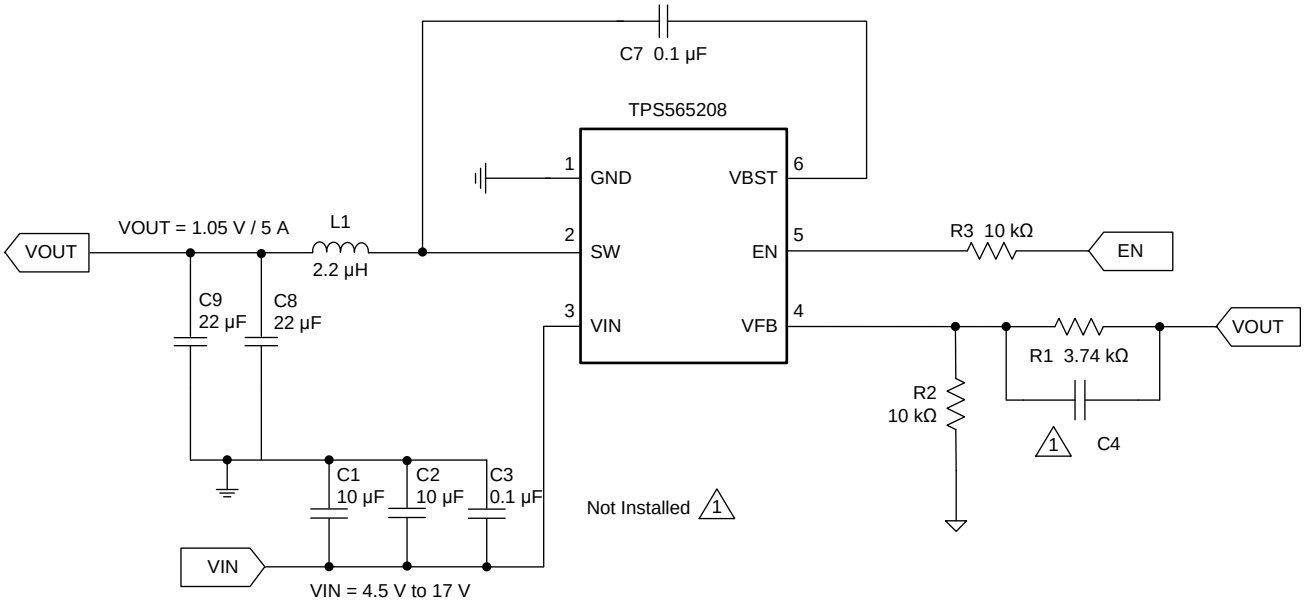

Copyright © 2017, Texas Instruments Incorporated

Figure 14. TPS565208 1.05-V, 5-A Reference Design

Typical Application (continued)

8.2.1 Design Requirements

Table 1 shows the design parameters for this application.

Table 1. Design Parameters

PARAMETER	EXAMPLE VALUE
Input voltage range	4.5 to 17 V
Output voltage	1.05 V
Transient response, 1A/us slew rate	ΔVout = ±5%
Input ripple voltage	400 mV
Output ripple voltage	20 mV
Output current rating	5 A
Operating frequency	550 kHz

8.2.2 Detailed Design Procedure

8.2.2.1 Custom Design With WEBENCH® Tools

Click here to create a custom design using the TPS565208 device with the WEBENCH® Power Designer.

1. Start by entering the input voltage (V_{IN}), output voltage (V_{OUT}), and output current (I_{OUT}) requirements.
2. Optimize the design for key parameters such as efficiency, footprint, and cost using the optimizer dial.
3. Compare the generated design with other possible solutions from Texas Instruments.

The WEBENCH Power Designer provides a customized schematic along with a list of materials with real-time pricing and component availability.

In most cases, these actions are available:

- Run electrical simulations to see important waveforms and circuit performance
- Run thermal simulations to understand board thermal performance
- Export customized schematic and layout into popular CAD formats
- Print PDF reports for the design, and share the design with colleagues

Get more information about WEBENCH tools at www.ti.com/WEBENCH.

8.2.2.2 Output Voltage Resistors Selection

The output voltage is set with a resistor divider from the output node to the VFB pin. TI recommends to use 1% tolerance or better divider resistors. Start by using to calculate V_{OUT}.

To improve efficiency at very light loads consider using larger value resistors. However, using too high of resistance causes the circuit to be more susceptible to noise; and, voltage errors from the VFB input current will be more noticeable.

$$V_{OUT} = 0.760 \times \left(1 + \frac{R1}{R2}\right) \quad (1)$$

8.2.2.3 Output Filter Selection

The LC filter used as the output filter has double pole at:

$$f_P = \frac{1}{2\pi\sqrt{L_{OUT} \times C_{OUT}}} \quad (2)$$

At low frequencies, the overall loop gain is set by the output set-point resistor divider network and the internal gain of the device. The low frequency phase is 180°. At the output filter pole frequency, the gain rolls off at a –40 dB per decade rate and the phase drops rapidly. D-CAP2 introduces a high frequency zero that reduces the gain roll off to –20 dB per decade and increases the phase to 90° one decade above the zero frequency. The inductor and capacitor for the output filter must be selected so that the double pole of Equation 2 is located below the high frequency zero but close enough that the phase boost provided be the high frequency zero provides adequate phase margin for a stable circuit. To meet this requirement use the values recommended in Table 2.

Table 2. Recommended Component Values

OUTPUT VOLTAGE (V)	R1 (kΩ)	R2 (kΩ)	L1 (µH)			C8 + C9 (µF)
			MIN	TYP	MAX	
1	3.09	10.0	1	2.2	4.7	20 to 68
1.05	3.74	10.0	1	2.2	4.7	20 to 68
1.2	5.76	10.0	1	2.2	4.7	20 to 68
1.5	9.53	10.0	1.5	2.2	4.7	20 to 68
1.8	13.7	10.0	1.5	2.2	4.7	20 to 68
2.5	22.6	10.0	2.2	2.2	4.7	20 to 68
3.3	33.2	10.0	2.2	2.2	4.7	20 to 68
5	54.9	10.0	3.3	3.3	4.7	20 to 68
6.5	75	10.0	3.3	3.3	4.7	20 to 68

The inductor peak-to-peak ripple current, peak current and RMS current are calculated using Equation 3, Equation 4, and Equation 5. The inductor saturation current rating must be greater than the calculated peak current and the RMS or heating current rating must be greater than the calculated RMS current.

Use 550 kHz for f_{SW}. Make sure the chosen inductor is rated for the peak current of Equation 4 and the RMS current of Equation 6.

$$I_{P\text{-}P} = \frac{V_{OUT}}{V_{IN(MAX)}} \times \frac{V_{IN(MAX)} - V_{OUT}}{L_O \times f_{SW}} \quad (3)$$

$$I_{PEAK} = I_O + \frac{I_{P-P}}{2} \quad (4)$$

$$I_{LO(RMS)} = \sqrt{I_O^2 + \frac{1}{12} I_{P-P}^2} \quad (5)$$

For this design example, the calculated peak current is 5.4 A and the calculated RMS current is 5 A. The inductor used is a WE 744311220 with a peak current rating of 13 A and an RMS current rating of 9 A.

The capacitor value and ESR determines the amount of output voltage ripple. The TPS565208 is intended for use with ceramic or other low ESR capacitors. Recommended values range from 20 µF to 68 µF. Use Equation 6 to determine the required RMS current rating for the output capacitor.

$$I_{CO(RMS)} = \frac{V_{OUT} \times (V_{IN} - V_{OUT})}{\sqrt{12} \times V_{IN} \times L_O \times f_{SW}} \quad (6)$$

For this design two TDK C3216X5R0J226M 22-µF output capacitors are used. The typical ESR is 2 mΩ each. The calculated RMS current is 0.229 A.

8.2.2.4 Input Capacitor Selection

The TPS565208 requires an input decoupling capacitor and a bulk capacitor is needed depending on the application. TI recommends a ceramic capacitor over 10 µF for the decoupling capacitor. An additional 0.1-µF capacitor (C3) from pin 3 to ground is optional to provide additional high frequency filtering. The capacitor voltage rating needs to be greater than the maximum input voltage.

Copyright © 2017, Texas Instruments Incorporated

8.2.2.5 Bootstrap Capacitor Selection

A 0.1-µF ceramic capacitor must be connected between the VBST to SW pin for proper operation. TI recommends to use a ceramic capacitor.

Copyright © 2017, Texas Instruments Incorporated

8.2.3 Application Curves

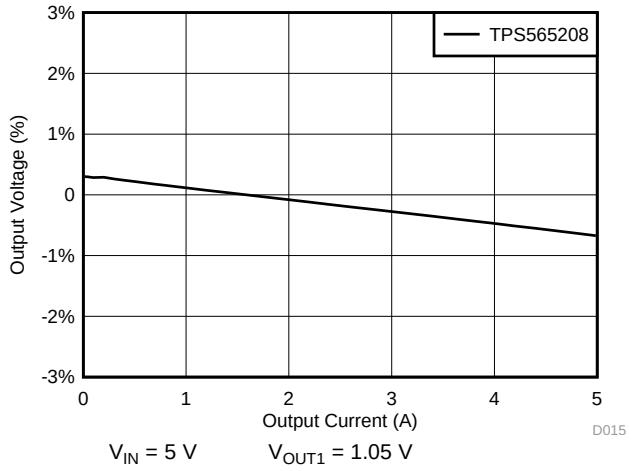

V_{IN} = 5 V V_{OUT1} = 1.05 V

Figure 15. TPS565208 Load Regulation, V_{IN} = 5 V

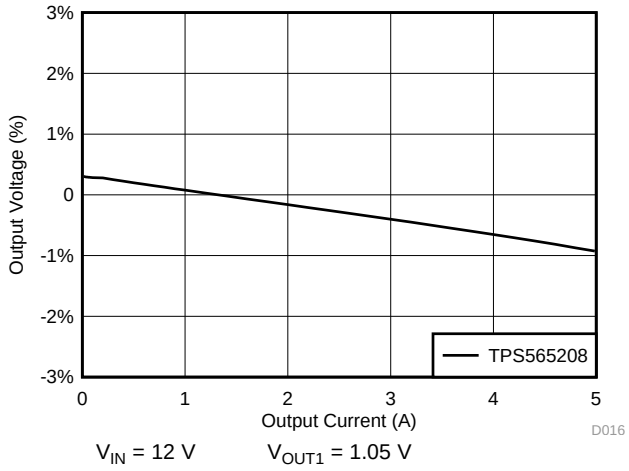

V_{IN} = 12 V V_{OUT1} = 1.05 V

Figure 16. TPS565208 Load Regulation, V_{IN} = 12 V

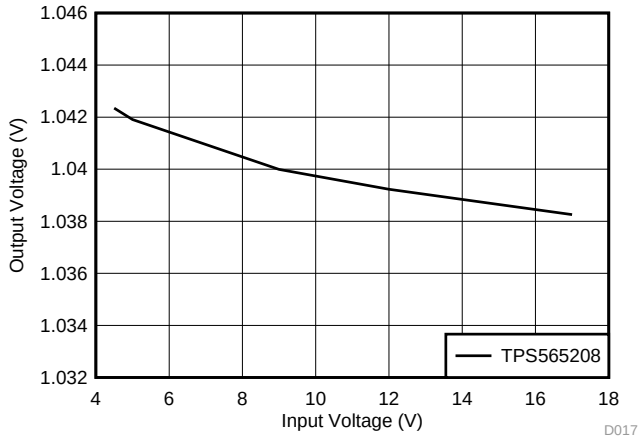

I_{OUT} = 1 A

Figure 17. TPS565208 Line Regulation

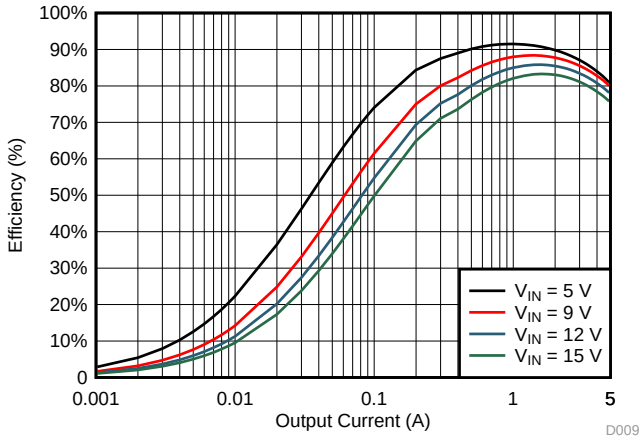

Figure 18. TPS565208 Efficiency, V_{out} = 1.05 V

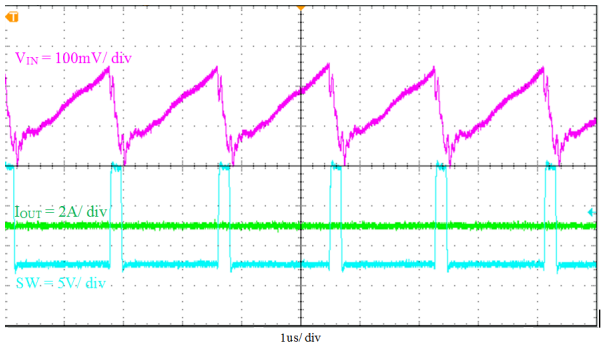

1 µs/div

Figure 19. TPS565208 Input Voltage Ripple

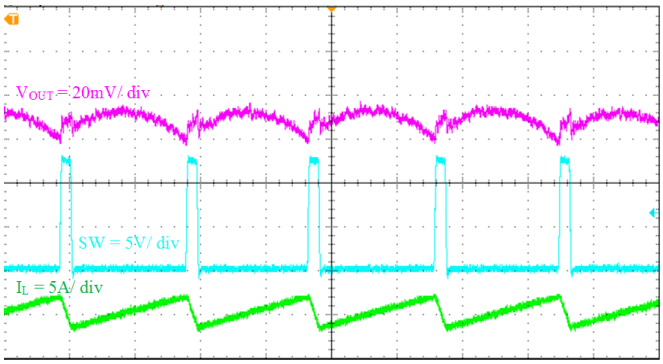

1 µs/div

Figure 20. TPS565208 Output Voltage Ripple, No Load

Copyright © 2017, Texas Instruments Incorporated

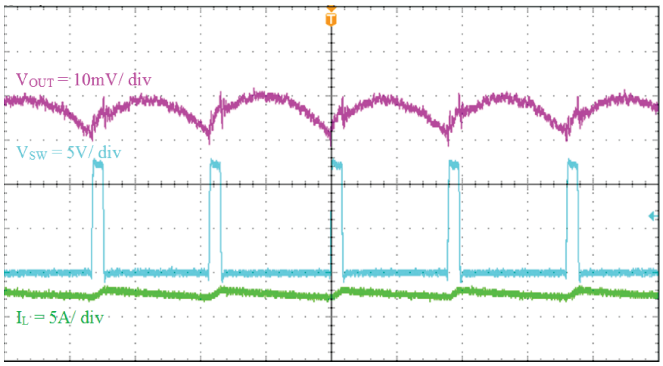

1 µs/div

Figure 21. TPS565208 Output Voltage Ripple, I_{OUT} 2.5 A

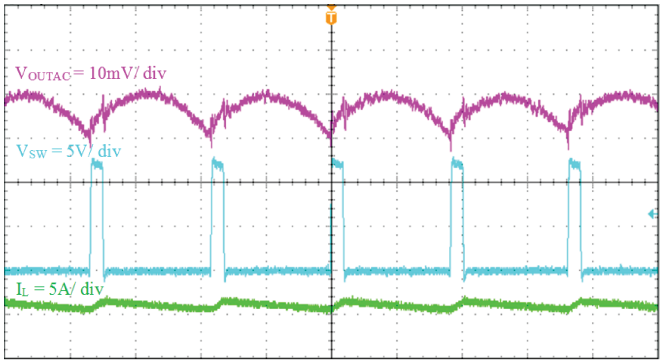

1 µs/div

Figure 22. TPS565208 Output Voltage Ripple, I_{OUT} 5 A

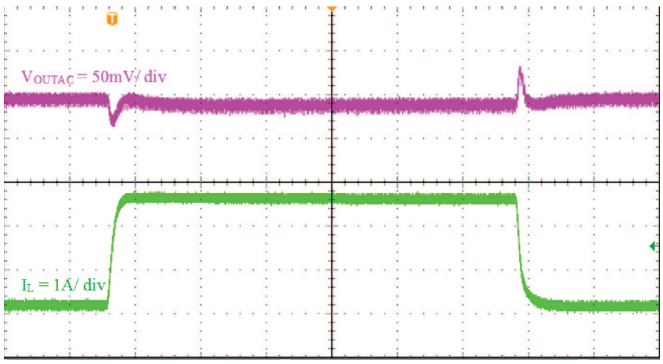

100 µs/div

Figure 23. TPS565208 Transient Response 0.1 to 2.5 A

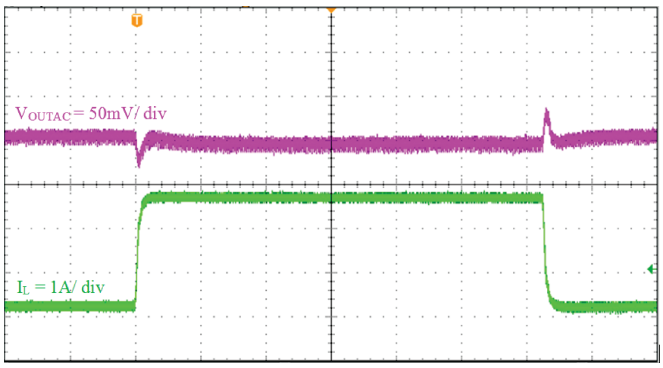

100 µs/div

Figure 24. TPS565208 Transient Response, 1.25 to 3.75 A

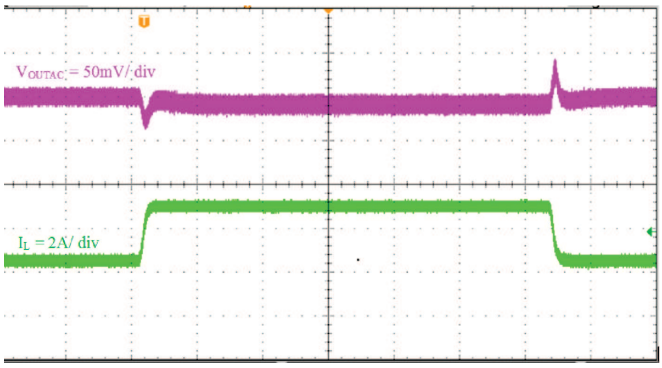

100 µs/div

Figure 25. TPS565208 Transient Response, 2.5 to 5 A

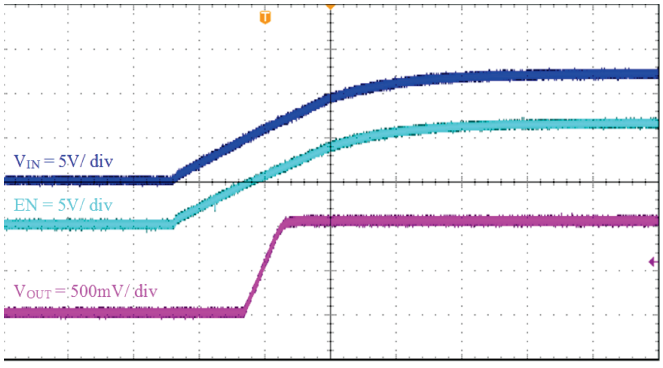

2 ms/div

Figure 26. TPS565208 Startup Relative to V_{IN}

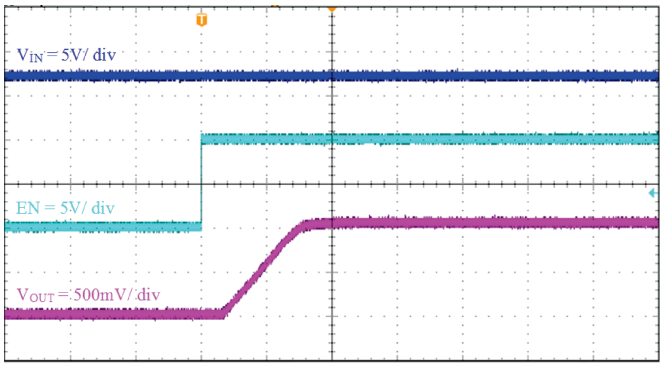

400 µs/div

Figure 27. TPS565208 Startup Relative to EN

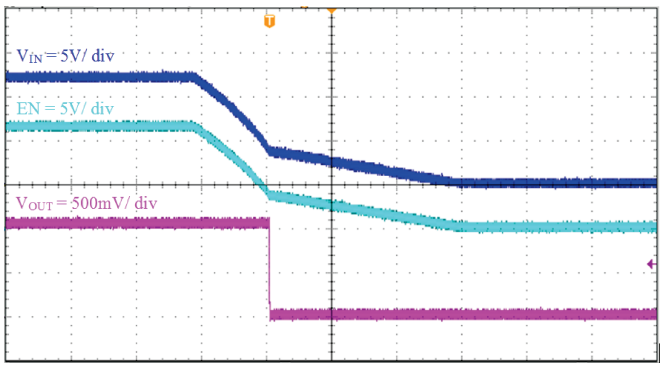

20 ms/div

Figure 28. TPS565208 Shutdown Relative to V_{IN}

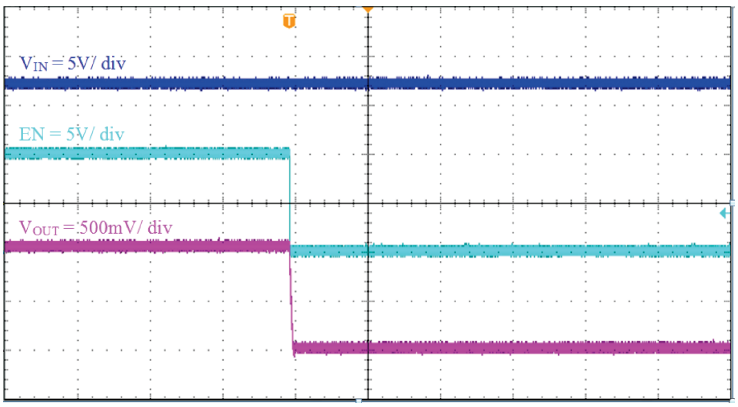

400 µs/div

Figure 29. TPS565208 Shutdown Relative to EN

9 Power Supply Recommendations

The TPS565208 is designed to operate from input supply voltage in the range of 4.5 V to 17 V. Buck converters require the input voltage to be higher than the output voltage for proper operation. The maximum recommended operating duty cycle is 83%. Using that criteria, the minimum recommended input voltage is V_O / 0.83.

Copyright © 2017, Texas Instruments Incorporated

10 Layout

10.1 Layout Guidelines

1. VIN and GND traces should be as wide as possible to reduce trace impedance. The wide areas are also of advantage from the view point of heat dissipation.
2. The input capacitor and output capacitor should be placed as close to the device as possible to minimize trace impedance.
3. Provide sufficient vias for the input capacitor and output capacitor.
4. Keep the SW trace as physically short and wide as practical to minimize radiated emissions.
5. Do not allow switching current to flow under the device.
6. A separate VOUT path should be connected to the upper feedback resistor.
7. Make a Kelvin connection to the GND pin for the feedback path.
8. Voltage feedback loop should be placed away from the high-voltage switching trace, and preferably has ground shield.
9. The trace of the VFB node should be as small as possible to avoid noise coupling.
10. The GND trace between the output capacitor and the GND pin should be as wide as possible to minimize its trace impedance.

10.2 Layout Example

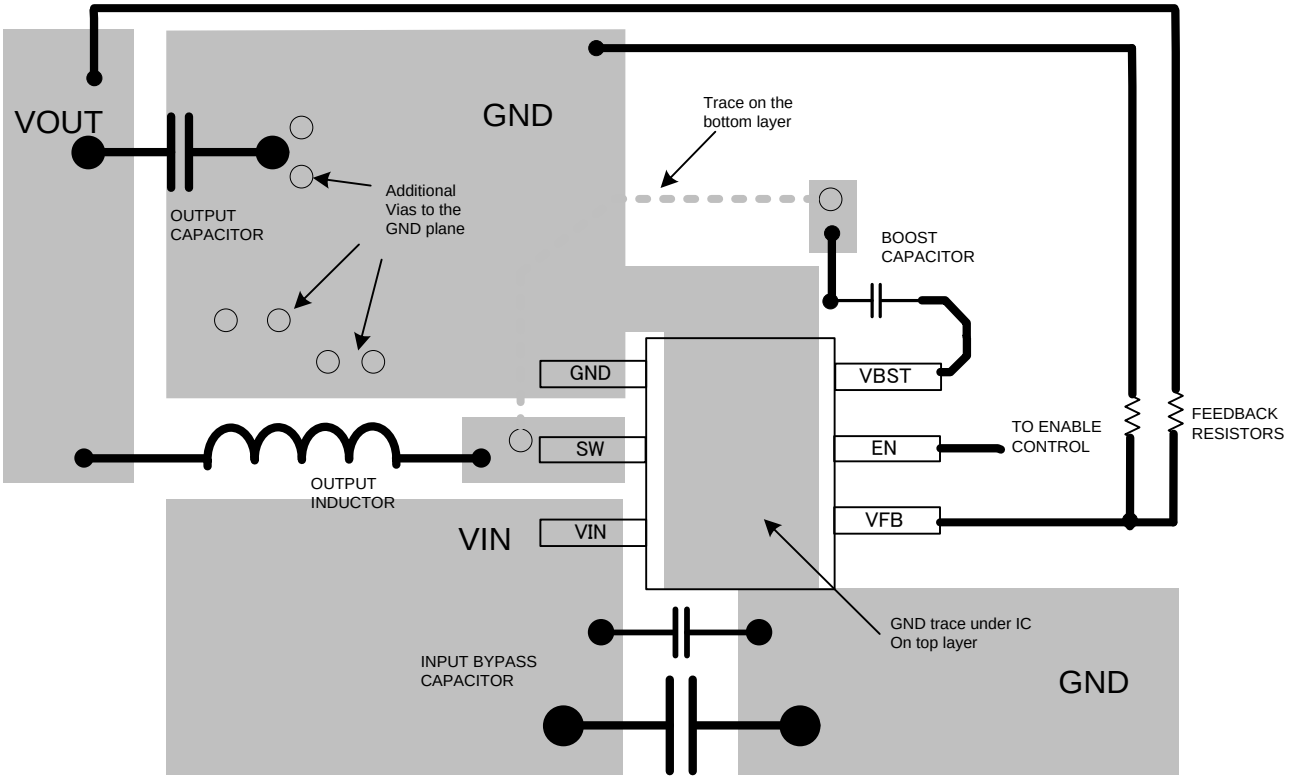

Figure 30. TPS565208 Layout Example

11 Device and Documentation Support

11.1 Development Support

11.1.1 Custom Design With WEBENCH® Tools

Click here to create a custom design using the TPS565208 device with the WEBENCH® Power Designer.

1. Start by entering the input voltage (V_{IN}), output voltage (V_{OUT}), and output current (I_{OUT}) requirements.
2. Optimize the design for key parameters such as efficiency, footprint, and cost using the optimizer dial.
3. Compare the generated design with other possible solutions from Texas Instruments.

The WEBENCH Power Designer provides a customized schematic along with a list of materials with real-time pricing and component availability.

In most cases, these actions are available:

- Run electrical simulations to see important waveforms and circuit performance
- Run thermal simulations to understand board thermal performance
- Export customized schematic and layout into popular CAD formats
- Print PDF reports for the design, and share the design with colleagues

Get more information about WEBENCH tools at www.ti.com/WEBENCH.

11.2 Receiving Notification of Documentation Updates

To receive notification of documentation updates, navigate to the device product folder on ti.com. In the upper right corner, click on *Alert me* to register and receive a weekly digest of any product information that has changed. For change details, review the revision history included in any revised document.

11.3 Community Resources

The following links connect to TI community resources. Linked contents are provided "AS IS" by the respective contributors. They do not constitute TI specifications and do not necessarily reflect TI's views; see TI's Terms of Use.

TI E2E™ Online Community ***TI's Engineer-to-Engineer (E2E) Community.*** Created to foster collaboration among engineers. At e2e.ti.com, you can ask questions, share knowledge, explore ideas and help solve problems with fellow engineers.

Design Support ***TI's Design Support*** Quickly find helpful E2E forums along with design support tools and contact information for technical support.

11.4 Trademarks

D-CAP2, E2E are trademarks of Texas Instruments.
WEBENCH is a registered trademark of Texas Instruments.
Blu-ray is a trademark of Blu-ray Disc Association.

11.5 Electrostatic Discharge Caution



These devices have limited built-in ESD protection. The leads should be shorted together or the device placed in conductive foam during storage or handling to prevent electrostatic damage to the MOS gates.

11.6 Glossary

SLYZ022 — *TI Glossary*.

This glossary lists and explains terms, acronyms, and definitions.

12 Mechanical, Packaging, and Orderable Information

The following pages include mechanical, packaging, and orderable information. This information is the most current data available for the designated devices. This data is subject to change without notice and revision of this document. For browser-based versions of this data sheet, refer to the left-hand navigation.

Copyright © 2017, Texas Instruments Incorporated

PACKAGING INFORMATION

Orderable Device	Status (1)	Package Type	Package Drawing	Pins	Package Qty	Eco Plan (2)	Lead/Ball Finish (6)	MSL Peak Temp (3)	Op Temp (°C)	Device Marking (4/5)	Samples
TPS565208DDCR	ACTIVE	SOT-23-THIN	DDC	6	3000	Green (RoHS & no Sb/Br)	CU SN	Level-1-260C-UNLIM	-40 to 125	5208	Samples
TPS565208DDCT	ACTIVE	SOT-23-THIN	DDC	6	250	Green (RoHS & no Sb/Br)	CU SN	Level-1-260C-UNLIM	-40 to 125	5208	Samples

(1) The marketing status values are defined as follows:
ACTIVE: Product device recommended for new designs.
LIFEBUY: TI has announced that the device will be discontinued, and a lifetime-buy period is in effect.
NRND: Not recommended for new designs. Device is in production to support existing customers, but TI does not recommend using this part in a new design.
PREVIEW: Device has been announced but is not in production. Samples may or may not be available.
OBSOLETE: TI has discontinued the production of the device.

(2) **RoHS:** TI defines "RoHS" to mean semiconductor products that are compliant with the current EU RoHS requirements for all 10 RoHS substances, including the requirement that RoHS substance do not exceed 0.1% by weight in homogeneous materials. Where designed to be soldered at high temperatures, "RoHS" products are suitable for use in specified lead-free processes. TI may reference these types of products as "Pb-Free".
RoHS Exempt: TI defines "RoHS Exempt" to mean products that contain lead but are compliant with EU RoHS pursuant to a specific EU RoHS exemption.
Green: TI defines "Green" to mean the content of Chlorine (Cl) and Bromine (Br) based flame retardants meet JS709B low halogen requirements of <=1000ppm threshold. Antimony trioxide based flame retardants must also meet the <=1000ppm threshold requirement.

(3) MSL, Peak Temp. - The Moisture Sensitivity Level rating according to the JEDEC industry standard classifications, and peak solder temperature.

(4) There may be additional marking, which relates to the logo, the lot trace code information, or the environmental category on the device.

(5) Multiple Device Markings will be inside parentheses. Only one Device Marking contained in parentheses and separated by a "~" will appear on a device. If a line is indented then it is a continuation of the previous line and the two combined represent the entire Device Marking for that device.

(6) Lead/Ball Finish - Orderable Devices may have multiple material finish options. Finish options are separated by a vertical ruled line. Lead/Ball Finish values may wrap to two lines if the finish value exceeds the maximum column width.

Important Information and Disclaimer: The information provided on this page represents TI's knowledge and belief as of the date that it is provided. TI bases its knowledge and belief on information provided by third parties, and makes no representation or warranty as to the accuracy of such information. Efforts are underway to better integrate information from third parties. TI has taken and continues to take reasonable steps to provide representative and accurate information but may not have conducted destructive testing or chemical analysis on incoming materials and chemicals. TI and TI suppliers consider certain information to be proprietary, and thus CAS numbers and other limited information may not be available for release.

In no event shall TI's liability arising out of such information exceed the total purchase price of the TI part(s) at issue in this document sold by TI to Customer on an annual basis.

TAPE AND REEL INFORMATION

REEL DIMENSIONS

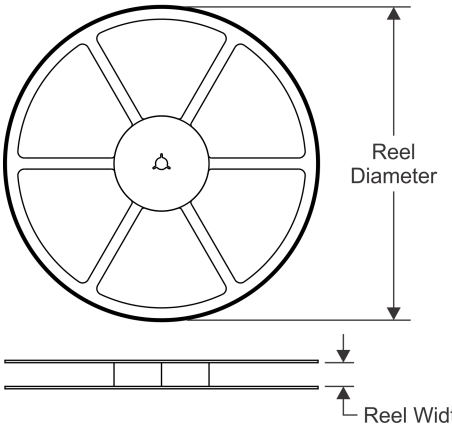

TAPE DIMENSIONS

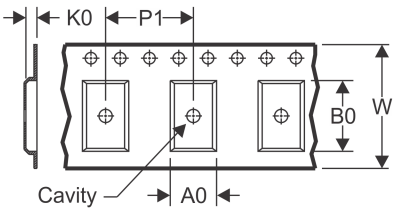

A0	Dimension designed to accommodate the component width
B0	Dimension designed to accommodate the component length
K0	Dimension designed to accommodate the component thickness
W	Overall width of the carrier tape
P1	Pitch between successive cavity centers

QUADRANT ASSIGNMENTS FOR PIN 1 ORIENTATION IN TAPE

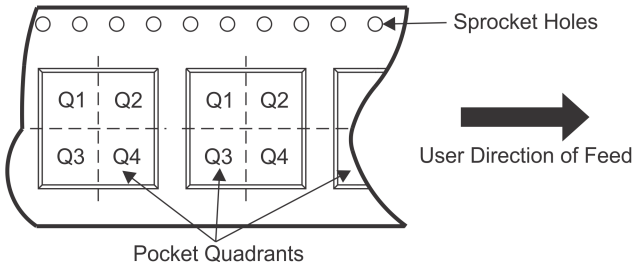

*All dimensions are nominal

Device	Package Type	Package Drawing	Pins	SPQ	Reel Diameter (mm)	Reel Width W1 (mm)	A0 (mm)	B0 (mm)	K0 (mm)	P1 (mm)	W (mm)	Pin1 Quadrant
TPS565208DDCR	SOT-23-THIN	DDC	6	3000	180.0	9.5	3.17	3.1	1.1	4.0	8.0	Q3
TPS565208DDCT	SOT-23-THIN	DDC	6	250	180.0	9.5	3.17	3.1	1.1	4.0	8.0	Q3

TAPE AND REEL BOX DIMENSIONS

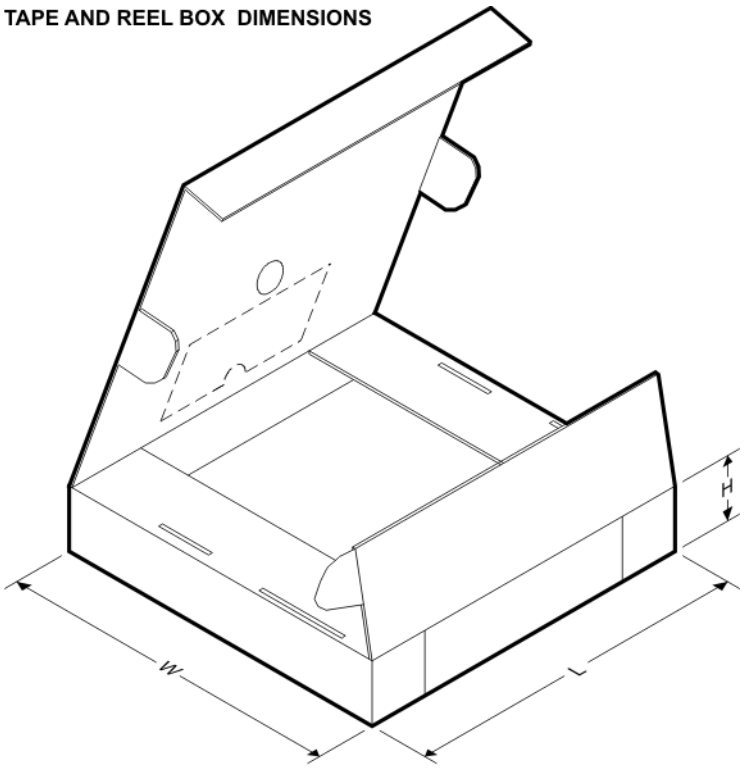

*All dimensions are nominal

Device	Package Type	Package Drawing	Pins	SPQ	Length (mm)	Width (mm)	Height (mm)
TPS565208DDCR	SOT-23-THIN	DDC	6	3000	184.0	184.0	19.0
TPS565208DDCT	SOT-23-THIN	DDC	6	250	184.0	184.0	19.0

DDC (R–PDSO–G6) PLASTIC SMALL–OUTLINE

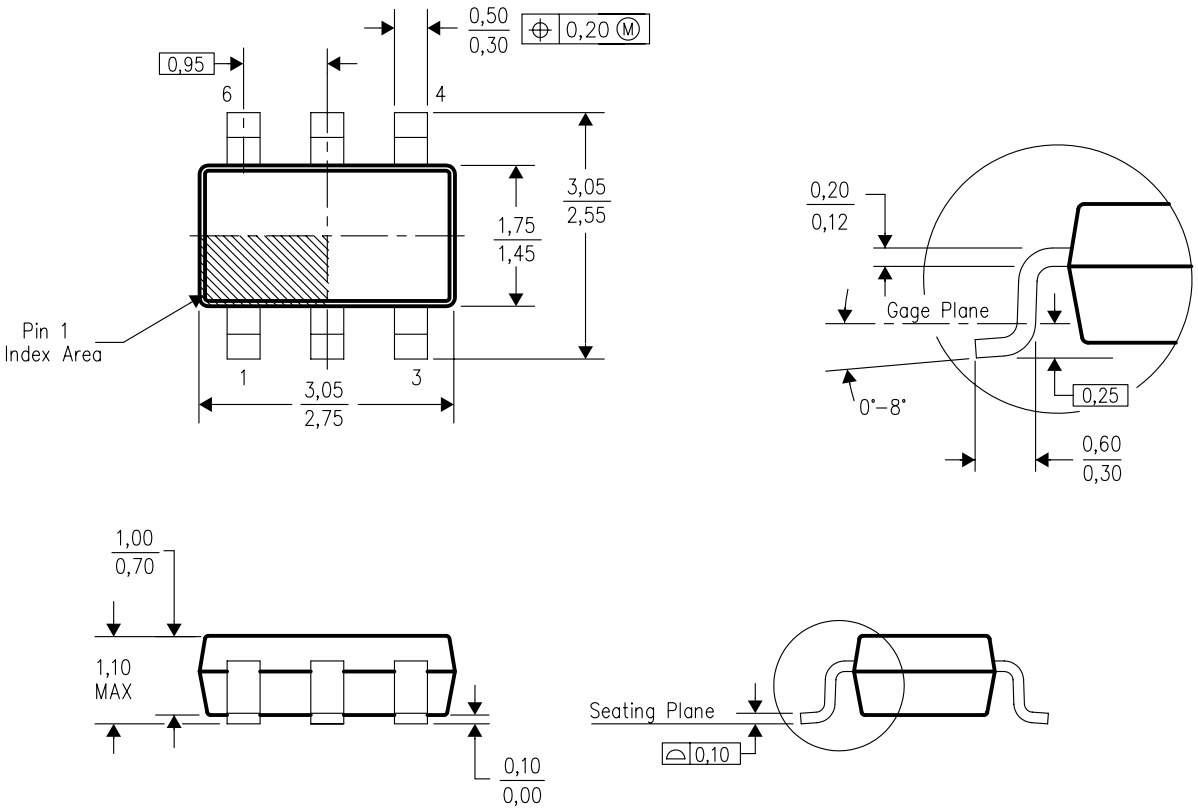

4204403–3/E 06/05

NOTES:
A. All linear dimensions are in millimeters.
B. This drawing is subject to change without notice.
C. Body dimensions do not include mold flash or protrusion.
D. Falls within JEDEC MO–193 variation AA (6 pin).

IMPORTANT NOTICE

Texas Instruments Incorporated (TI) reserves the right to make corrections, enhancements, improvements and other changes to its semiconductor products and services per JESD46, latest issue, and to discontinue any product or service per JESD48, latest issue. Buyers should obtain the latest relevant information before placing orders and should verify that such information is current and complete.

TI's published terms of sale for semiconductor products (http://www.ti.com/sc/docs/stdterms.htm) apply to the sale of packaged integrated circuit products that TI has qualified and released to market. Additional terms may apply to the use or sale of other types of TI products and services.

Reproduction of significant portions of TI information in TI data sheets is permissible only if reproduction is without alteration and is accompanied by all associated warranties, conditions, limitations, and notices. TI is not responsible or liable for such reproduced documentation. Information of third parties may be subject to additional restrictions. Resale of TI products or services with statements different from or beyond the parameters stated by TI for that product or service voids all express and any implied warranties for the associated TI product or service and is an unfair and deceptive business practice. TI is not responsible or liable for any such statements.

Buyers and others who are developing systems that incorporate TI products (collectively, "Designers") understand and agree that Designers remain responsible for using their independent analysis, evaluation and judgment in designing their applications and that Designers have full and exclusive responsibility to assure the safety of Designers' applications and compliance of their applications (and of all TI products used in or for Designers' applications) with all applicable regulations, laws and other applicable requirements. Designer represents that, with respect to their applications, Designer has all the necessary expertise to create and implement safeguards that (1) anticipate dangerous consequences of failures, (2) monitor failures and their consequences, and (3) lessen the likelihood of failures that might cause harm and take appropriate actions. Designer agrees that prior to using or distributing any applications that include TI products, Designer will thoroughly test such applications and the functionality of such TI products as used in such applications.

TI's provision of technical, application or other design advice, quality characterization, reliability data or other services or information, including, but not limited to, reference designs and materials relating to evaluation modules, (collectively, "TI Resources") are intended to assist designers who are developing applications that incorporate TI products; by downloading, accessing or using TI Resources in any way, Designer (individually or, if Designer is acting on behalf of a company, Designer's company) agrees to use any particular TI Resource solely for this purpose and subject to the terms of this Notice.

TI's provision of TI Resources does not expand or otherwise alter TI's applicable published warranties or warranty disclaimers for TI products, and no additional obligations or liabilities arise from TI providing such TI Resources. TI reserves the right to make corrections, enhancements, improvements and other changes to its TI Resources. TI has not conducted any testing other than that specifically described in the published documentation for a particular TI Resource.

Designer is authorized to use, copy and modify any individual TI Resource only in connection with the development of applications that include the TI product(s) identified in such TI Resource. NO OTHER LICENSE, EXPRESS OR IMPLIED, BY ESTOPPEL OR OTHERWISE TO ANY OTHER TI INTELLECTUAL PROPERTY RIGHT, AND NO LICENSE TO ANY TECHNOLOGY OR INTELLECTUAL PROPERTY RIGHT OF TI OR ANY THIRD PARTY IS GRANTED HEREIN, including but not limited to any patent right, copyright, mask work right, or other intellectual property right relating to any combination, machine, or process in which TI products or services are used. Information regarding or referencing third-party products or services does not constitute a license to use such products or services, or a warranty or endorsement thereof. Use of TI Resources may require a license from a third party under the patents or other intellectual property of the third party, or a license from TI under the patents or other intellectual property of TI.

TI RESOURCES ARE PROVIDED "AS IS" AND WITH ALL FAULTS. TI DISCLAIMS ALL OTHER WARRANTIES OR REPRESENTATIONS, EXPRESS OR IMPLIED, REGARDING RESOURCES OR USE THEREOF, INCLUDING BUT NOT LIMITED TO ACCURACY OR COMPLETENESS, TITLE, ANY EPIDEMIC FAILURE WARRANTY AND ANY IMPLIED WARRANTIES OF MERCHANTABILITY, FITNESS FOR A PARTICULAR PURPOSE, AND NON-INFRINGEMENT OF ANY THIRD PARTY INTELLECTUAL PROPERTY RIGHTS. TI SHALL NOT BE LIABLE FOR AND SHALL NOT DEFEND OR INDEMNIFY DESIGNER AGAINST ANY CLAIM, INCLUDING BUT NOT LIMITED TO ANY INFRINGEMENT CLAIM THAT RELATES TO OR IS BASED ON ANY COMBINATION OF PRODUCTS EVEN IF DESCRIBED IN TI RESOURCES OR OTHERWISE. IN NO EVENT SHALL TI BE LIABLE FOR ANY ACTUAL, DIRECT, SPECIAL, COLLATERAL, INDIRECT, PUNITIVE, INCIDENTAL, CONSEQUENTIAL OR EXEMPLARY DAMAGES IN CONNECTION WITH OR ARISING OUT OF TI RESOURCES OR USE THEREOF, AND REGARDLESS OF WHETHER TI HAS BEEN ADVISED OF THE POSSIBILITY OF SUCH DAMAGES.

Unless TI has explicitly designated an individual product as meeting the requirements of a particular industry standard (e.g., ISO/TS 16949 and ISO 26262), TI is not responsible for any failure to meet such industry standard requirements.

Where TI specifically promotes products as facilitating functional safety or as compliant with industry functional safety standards, such products are intended to help enable customers to design and create their own applications that meet applicable functional safety standards and requirements. Using products in an application does not by itself establish any safety features in the application. Designers must ensure compliance with safety-related requirements and standards applicable to their applications. Designer may not use any TI products in life-critical medical equipment unless authorized officers of the parties have executed a special contract specifically governing such use. Life-critical medical equipment is medical equipment where failure of such equipment would cause serious bodily injury or death (e.g., life support, pacemakers, defibrillators, heart pumps, neurostimulators, and implantables). Such equipment includes, without limitation, all medical devices identified by the U.S. Food and Drug Administration as Class III devices and equivalent classifications outside the U.S.

TI may expressly designate certain products as completing a particular qualification (e.g., Q100, Military Grade, or Enhanced Product). Designers agree that it has the necessary expertise to select the product with the appropriate qualification designation for their applications and that proper product selection is at Designers' own risk. Designers are solely responsible for compliance with all legal and regulatory requirements in connection with such selection.

Designer will fully indemnify TI and its representatives against any damages, costs, losses, and/or liabilities arising out of Designer's non-compliance with the terms and provisions of this Notice.

Mailing Address: Texas Instruments, Post Office Box 655303, Dallas, Texas 75265
Copyright © 2017, Texas Instruments Incorporated