TPS563207 4.3-V to 17-V Input, 3-A Synchronous Buck Converter in SOT563

1 Features

- 3-A converter with integrated 95-mΩ and 57-mΩ FETs
- D-CAP2™ mode control with fast transient response
- Input voltage range: 4.3 V to 17 V
- Output voltage range: 0.806 V to 7 V
- Continuous current mode (FCCM mode)
- Typical 580-kHz switching frequency
- Low shutdown current of less than 3 µA
- 2% feedback voltage accuracy (25°C)
- Provide pre-bias function
- Cycle-by-cycle overcurrent limit
- Hiccup-mode overcurrent protection
- Non-latch UVP and TSD protections
- Fixed soft start: 1.2 ms

2 Applications

- Digital set-top box (STB)
- SMPS power supply for TV
- Smart speaker
- Wired networking
- Surveillance

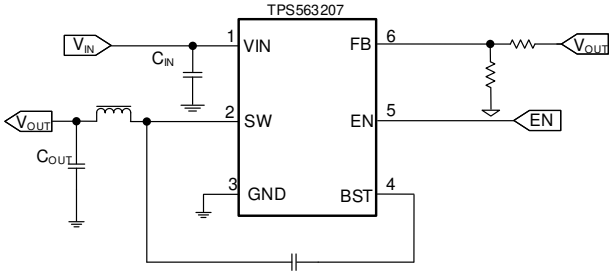

Copyright © 2019, Texas Instruments Incorporated

Simplified Schematic

3 Description

The TPS563207 is a simple, easy-to-use, 3-A synchronous buck converter in a SOT563 package.

The device is optimized to operate with minimum external components.

This switch mode power supply (SMPS) device employs D-CAP2™ mode control, providing a fast transient response and supporting both low-equivalent series resistance (ESR) output capacitors such as specialty polymer and ultra-low ESR ceramic capacitors with no external compensation components.

The TPS563207 operates in FCCM mode, which maintains small ripple even at light loads. The TPS563207 is available in a 6-pin 1.6-mm × 1.6-mm SOT563 (DRL) package, and specified from a –40°C to 125°C junction temperature.

Device Information

PART NUMBER	PACKAGE (1)	BODY SIZE (NOM)
TPS563207	SOT563	1.60 mm × 1.60 mm

(1) For all available packages, see the orderable addendum at the end of the data sheet.

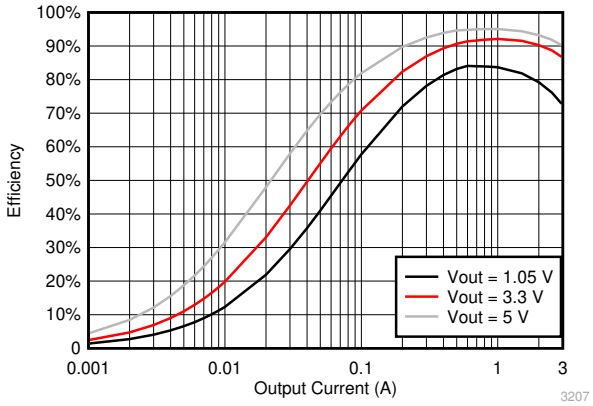

TPS563207 Efficiency

An IMPORTANT NOTICE at the end of this data sheet addresses availability, warranty, changes, use in safety-critical applications, intellectual property matters and other important disclaimers. PRODUCTION DATA.

Table of Contents

1 Features....1
2 Applications....1
3 Description....1
4 Revision History....2
5 Device Comparison Table....2
6 Pin Configuration and Functions....3
Pin Functions....3
7 Specifications....4
7.1 Absolute Maximum Ratings....4
7.2 ESD Ratings....4
7.3 Recommended Operating Conditions....4
7.4 Thermal Information....4
7.5 Electrical Characteristics....6
7.6 Typical Characteristics....7
8 Detailed Description....10
8.1 Overview....10
8.2 Functional Block Diagram....10
8.3 Feature Description....10
8.4 Device Functional Modes....11
9 Application and Implementation....12
9.1 Application Information....12
9.2 Typical Application....12
10 Power Supply Recommendations....16
11 Layout....17
11.1 Layout Guidelines....17
11.2 Layout Example....17
12 Device and Documentation Support....18
12.1 Receiving Notification of Documentation Updates....18
12.2 Support Resources....18
12.3 Trademarks....18
12.4 Electrostatic Discharge Caution....18
12.5 Glossary....18
13 Mechanical, Packaging, and Orderable Information....18

4 Revision History

DATE	REVISION	NOTES
September 2020	*	Initial release

5 Device Comparison Table

PART NUMBER	WORK MODE IN LIGHT LOADING
TPS563207	FCCM
TPS563202	ECO

Copyright © 2020 Texas Instruments Incorporated

6 Pin Configuration and Functions

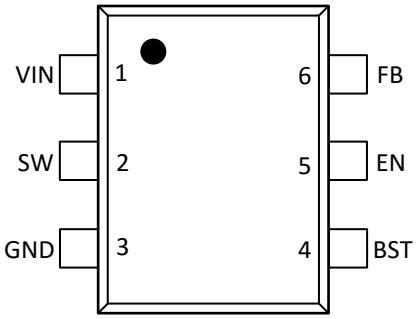

Figure 6-1. 6-Pin SOT563 DRL Package (Top View)

Pin Functions

PIN		I/O	DESCRIPTION
NAME	NO.		
VIN	1	I	Input voltage supply pin
SW	2	O	Switch node connection between high-side NFET and low-side NFET
GND	3	—	Ground pin Source terminal of low-side power NFET as well as the ground terminal for controller circuit. Connect sensitive FB to this GND at a single point.
BST	4	O	Supply input for the high-side NFET gate drive circuit. Connect 0.1-µF capacitor between BST and SW pin.
EN	5	I	Enable input control. Active high and must be pulled up to enable the device.
FB	6	I	Converter feedback input. Connect to output voltage with feedback resistor divider.

Copyright © 2020 Texas Instruments Incorporated

7 Specifications

7.1 Absolute Maximum Ratings

over operating free-air temperature range (unless otherwise noted)(1)

		MIN	MAX	UNIT
Input voltage	VIN, EN	–0.3	19	V
	BST	–0.3	25	V
	BST (10 ns transient)	–0.3	27	V
	BST (vs SW)	–0.3	6.5	V
	FB	–0.3	6.5	V
	SW	–2	19	V
	SW (10 ns transient)	–3.5	21	V
Operating junction temperature, T_J		–40	150	°C
Storage temperature, T_{stg}		–55	150	°C

(1) Stresses beyond those listed under *Absolute Maximum Ratings* may cause permanent damage to the device. These are stress ratings only, which do not imply functional operation of the device at these or any other conditions beyond those indicated under *Recommended Operating Conditions*. Exposure to absolute-maximum-rated conditions for extended periods may affect device reliability.

7.2 ESD Ratings

			VALUE	UNIT
$V_{(ESD)}$	Electrostatic discharge	Human-body model (HBM), per ANSI/ESDA/JEDEC JS-001(1)	±2000	V
		Charged-device model (CDM), per JEDEC specification JESD22-C101(2)	±500	

(1) JEDEC document JEP155 states that 500-V HBM allows safe manufacturing with a standard ESD control process.
(2) JEDEC document JEP157 states that 250-V CDM allows safe manufacturing with a standard ESD control process.

7.3 Recommended Operating Conditions

over operating free-air temperature range (unless otherwise noted)

			MIN	NOM	MAX	UNIT
V_{IN}	Supply input voltage range		4.3		17	V
V_I	Input voltage range	BST	–0.1		23	V
		BST (10 ns transient)	–0.1		26	
		BST (vs SW)	–0.1		6	
		EN	–0.1		17	
		FB	–0.1		5.5	
		SW	–1.8		17	
		SW (10 ns transient)	–3.5		20	
T_J	Operating junction temperature		–40		125	°C

7.4 Thermal Information

THERMAL METRIC(1)		TPS563207 DRL 6 PINS	UNIT
$R_{\theta JA}$	Junction-to-ambient thermal resistance	137.0	°C/W
$R_{\theta JA_effective}$	Junction-to-ambient thermal resistance with TI EVM board(2)	65.0	°C/W
$R_{\theta JC(top)}$	Junction-to-case (top) thermal resistance	43.2	°C/W
$R_{\theta JB}$	Junction-to-board thermal resistance	22.0	°C/W

Copyright © 2020 Texas Instruments Incorporated

THERMAL METRIC(1)		TPS563207 DRL 6 PINS	UNIT
ψ_{JT}	Junction-to-top characterization parameter	0.9	°C/W
ψ_{JB}	Junction-to-board characterization parameter	21.8	°C/W

(1) For more information about traditional and new thermal metrics, see the *Semiconductor and IC Package Thermal Metrics* application report.

(2) This $R_{\theta JA_effective}$ is tested on TPS563207EVM board (2 layer, copper thickness is 2 oz) at V_{IN} = 12 V, V_{OUT} = 5 V, I_{OUT} = 3 A , T_A = 25°C.

Copyright © 2020 Texas Instruments Incorporated

7.5 Electrical Characteristics

T_J = –40°C to 125°C, V_{IN} = 12 V (unless otherwise noted)

PARAMETER		TEST CONDITIONS	MIN	TYP	MAX	UNIT
SUPPLY CURRENT						
I_{VIN}	Operating – non-switching supply current	V_{IN} current, EN = 5 V, V_{FB} = 1 V		590	750	µA
I_{VINSDN}	Shutdown supply current	V_{IN} current, EN = 0 V		1	3	µA
LOGIC THRESHOLD						
V_{ENH}	EN high-level input voltage	EN		1.35	1.6	V
V_{ENL}	EN low-level input voltage	EN	0.9	1.05		V
R_{EN}	EN pin resistance to GND	V_{EN} = 12 V	225	400	900	kΩ
V_{FB} VOLTAGE						
V_{FBTH}	V_{FB} threshold voltage	T_A = 25°C	790	806	822	mV
I_{FB}	V_{FB} input current	V_{FB} = 1 V		0	±0.1	µA
MOSFET						
$R_{DS(on)h}$	High-side switch resistance	T_A = 25°C, V_{BST} – SW = 5.5 V		95		mΩ
$R_{DS(on)l}$	Low-side switch resistance	T_A = 25°C		57		mΩ
CURRENT LIMIT						
I_{ocl}	Low side current limit	Inductor valley current set point.	3.3	4.4	5.6	A
$I_{Nocl_l_sink}$	Low side FET sink current limit	Inductor Negtive valley current set point.	1	1.5	2	A
THERMAL SHUTDOWN						
T_{SDN}	Thermal shutdown threshold(1)	Shutdown temperature		172		°C
		Hysteresis		37		
ON-TIME TIMER CONTROL						
$t_{OFF(MIN)}$	Minimum off time	V_{FB} = 0.5 V		220	310	ns
SOFT START						
Tss	Soft-start time	Internal soft-start time ， test Vout from 10% to 90%		1.2		ms
FREQUENCY						
F_{sw}	Switching frequency	V_O = 1.05 V		580		kHz
OUTPUT UNDERVOLTAGE						
V_{UVP}	Output UVP threshold	Hiccup detect (H > L)		65%		
T_{HICCUP_WAIT}	Hiccup on time			2.2		ms
T_{HICCUP_RE}	Hiccup time before restart			18.3		ms
UVLO						
UVLO	UVLO threshold	Wake up VIN voltage		4.0	4.3	V
		Shutdown VIN voltage	3.3	3.6		
		Hysteresis VIN voltage		0.4		

(1) Not production tested.

Copyright © 2020 Texas Instruments Incorporated

7.6 Typical Characteristics

V_{IN} = 12 V (unless otherwise noted)

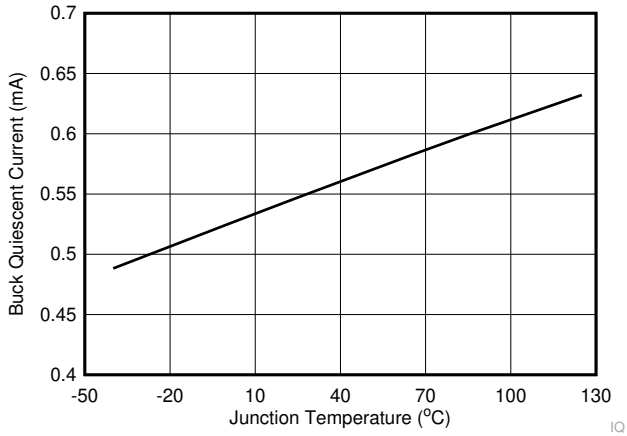

Figure 7-1. Supply Current vs Junction Temperature

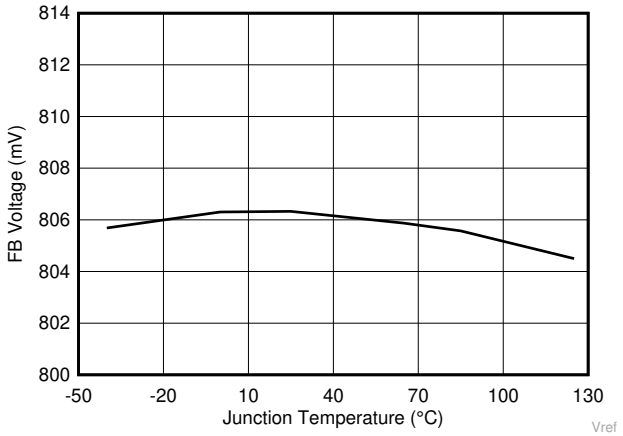

Figure 7-2. FB Voltage vs Junction Temperature

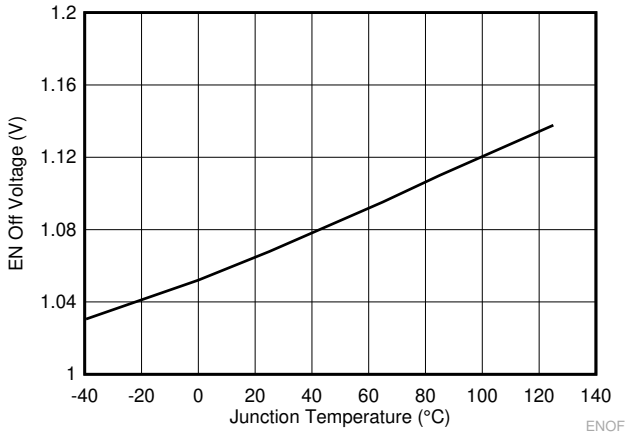

Figure 7-3. EN Pin EN Off Voltage vs Junction Temperature

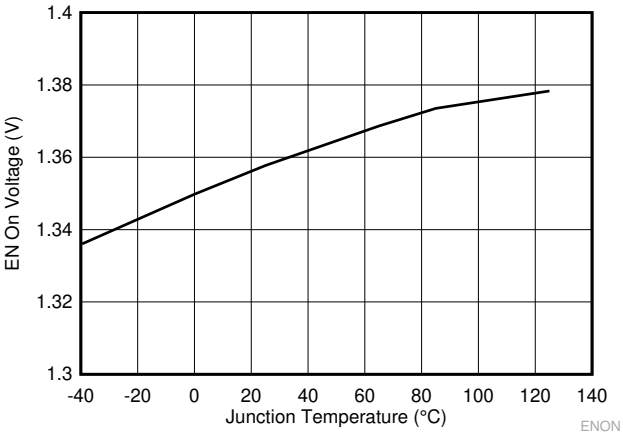

Figure 7-4. EN Pin EN On Voltage vs Junction Temperature

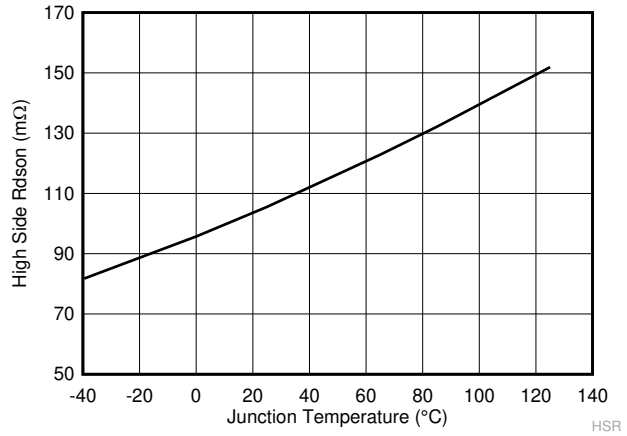

Figure 7-5. High-Side R_{ds-On} vs Junction Temperature

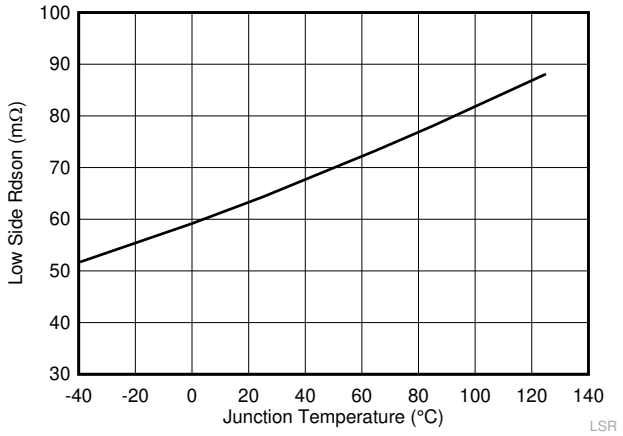

Figure 7-6. Low-Side R_{ds-On} vs Junction Temperature

Copyright © 2020 Texas Instruments Incorporated

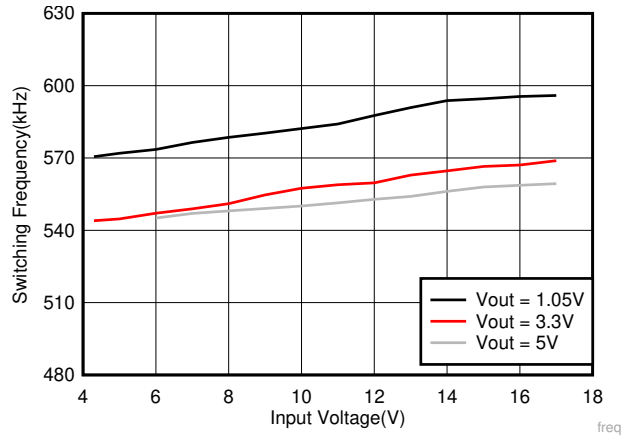

Figure 7-7. Switching Frequency vs Input Voltage

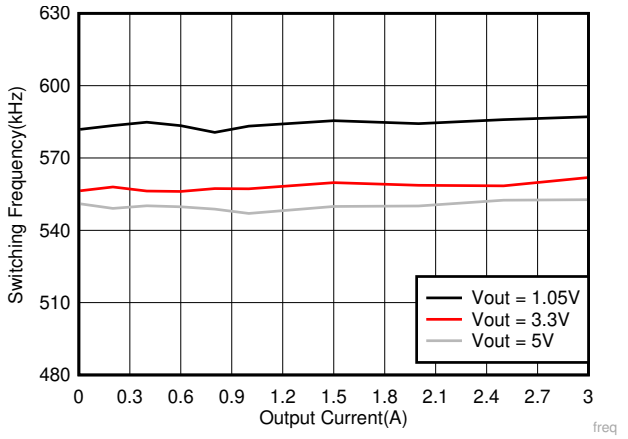

Figure 7-8. Switching Frequency vs Output Current

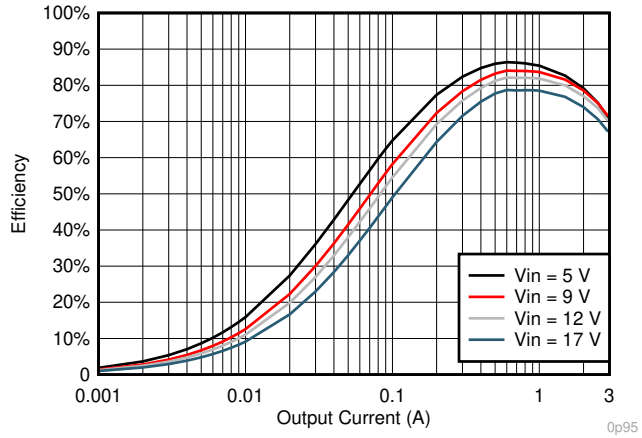

Figure 7-9. V_{OUT} = 0.95-V Efficiency, L = 1.5 µH

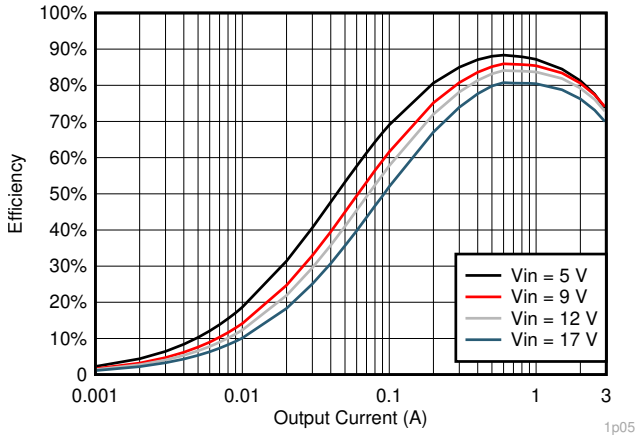

Figure 7-10. V_{OUT} = 1.05-V Efficiency, L = 1.5 µH

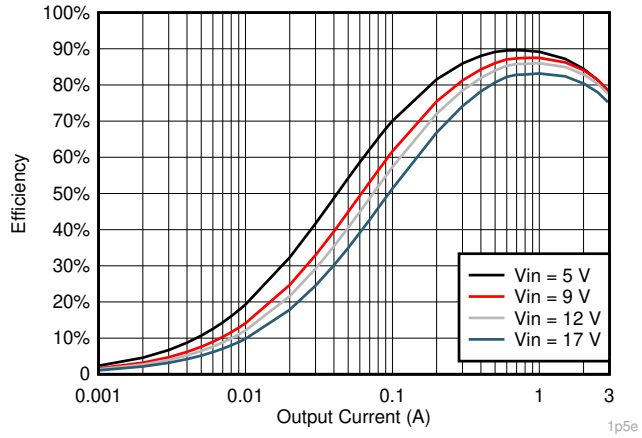

Figure 7-11. V_{OUT} = 1.5-V Efficiency, L = 2.2 µH

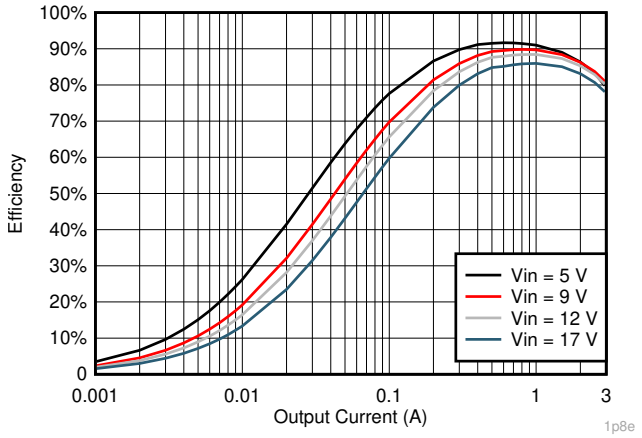

Figure 7-12. V_{OUT} = 1.8-V Efficiency, L = 2.2 µH

Copyright © 2020 Texas Instruments Incorporated

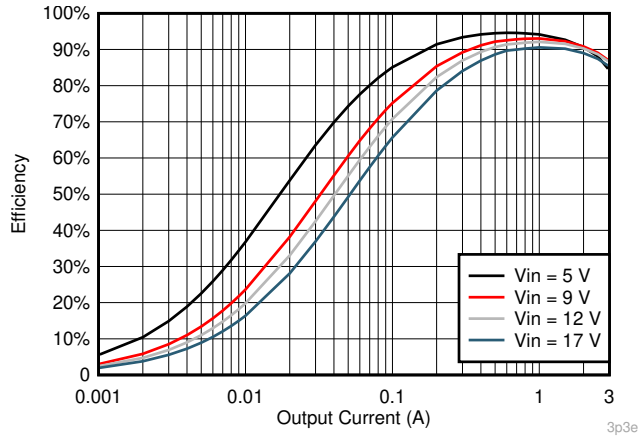

Figure 7-13. V_{OUT} = 3.3-V Efficiency, L = 3.3 µH

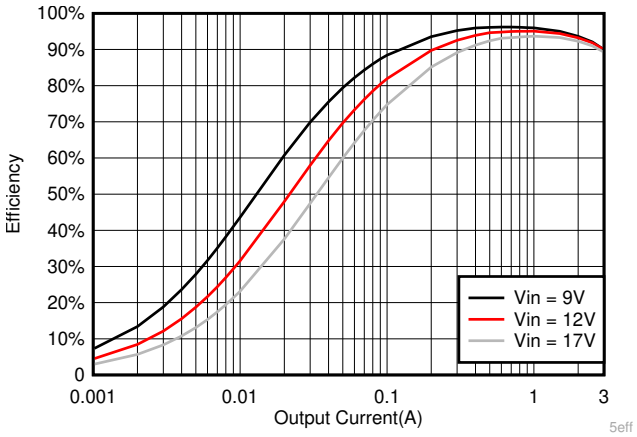

Figure 7-14. V_{OUT} = 5-V Efficiency, L = 4.7 µH

Copyright © 2020 Texas Instruments Incorporated

8 Detailed Description

8.1 Overview

The TPS563207 is a 3-A synchronous buck converter. The proprietary D-CAP2 mode control supports low-ESR output capacitors, such as specialty polymer capacitors and multi-layer ceramic capacitors, without complex external compensation circuits. The fast transient response of D-CAP2 mode control can reduce the output capacitance required to meet a specific level of performance.

8.2 Functional Block Diagram

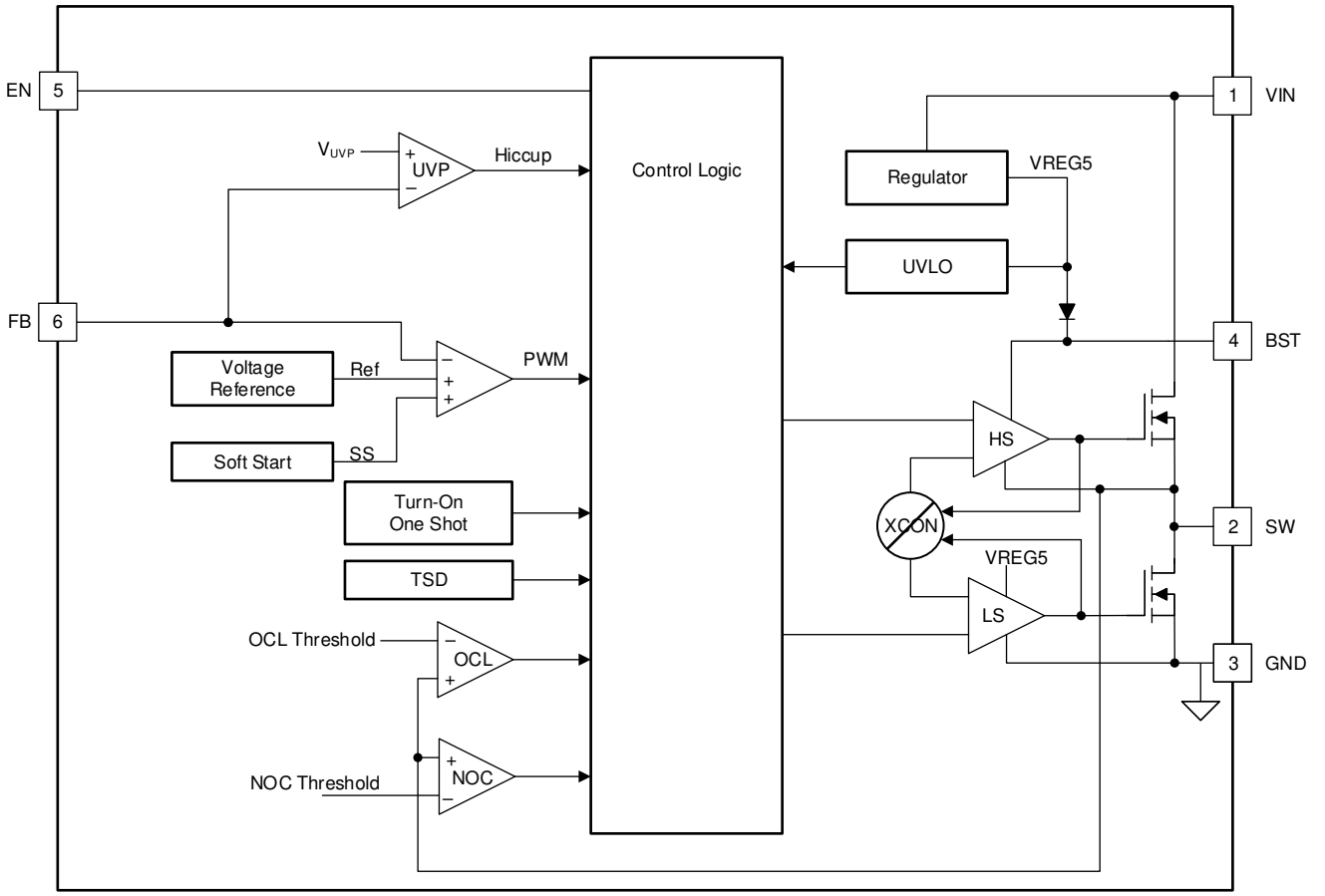

Copyright © 2019, Texas Instruments Incorporated

8.3 Feature Description

8.3.1 Adaptive On-Time Control and PWM Operation

The main control loop of the TPS563207 is an adaptive on-time pulse width modulation (PWM) controller that supports a proprietary D-CAP2 mode control. The D-CAP2 mode control combines adaptive on-time control with an internal compensation circuit for pseudo-fixed frequency and low external component count configuration with both low-ESR and ceramic output capacitors. It is stable even with virtually no ripple at the output.

At the beginning of each cycle, the high-side MOSFET is turned on. This MOSFET is turned off after an internal one-shot timer expires. This one-shot duration is set proportionally to the converter input voltage, VIN, and inversely proportional to the output voltage, V_O, to maintain a pseudo-fixed frequency over the input voltage range, hence it is called adaptive on-time control. The one-shot timer is reset and the high-side MOSFET is turned on again when the feedback voltage falls below the reference voltage. An internal ramp is added to reference voltage to simulate output ripple, eliminating the need for ESR induced output ripple from D-CAP2 mode control.

Copyright © 2020 Texas Instruments Incorporated

8.3.2 Soft Start and Pre-Biased Soft Start

The TPS563207 has an internal 1.2-ms soft start. When the EN pin becomes high, the internal soft-start function begins ramping up the reference voltage to the PWM comparator.

If the output capacitor is pre-biased at start-up, the devices initiate switching and start ramping up only after the internal reference voltage becomes greater than the feedback voltage V_{FB}. This scheme ensures that the converters ramp up smoothly into regulation point.

8.3.3 Current Protection

The output overcurrent limit (OCL) is implemented using a cycle-by-cycle valley detect control circuit. The switch current is monitored during the OFF state by measuring the low-side FET drain-to-source voltage. This voltage is proportional to the switch current. To improve accuracy, the voltage sensing is temperature compensated.

During the on-time of the high-side FET switch, the switch current increases at a linear rate determined by Vin, Vout, the on-time, and the output inductor value. During the on-time of the low-side FET switch, this current decreases linearly. The average value of the switch current is the load current I_{out}. If the monitored current is above the OCL level, the converter keeps the low-side FET on and delays the creation of a new set pulse, even the voltage feedback loop requires one, until the current level becomes OCL level or lower. In subsequent switching cycles, the on-time is set to a fixed value and the current is monitored in the same manner.

There are some important considerations for this type of overcurrent protection. The load current is higher than the overcurrent threshold by one half of the peak-to-peak inductor ripple current. Also, when the current is being limited, the output voltage tends to fall as the demanded load current can be higher than the current available from the converter. This can cause the output voltage to fall. When the FB voltage falls below the UVP threshold voltage, the UVP comparator detects it. The device will then shut down after the UVP delay time (typically 24 µs) and re-start after the hiccup time (typically 18.3 ms).

When the overcurrent condition is removed, the output voltage returns to the regulated value.

The TPS563207 also implements the negative overcurrent protection which can prevent inductor current run away. When the inductor valley current hits the negative overcurrent threshold, the low-side FET will turn off, then high-side FET will turn on.

8.3.4 Undervoltage Lockout (UVLO) Protection

UVLO protection monitors the internal regulator voltage. When the voltage is lower than the UVLO threshold voltage, the device is shut off. This protection is non-latching.

8.3.5 Thermal Shutdown

The device monitors the temperature of itself. If the temperature exceeds the threshold value (typically 172°C), the device is shut off. This is a non-latch protection.

8.4 Device Functional Modes

8.4.1 Normal Operation

When the input voltage is above the UVLO threshold and the EN voltage is above the enable threshold, the TPS563207 can operate in their normal switching modes. In continuous conduction mode (CCM), the TPS563207 operates at a quasi-fixed frequency of 580 kHz.

8.4.2 Standby Operation

The TPS563207 can be placed in standby mode by asserting the EN pin low. In standby mode, high side and low side both turn off, and Iq is less than 3 µA.

Copyright © 2020 Texas Instruments Incorporated

9 Application and Implementation

Note

Information in the following applications sections is not part of the TI component specification, and TI does not warrant its accuracy or completeness. TI's customers are responsible for determining suitability of components for their purposes. Customers should validate and test their design implementation to confirm system functionality.

9.1 Application Information

The TPS563207 device is a typical buck DC-DC converter. It is typically used to convert a higher DC voltage to a lower DC voltage with a maximum available output current of 3 A. The following design procedure can be used to select component values for the TPS563207. This section presents a simplified discussion of the design process.

9.2 Typical Application

The application schematic in Figure 9-1 was developed to meet the previous requirements. This circuit is available as the evaluation module (EVM). The sections provide the design procedure.

Figure 9-1 shows the TPS563207 4.3-V to 17-V input, 1.05-V output converter schematics.

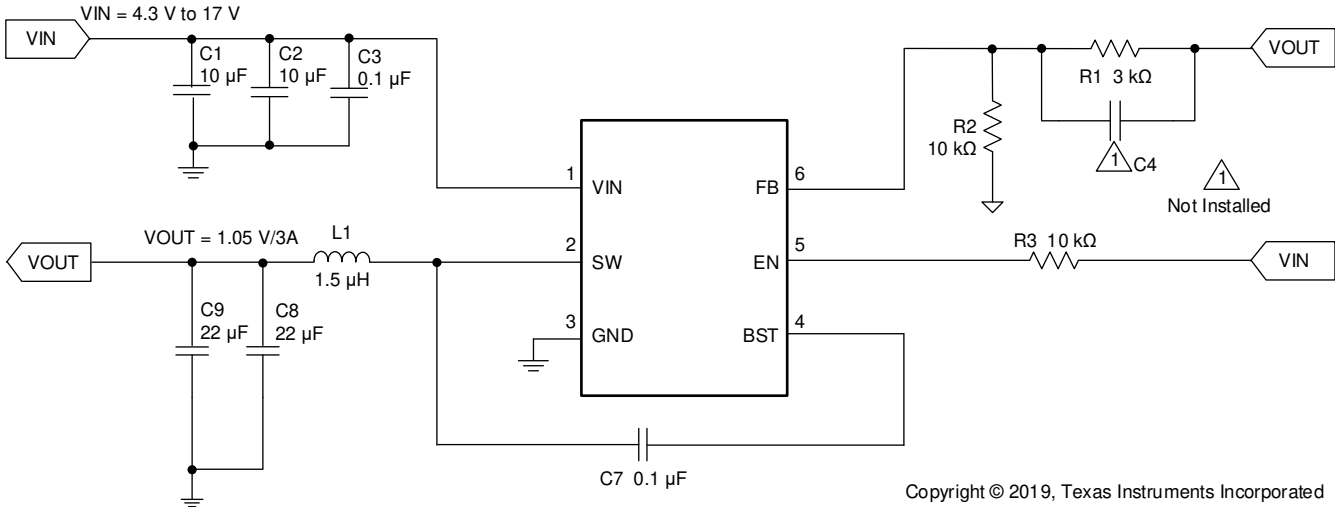

Figure 9-1. TPS563207 1.05-V/3-A Reference Design

Copyright © 2020 Texas Instruments Incorporated

9.2.1 Design Requirements

Table 9-1 shows the design parameters for this application.

Table 9-1. Design Parameters

PARAMETER	EXAMPLE VALUE
Input voltage range	4.3 to 17 V
Output voltage	1.05 V
Transient response, 1.5-A load step	ΔVout = ±5%
Input ripple voltage	100 mV
Output ripple voltage	20 mV
Output current rating	3 A
Operating frequency	580 kHz

9.2.2 Detailed Design Procedure

9.2.2.1 Output Voltage Resistors Selection

The output voltage is set with a resistor divider from the output node to the FB pin. TI recommends using 1% tolerance or better divider resistors. Start by using Equation 1 to calculate V_{OUT}.

To improve efficiency at very light loads, consider using larger value resistors. Too high of resistance will be more susceptible to noise and voltage errors from the FB input current will be more noticeable.

$$V_{out}=0.806 \times (1 + R_{FBT}/R_{FBB}) \quad (1)$$

9.2.2.2 Output Filter Selection

The LC filter used as the output filter has double pole at:

$$f_P = \frac{1}{2\pi\sqrt{L_{OUT} \times C_{OUT}}} \quad (2)$$

At low frequencies, the overall loop gain is set by the output set-point resistor divider network and the internal gain of the device. The low frequency phase is 180°. At the output filter pole frequency, the gain rolls off at a –40 dB per decade rate and the phase drops rapidly. D-CAP2 introduces a high frequency zero that reduces the gain roll off to –20 dB per decade and increases the phase to 90° one decade above the zero frequency. The inductor and capacitor for the output filter must be selected so that the double pole of Equation 2 is located below the high frequency zero but close enough that the phase boost provided be the high frequency zero provides adequate phase margin for a stable circuit. To meet this requirement, use the values recommended in Table 9-2.

Table 9-2. Recommended Component Values

OUTPUT VOLTAGE (V)	R1 (kΩ)	R2 (kΩ)	TYP L1 (µH)	C8 + C9 (µF)			CFF(pF)
				MIN	TYP	MAX	
0.85	0.55	10.0	1.5	20	44	110	-
0.9	1.2	10.0	1.5	20	44	110	-
1	2.4	10.0	1.5	20	44	110	-
1.05	3	10.0	1.5	20	44	110	-
1.2	4.9	10.0	2.2	20	44	110	-
1.5	8.6	10.0	2.2	20	44	110	-
1.8	12.3	10.0	2.2	20	44	110	-
2.5	21	10.0	2.2	20	44	110	10-220
3.3	31	10.0	3.3	20	44	110	10-220
5	52	10.0	4.7	20	44	110	10-220

Copyright © 2020 Texas Instruments Incorporated

Table 9-2. Recommended Component Values (continued)

OUTPUT VOLTAGE (V)	R1 (kΩ)	R2 (kΩ)	TYP L1 (µH)	C8 + C9 (µF)			CFF(pF)
				MIN	TYP	MAX	
6.5	70.5	10.0	6.8	20	44	110	10-220

The inductor peak-to-peak ripple current, peak current, and RMS current are calculated using Equation 3, Equation 4, and Equation 5. The inductor saturation current rating must be greater than the calculated peak current and the RMS or heating current rating must be greater than the calculated RMS current.

$$II_{P-P} = \frac{V_{OUT}}{V_{IN(MAX)}} \times \frac{V_{IN(MAX)} - V_{OUT}}{L_O \times f_{SW}} \quad (3)$$

$$II_{PEAK} = I_O + \frac{II_{P-P}}{2} \quad (4)$$

$$I_{LO(RMS)} = \sqrt{I_O^2 + \frac{1}{12} II_{P-P}^2} \quad (5)$$

The selection of minimum inductor must keep II_{P-P} smaller than 2 A.

For this design example, the calculated peak current is 3.68 A and the calculated RMS current is 3.03 A. The inductor used is a WE 74437349015.

The capacitor value and ESR determines the amount of output voltage ripple. The TPS563207 is intended for use with ceramic or other low-ESR capacitors. Recommended values range from 20 µF to 68 µF. Use Equation 6 to determine the required RMS current rating for the output capacitor.

$$I_{CO(RMS)} = \frac{V_{OUT} \times (V_{IN} - V_{OUT})}{\sqrt{12} \times V_{IN} \times L_O \times f_{SW}} \quad (6)$$

For this design, two MuRata GRM21BR61A226ME44L 22-µF output capacitors are used. The typical ESR is 2 mΩ each. The calculated RMS current is 0.286 A and each output capacitor is rated for 4 A.

9.2.2.3 Input Capacitor Selection

The TPS563207 requires an input decoupling capacitor and a bulk capacitor, depending on the application. TI recommends a ceramic capacitor over 10 µF for the decoupling capacitor. A 0.1-µF capacitor (C3) from pin 3 to ground is suggested to add to filtering high frequency noise. The capacitor voltage rating needs to be greater than the maximum input voltage.

9.2.2.4 Bootstrap Capacitor Selection

A 0.1-µF ceramic capacitor must be connected between the BST to SW pin for proper operation. TI recommends to use a ceramic capacitor.

Copyright © 2020 Texas Instruments Incorporated

9.2.3 Application Curves

Below waveforms are tested at V_{IN} = 12 V, unless otherwise noted.

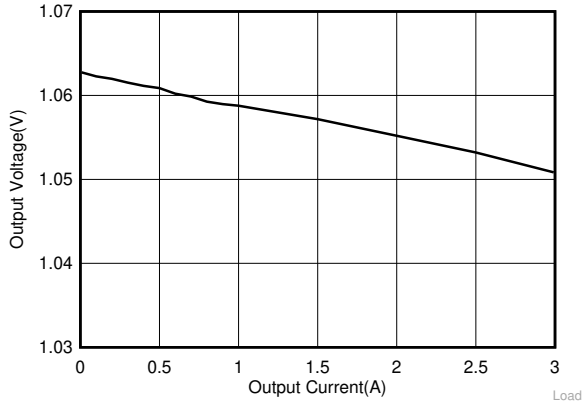

Figure 9-2. Load Regulation with Different Loading

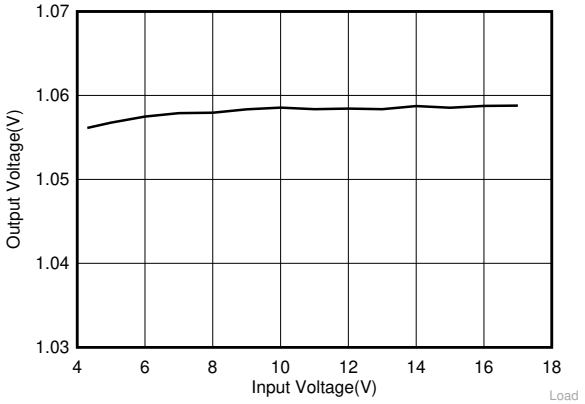

Figure 9-3. Load Regulation with Different Input Voltage

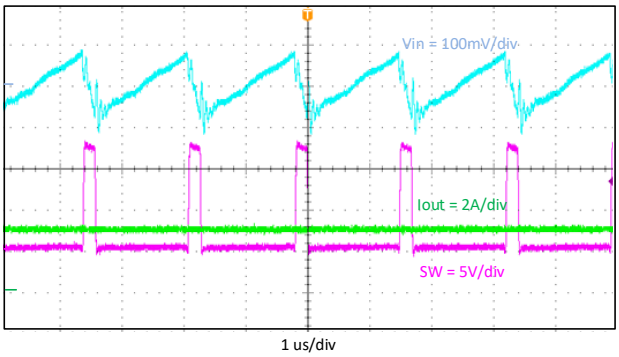

Figure 9-4. Input Voltage Ripple Iout = 3 A

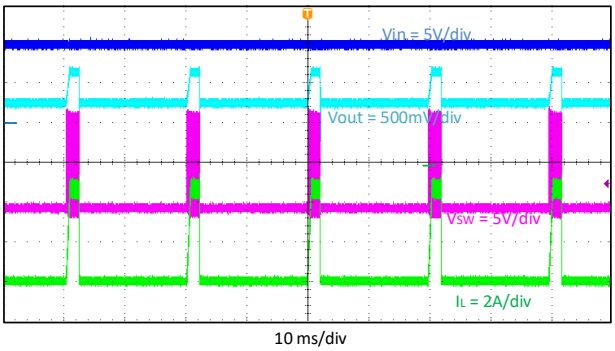

Figure 9-5. Hiccup (Short Vout Test)

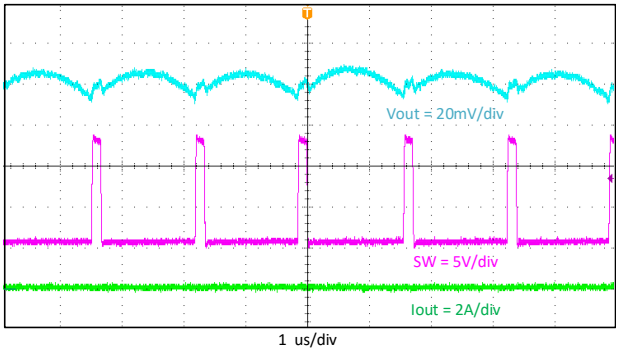

Figure 9-6. Output Voltage Ripple, Iout = 10 mA

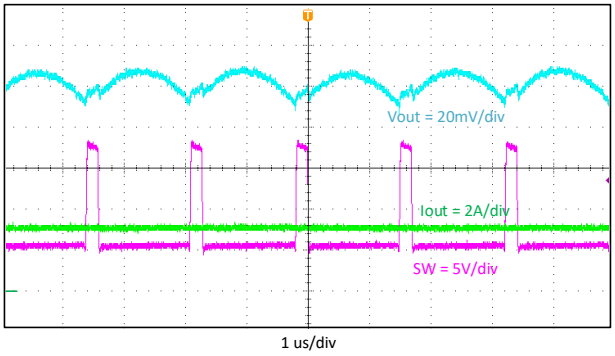

Figure 9-7. Output Voltage Ripple, Iout = 3 A

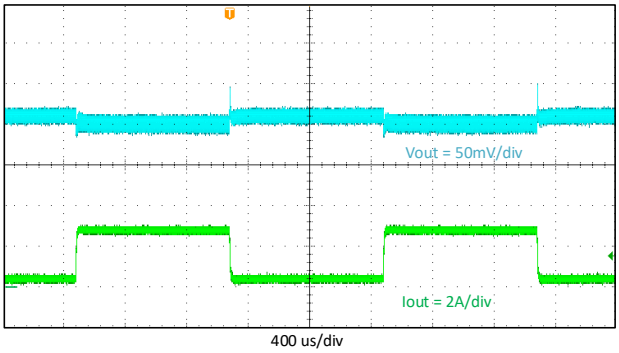

Figure 9-8. Transient Load Response, Iout = 0.3 to 2.7 A

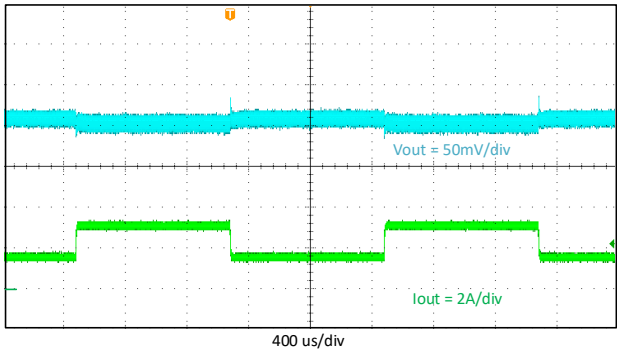

Figure 9-9. Transient Load Response, Iout = 1.5 to 3 A

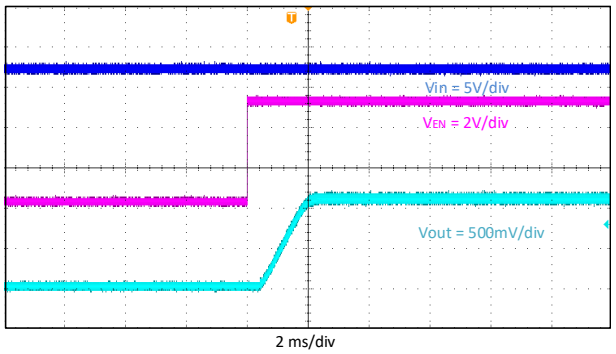

Figure 9-10. Start-Up Relative to EN

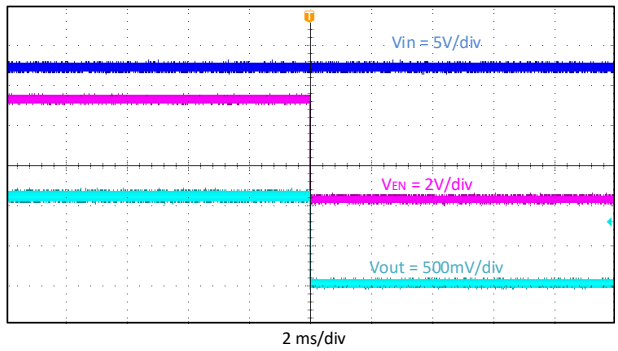

Figure 9-11. Shutdown Relative to EN

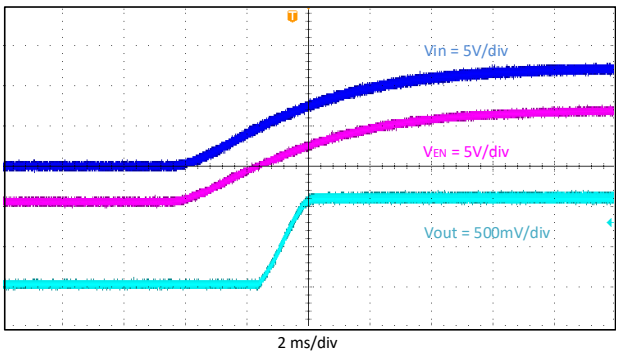

Figure 9-12. Start Up Relative to V_{IN}

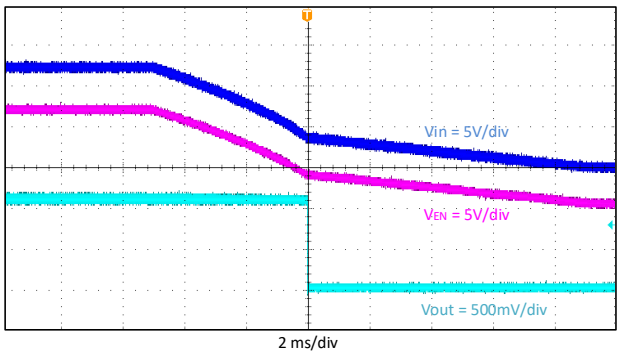

Figure 9-13. Shutdown Relative to V_{IN}

10 Power Supply Recommendations

The TPS563207 is designed to operate from input supply voltage in the range of 4.3 V to 17 V. Buck converters require the input voltage to be higher than the output voltage for proper operation. The maximum recommended operating duty cycle is 75%. Using that criteria, the minimum recommended input voltage is VO / 0.75.

Copyright © 2020 Texas Instruments Incorporated

11 Layout

11.1 Layout Guidelines

1. VIN and GND traces should be as wide as possible to reduce trace impedance. The wide areas are also of advantage from the view point of heat dissipation.
2. The input capacitor and output capacitor should be placed as close to the device as possible to minimize trace impedance.
3. Provide sufficient vias for the input capacitor and output capacitor.
4. Keep the SW trace as physically short and wide as practical to minimize radiated emissions.
5. Do not allow switching current to flow under the device.
6. A separate VOUT path should be connected to the upper feedback resistor.
7. Make a Kelvin connection to the GND pin for the feedback path.
8. Voltage feedback loop should be placed away from the high-voltage switching trace, and preferably has ground shield.
9. The trace of the FB node should be as small as possible to avoid noise coupling.
10. The GND trace between the output capacitor and the GND pin should be as wide as possible to minimize its trace impedance.

11.2 Layout Example

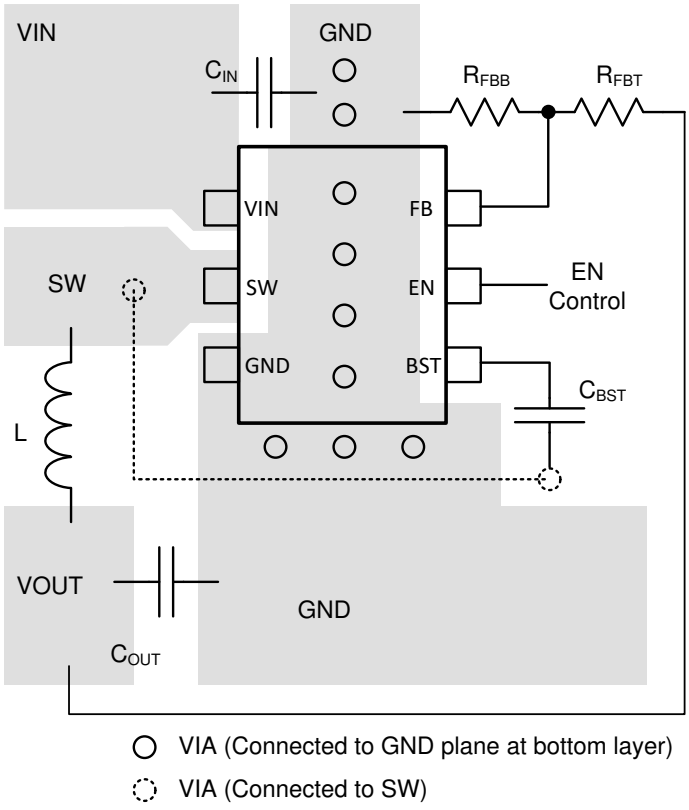

Figure 11-1. TPS563207 Layout

Copyright © 2020 Texas Instruments Incorporated

12 Device and Documentation Support

12.1 Receiving Notification of Documentation Updates

To receive notification of documentation updates, navigate to the device product folder on ti.com. Click on *Subscribe to updates* to register and receive a weekly digest of any product information that has changed. For change details, review the revision history included in any revised document.

12.2 Support Resources

TI E2E™ support forums are an engineer's go-to source for fast, verified answers and design help — straight from the experts. Search existing answers or ask your own question to get the quick design help you need.

Linked content is provided "AS IS" by the respective contributors. They do not constitute TI specifications and do not necessarily reflect TI's views; see TI's Terms of Use.

12.3 Trademarks

D-CAP2™ and TI E2E™ are trademarks of Texas Instruments.
All other trademarks are the property of their respective owners.

12.4 Electrostatic Discharge Caution



This integrated circuit can be damaged by ESD. Texas Instruments recommends that all integrated circuits be handled with appropriate precautions. Failure to observe proper handling and installation procedures can cause damage.

ESD damage can range from subtle performance degradation to complete device failure. Precision integrated circuits may be more susceptible to damage because very small parametric changes could cause the device not to meet its published specifications.

12.5 Glossary

TI Glossary This glossary lists and explains terms, acronyms, and definitions.

13 Mechanical, Packaging, and Orderable Information

The following pages include mechanical, packaging, and orderable information. This information is the most current data available for the designated devices. This data is subject to change without notice and revision of this document. For browser-based versions of this data sheet, refer to the left-hand navigation.

Copyright © 2020 Texas Instruments Incorporated



PACKAGE OUTLINE

DRL0006A

SOT - 0.6 mm max height

PLASTIC SMALL OUTLINE

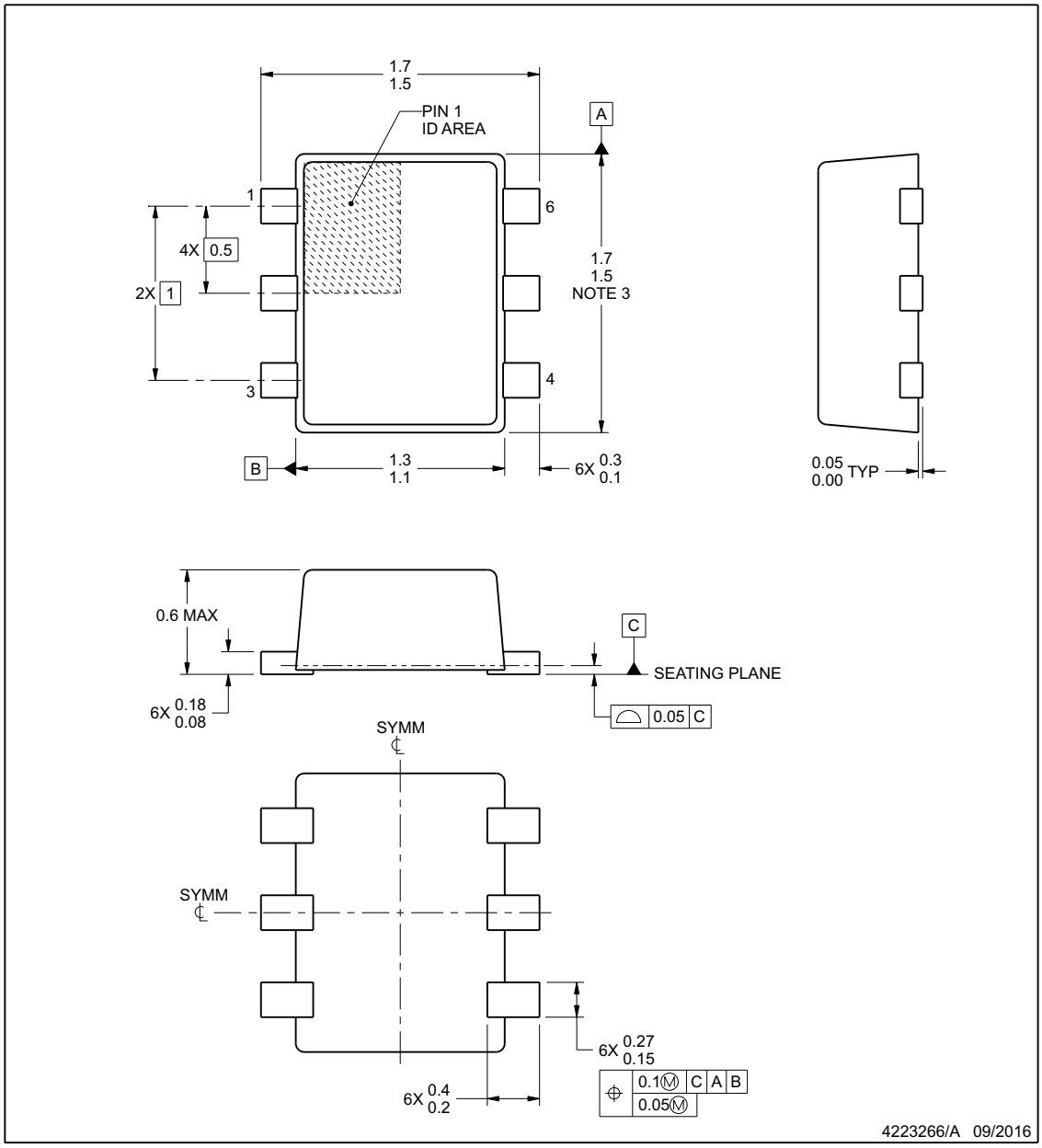

NOTES:

1. All linear dimensions are in millimeters. Any dimensions in parenthesis are for reference only. Dimensioning and tolerancing per ASME Y14.5M.
2. This drawing is subject to change without notice.
3. This dimension does not include mold flash, protrusions, or gate burrs. Mold flash, protrusions, or gate burrs shall not exceed 0.15 mm per side.

Copyright © 2020 Texas Instruments Incorporated

EXAMPLE BOARD LAYOUT

DRL0006A

SOT - 0.6 mm max height

PLASTIC SMALL OUTLINE

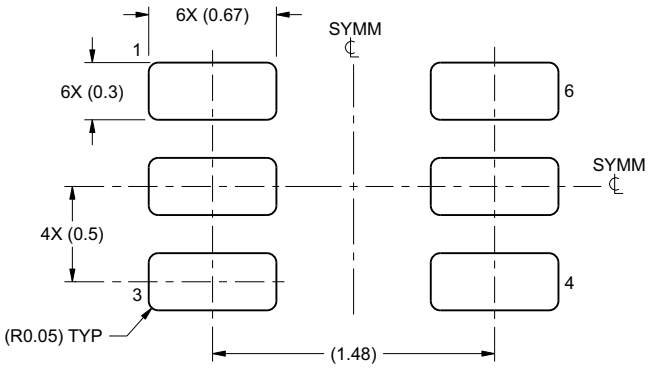

LAND PATTERN EXAMPLE
SCALE:30X

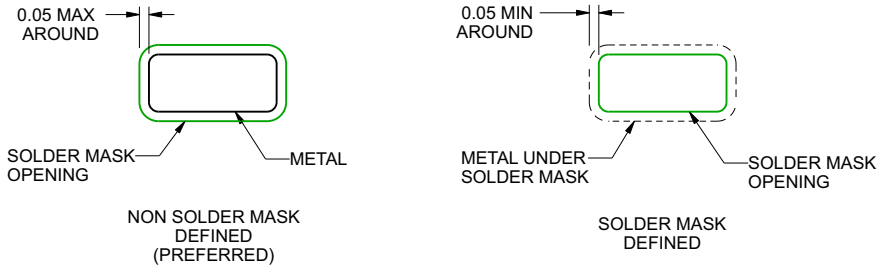

SOLDERMASK DETAILS

4223266/A 09/2016

NOTES: (continued)

4. Publication IPC-7351 may have alternate designs.
5. Solder mask tolerances between and around signal pads can vary based on board fabrication site.

Copyright © 2020 Texas Instruments Incorporated

EXAMPLE STENCIL DESIGN

DRL0006A

SOT - 0.6 mm max height

PLASTIC SMALL OUTLINE

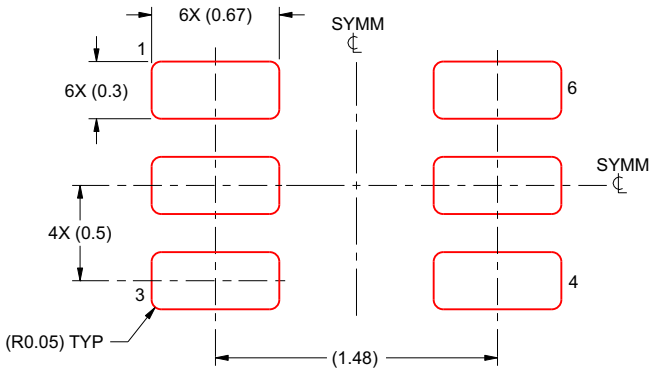

SOLDER PASTE EXAMPLE
BASED ON 0.1 mm THICK STENCIL
SCALE:30X

4223266/A 09/2016

NOTES: (continued)

6. Laser cutting apertures with trapezoidal walls and rounded corners may offer better paste release. IPC-7525 may have alternate design recommendations.
7. Board assembly site may have different recommendations for stencil design.

Copyright © 2020 Texas Instruments Incorporated

PACKAGING INFORMATION

Orderable Device	Status (1)	Package Type	Package Drawing	Pins	Package Qty	Eco Plan (2)	Lead finish/ Ball material (6)	MSL Peak Temp (3)	Op Temp (°C)	Device Marking (4/5)	Samples
TPS563207DRLR	PREVIEW	SOT-5X3	DRL	6	4000	TBD	Call TI	Call TI	-40 to 150	3207	

(1) The marketing status values are defined as follows:
ACTIVE: Product device recommended for new designs.
LIFEBUY: TI has announced that the device will be discontinued, and a lifetime-buy period is in effect.
NRND: Not recommended for new designs. Device is in production to support existing customers, but TI does not recommend using this part in a new design.
PREVIEW: Device has been announced but is not in production. Samples may or may not be available.
OBSOLETE: TI has discontinued the production of the device.

(2) **RoHS:** TI defines "RoHS" to mean semiconductor products that are compliant with the current EU RoHS requirements for all 10 RoHS substances, including the requirement that RoHS substance do not exceed 0.1% by weight in homogeneous materials. Where designed to be soldered at high temperatures, "RoHS" products are suitable for use in specified lead-free processes. TI may reference these types of products as "Pb-Free".
RoHS Exempt: TI defines "RoHS Exempt" to mean products that contain lead but are compliant with EU RoHS pursuant to a specific EU RoHS exemption.
Green: TI defines "Green" to mean the content of Chlorine (Cl) and Bromine (Br) based flame retardants meet JS709B low halogen requirements of <=1000ppm threshold. Antimony trioxide based flame retardants must also meet the <=1000ppm threshold requirement.

(3) MSL, Peak Temp. - The Moisture Sensitivity Level rating according to the JEDEC industry standard classifications, and peak solder temperature.

(4) There may be additional marking, which relates to the logo, the lot trace code information, or the environmental category on the device.

(5) Multiple Device Markings will be inside parentheses. Only one Device Marking contained in parentheses and separated by a "~" will appear on a device. If a line is indented then it is a continuation of the previous line and the two combined represent the entire Device Marking for that device.

(6) Lead finish/Ball material - Orderable Devices may have multiple material finish options. Finish options are separated by a vertical ruled line. Lead finish/Ball material values may wrap to two lines if the finish value exceeds the maximum column width.

Important Information and Disclaimer: The information provided on this page represents TI's knowledge and belief as of the date that it is provided. TI bases its knowledge and belief on information provided by third parties, and makes no representation or warranty as to the accuracy of such information. Efforts are underway to better integrate information from third parties. TI has taken and continues to take reasonable steps to provide representative and accurate information but may not have conducted destructive testing or chemical analysis on incoming materials and chemicals. TI and TI suppliers consider certain information to be proprietary, and thus CAS numbers and other limited information may not be available for release.

In no event shall TI's liability arising out of such information exceed the total purchase price of the TI part(s) at issue in this document sold by TI to Customer on an annual basis.

IMPORTANT NOTICE AND DISCLAIMER

TI PROVIDES TECHNICAL AND RELIABILITY DATA (INCLUDING DATASHEETS), DESIGN RESOURCES (INCLUDING REFERENCE DESIGNS), APPLICATION OR OTHER DESIGN ADVICE, WEB TOOLS, SAFETY INFORMATION, AND OTHER RESOURCES “AS IS” AND WITH ALL FAULTS, AND DISCLAIMS ALL WARRANTIES, EXPRESS AND IMPLIED, INCLUDING WITHOUT LIMITATION ANY IMPLIED WARRANTIES OF MERCHANTABILITY, FITNESS FOR A PARTICULAR PURPOSE OR NON-INFRINGEMENT OF THIRD PARTY INTELLECTUAL PROPERTY RIGHTS.

These resources are intended for skilled developers designing with TI products. You are solely responsible for (1) selecting the appropriate TI products for your application, (2) designing, validating and testing your application, and (3) ensuring your application meets applicable standards, and any other safety, security, or other requirements. These resources are subject to change without notice. TI grants you permission to use these resources only for development of an application that uses the TI products described in the resource. Other reproduction and display of these resources is prohibited. No license is granted to any other TI intellectual property right or to any third party intellectual property right. TI disclaims responsibility for, and you will fully indemnify TI and its representatives against, any claims, damages, costs, losses, and liabilities arising out of your use of these resources.

TI’s products are provided subject to TI’s Terms of Sale (www.ti.com/legal/termsofsale.html) or other applicable terms available either on ti.com or provided in conjunction with such TI products. TI’s provision of these resources does not expand or otherwise alter TI’s applicable warranties or warranty disclaimers for TI products.

Mailing Address: Texas Instruments, Post Office Box 655303, Dallas, Texas 75265
Copyright © 2020, Texas Instruments Incorporated