User's Guide
SLUUBL7–February 2017

TPS543C20, 80-A Dual Phase Stackable Evaluation Module

This user's guide describes the characteristics, operation, and use of the TPS543C20 Evaluation Module (EVM). The user's guide includes test information, descriptions, and results. A complete schematic diagram, printed-circuit board layouts, and bill of materials are also included in this document. Throughout this user's guide, the abbreviations *EVM*, *TPS543C20EVM*, and the term *evaluation module* are synonymous with the TPS543C20EVM-869, unless otherwise noted.

Contents

1 Introduction 3
1.1 Before You Begin 3
2 Description 4
2.1 Typical End-User Applications 4
2.2 EVM Features 4
3 EVM Electrical Performance Specifications 4
4 Schematic 5
5 Test Equipment 6
6 TPS543C20EVM-869 7
7 List of Test Points, Jumpers, and Switches 8
8 Test Procedure 9
8.1 Line and Load Regulation Measurement Procedure 9
8.2 Efficiency 9
8.3 Equipment Shutdown 10
9 Performance Data and Typical Characteristic Curves 10
9.1 Load Regulation 10
9.2 Efficiency 10
9.3 Power Loss 11
9.4 Transient Response 11
9.5 Output Ripple 13
9.6 Enable On 14
9.7 Control On and Off 15
9.8 Thermal Image 16
10 EVM Assembly Drawing and PCB Layout 17
11 List of Materials 22

List of Figures

1 TPS543C20EVM-869 Schematic 5
2 TPS543C20EVM-869 Overview 7
3 Tip and Barrel Measurement 7
4 Load Regulation of 0.9-V Output vs Load 10
5 Efficiency of 0.9-V Efficiency vs Load 10
6 Power Loss of 0.9-V Power Loss vs Load 11
7 Transient Response of 0.9-V Output at 12 V_{IN}, Transient is 25 A to 50 A, Step is 25 A at 30 A/µs 11
8 Transient Response of 25-A to 50-A Load at 30 A/µs Rise 12
9 Transient Response of 50-A to 25-A Load at 30 A/µs Fall 12
10 Output Ripple and SW Node of 0.9-V Output at 12 V_{IN}, 80-A Output 13

Copyright © 2017, Texas Instruments Incorporated

11 Output Ripple and SW Node of 0.9-V Output at 12 V_{IN}, 0-A Output 13
12 Start up from Enable, 0.9-V Output at 12 V_{IN}, 80-A Output 14
13 0.6-V Pre-Bias Start Up From Enable, 0.9-V Output at 12 V_{IN}, 0-A Output 14
14 Output Voltage Start-up and Shutdown, 0.9-V Output at 12 V_{IN}, 5-A Output 15
15 Master-Slave 180° Synchronization 15
16 Thermal Image at 0.9-V Output at 12 V_{IN}, 80-A Output, at 25°C Ambient 16
17 TPS543C20EVM-869 Top Layer Assembly Drawing (Top View) 17
18 TPS543C20EVM-869 Top Solder Mask (Top View) 17
19 TPS543C20EVM-869 Top Layer (Top View) 18
20 TPS543C20EVM-869 Inner Layer 1 (Top View) 18
21 TPS543C20EVM-869 Inner Layer 2 (Top View) 19
22 TPS543C20EVM-869 Inner Layer 3 (Top View) 19
23 TPS543C20EVM-869 Inner Layer 4 (Top View) 20
24 TPS543C20EVM-869 Bottom Layer (Top View) 20
25 TPS543C20EVM-869 Bottom Solder Mask (Top View) 21
26 TPS543C20EVM-869 Bottom Overlay Layer (Top View) 21

List of Tables

1 TPS543C20EVM-869 Electrical Performance Specifications 4
2 Test Point Functions 8
3 List of Test Points for Line and Load Measurements 9
4 List of Test Points for Efficiency Measurements 9
5 TPS543C20EVM-869 List of Materials 22

Trademarks

All trademarks are the property of their respective owners.

Copyright © 2017, Texas Instruments Incorporated

1 Introduction

The TPS543C20EVM-869 uses the TPS543C20 device. The TPS543C20 is a highly integrated synchronous buck converter that is designed for up to 40-A current output per phase.

1.1 Before You Begin

The following warnings and cautions are noted for the safety of anyone using or working close to the TPS543C20EVM-869. Observe all safety precautions.



Warning The TPS543C20EVM-869 circuit module may become hot during operation due to dissipation of heat. Avoid contact with the board. Follow all applicable safety procedures applicable to your laboratory.



Caution Do not leave the EVM powered when unattended.

WARNING

The circuit module has signal traces, components, and component leads on the bottom of the board. This may result in exposed voltages, hot surfaces or sharp edges. Do not reach under the board during operation.

CAUTION

The circuit module may be damaged by over temperature. To avoid damage, monitor the temperature during evaluation and provide cooling, as needed, for your system environment.

CAUTION

Some power supplies can be damaged by application of external voltages. If using more than one power supply, check your equipment requirements and use blocking diodes or other isolation techniques, as needed, to prevent damage to your equipment.

CAUTION

The communication interface is not isolated on the EVM. Be sure no ground potential exists between the computer and the EVM. Also be aware that the computer is referenced to the Battery- potential of the EVM.

Copyright © 2017, Texas Instruments Incorporated

2 Description

The TPS543C20EVM-869 is a two-phase, buck converter with two stacked TPS543C20 devices. It uses a nominal 12-V bus to produce a regulated 0.9-V output at up to 80-A load current (40-A per phase). The TPS543C20EVM-869 is designed to demonstrate the stacking operation of the TPS543C20 in a two-phase, low-output-voltage application while providing a number of test points to evaluate the performance of the devices. The TPS543C20EVM-869 can be modified to two separated single-phase, buck converters by changing the components assembled. Refer to the TPS543C20 data sheet (SLUSCD4) for more information on single-phase configuration.

2.1 Typical End-User Applications

- Enterprise storage, SSD, NAS
- Wireless and wired communication infrastructure
- Industrial PCs, automation, ATE, PLC, video surveillance
- Enterprise server, switches, routers
- ASIC, SoC, FPGA, DSP core, and I/O rails

2.2 EVM Features

- Regulated 0.9-V output up to 80-A, steady-state output current
- Convenient test points for probing critical waveforms

3 EVM Electrical Performance Specifications

Table 1. TPS543C20EVM-869 Electrical Performance Specifications

Parameter		Test Conditions	Min	Typ	Max	Units
Input Characteristics						
	Voltage range	V_{IN} tied to VDD	5	12	16	V
	Maximum input current	V_{IN} = 12 V, I_O = 40 A, V_{OUT} = 0.9 V, F_{SW} = 500 kHz			17	A
	No load input current	V_{IN} = 12 V, I_O = 0 A		105		mA
Output Characteristics						
V_{OUT}	Output voltage	Output current = 0 A to 80 A		0.9		V
I_{OUT}	Output load current	$I_{OUT(min)}$ to $I_{OUT(max)}$	0		80	A
	Output voltage regulation	Line regulation: input voltage = 5 V to 16 V		0.5%		
		Load regulation: output current = 0 A to $I_{OUT(max)}$		0.5%		
V_{OUT}	Output voltage ripple	V_{IN} = 12 V, I_{OUT} = 40 A		10		mV_{PP}
V_{OUT}	Output overcurrent			96		A
Systems Characteristics						
	Switching frequency	F_{SW}		500		kHz
V_{OUT}	Peak efficiency	V_{IN} = 12 V, I_O = 30 A, F_{SW} = 500 kHz		90%		
	Operating temperature	T_{oper}	0		85	ºC

Copyright © 2017, Texas Instruments Incorporated

4 Schematic

Figure 1 illustrates the EVM schematic.

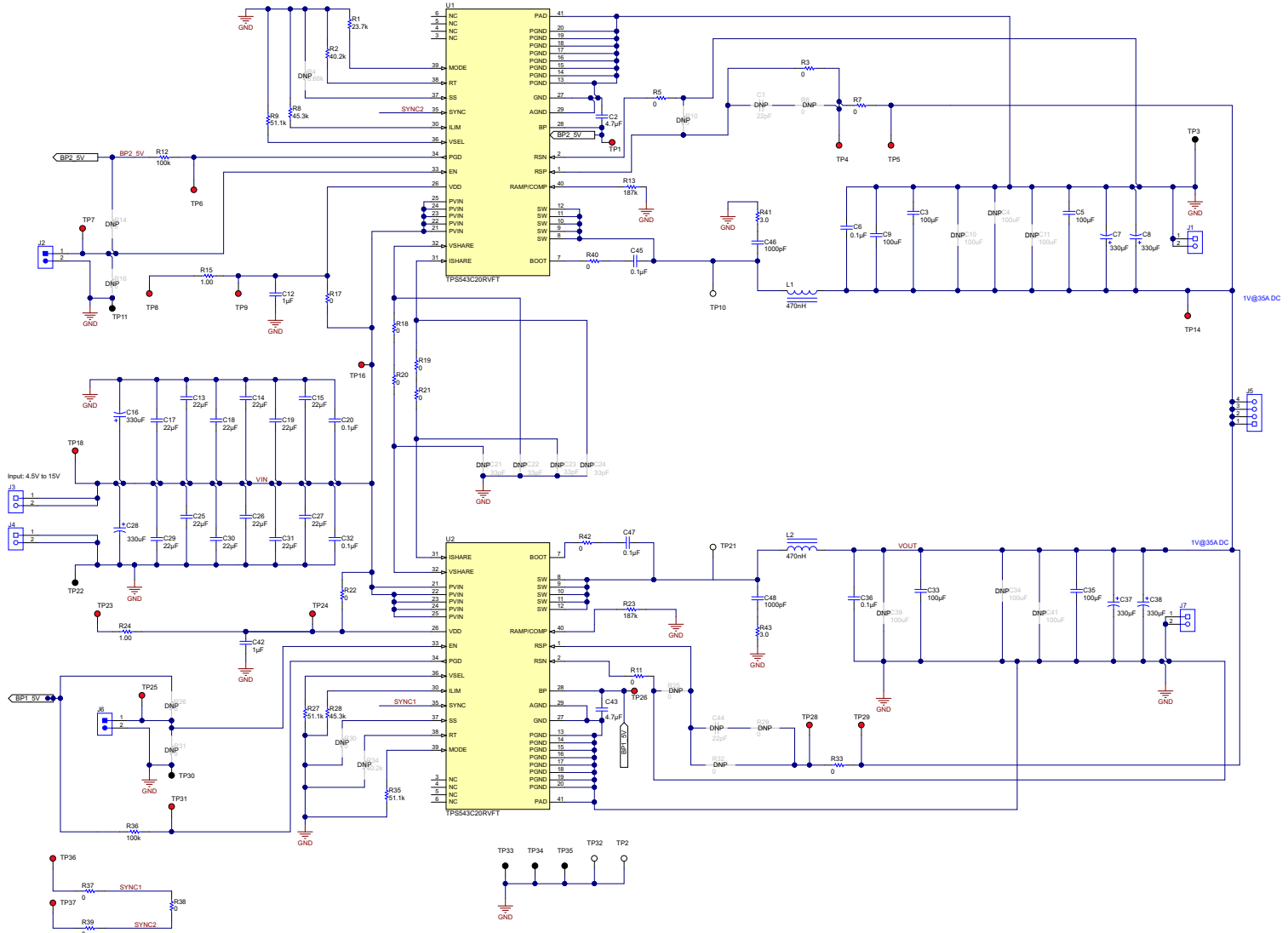

Figure 1. TPS543C20EVM-869 Schematic

Copyright © 2017, Texas Instruments Incorporated

5 Test Equipment

Voltage source: The input voltage source, V_{IN}, must be a 0-V to 18-V variable DC source capable of supplying at least 20 A_{DC}.

Multimeters: It is recommended to use two separate multimeters. One meter is used to measure V_{IN} and one to measure V_{OUT}.

Output load: A variable electronic load is recommended for testing. It must be capable of 100 A at voltages as low as 0.6 V.

Oscilloscope: An oscilloscope is recommended for measuring output noise and ripple. Output ripple must be measured using a tip-and-barrel method or better as shown in Figure 3. The scope must be adjusted to 20-MHz bandwidth, AC coupling at 50 mV/division, and must be set to 1 µs/division.

Fan: During prolonged operation at high loads, it may be necessary to provide forced air cooling with a small fan aimed at the EVM. Temperature of the devices on the EVM must be maintained below 105°C.

Recommended wire gauge: The voltage drop in the load wires must be kept as low as possible in order to keep the working voltage at the load within its operating range. Use the AWG 14 wire (2 wires parallel for VOUT positive and 2 wires parallel for the VOUT negative) of no more than 1.98 feet between the EVM and the load. This recommended wire gauge and length should achieve a voltage drop of no more than 0.2 V at the maximum 80-A load.

Copyright © 2017, Texas Instruments Incorporated

6 TPS543C20EVM-869

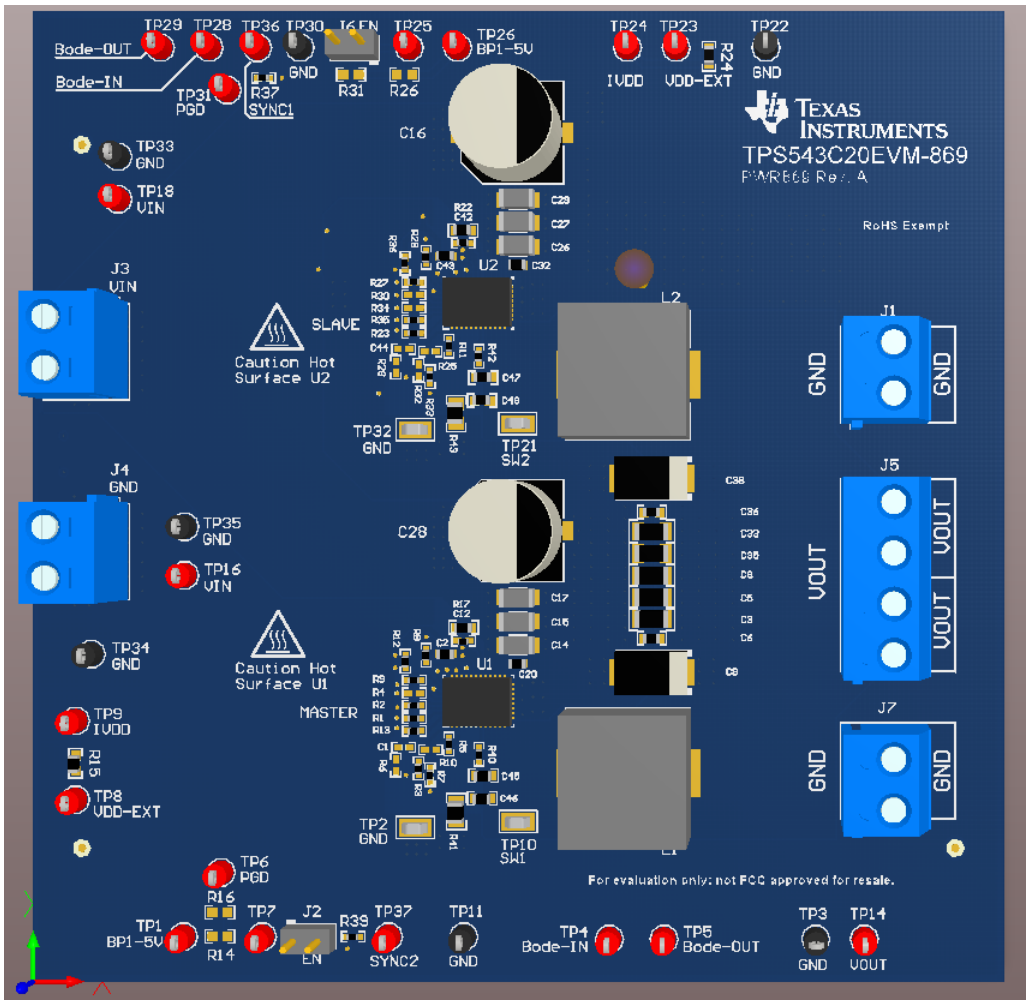

Figure 2. TPS543C20EVM-869 Overview

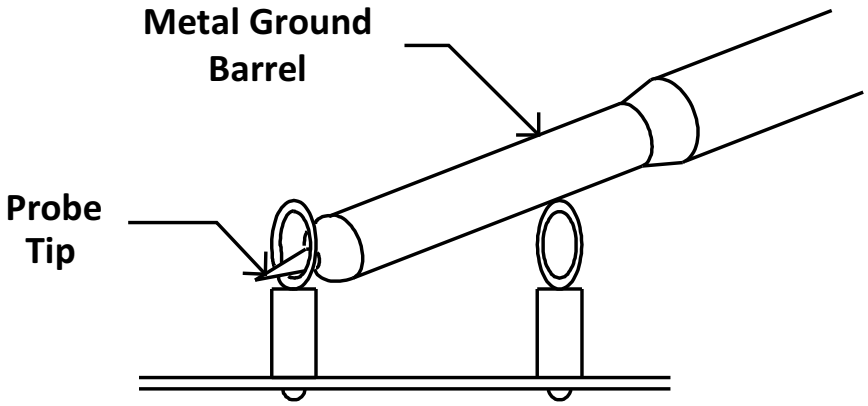

Figure 3. Tip and Barrel Measurement

Copyright © 2017, Texas Instruments Incorporated

7 List of Test Points, Jumpers, and Switches

Table 2 lists the test point functions.

Table 2. Test Point Functions

Item	Type	Name	Description
TP10	T-H loop	SW1	Power supply switch node (MASTER)
TP21	T-H loop	SW2	Power supply switch node (SLAVE)
TP4	T-H loop	Bode-IN	Measure loop stability (MASTER)
TP28	T-H loop	Bode-IN	Measure loop stability (SLAVE)
TP5	T-H loop	Bode-OUT	Measure loop stability (MASTER)
TP29	T-H loop	Bode-OUT	Measure loop stability (SLAVE)
TP14	T-H loop	VOUT	Sense VOUT + locally across C9. Use for efficiency and ripple measurements
TP3	T-H loop	GND	Sense VOUT - locally across C9. Use for efficiency and ripple measurements
TP16	T-H loop	VIN	Sense VIN + across C14 (MASTER)
TP18	T-H loop	VIN	Sense VIN + across C26 (SLAVE)
TP35	T-H loop	GND	Sense VIN - across C14 (MASTER)
TP33	T-H loop	GND	Sense VIN - across C26 (SLAVE)
TP9	T-H loop	VDD	Supplies the internal circuitry (MASTER)
TP24	T-H loop	VDD	Supplies the internal circuitry (SLAVE)
TP1	T-H loop	BP1-5V	LDO output (MASTER)
TP26	T-H loop	BP1-5V	LDO output (SLAVE)
TP6	T-H loop	PGD	Power good (MASTER)
TP31	T-H loop	PGD	Power good (SLAVE)
TP2, TP3, TP11, TP22, TP30, TP32-TP35	T-H loop	PGND	Common GND
J2	2-pin jumper	EN	Enable or disable TPS543C20 IC (MASTER)
J6	2-pin jumper	EN	Enable or disable TPS543C20 IC (SLAVE)
TP37	T-H loop	SYNC2	Synchronize with external switching frequency (MASTER)
TP36	T-H loop	SYNC1	Synchronize with external switching frequency (SLAVE)

Copyright © 2017, Texas Instruments Incorporated

8 Test Procedure

8.1 Line and Load Regulation Measurement Procedure

Use the following procedures for line and load regulation measurement:

1. Connect the electronic load (+) to J5 and electronic load (–) to J1 and J7 (Figure 2).
2. Ensure that the electronic load is set to draw 0 A_{DC}.
3. Ensure the jumper provided on the EVM shorts on J2 and J6 before V_{IN} is applied
4. Connect input power supply (+) to J3 and input power supply (–) to J4 (Figure 2).
5. Increase V_{IN} from 0 V to 12 V using the digital multimeter to measure input voltage.
6. Remove the jumper on J2 and J6 to enable the controller.
7. Use the other digital multimeter or the oscilloscope to measure output voltage V_{OUT} at TP14 and TP3.

Table 3. List of Test Points for Line and Load Measurements

Test Point	Node Name	Description
TP14	VOUT	Sense VOUT+ locally across C9. Use for load and line measurements
TP3	GND	Sense VOUT– locally across C9. Use for load and line measurements
TP16 or TP18	VIN	Sense VIN+ across C14 or C26
TP35 or TP33	GND	Sense VIN– across C14 or C26

8. Vary the load from 0 A_{DC} to maximum rated output 80 A_{DC}. V_{OUT} must remain in regulation as defined in Table 1.
9. Vary V_{IN} from 5 V to 16 V. V_{OUT} must remain in regulation as defined in Table 1.
10. Decrease the load to 0 A.
11. Put the jumper back on J2 and J6 to disable the converter.
12. Decrease V_{IN} to 0 V or turn off the supply.

8.2 Efficiency

To measure the efficiency of the power train on the EVM, it is important to measure the voltages at the correct location. This is necessary; otherwise, the measurements will include losses in efficiency that are not related to the power train itself. Losses incurred by the voltage drop in the copper traces and in the input and output connectors are not related to the efficiency of the power train, and they must not be included in efficiency measurements.

Table 4. List of Test Points for Efficiency Measurements

Test Point	Node Name	Description
TP14	VOUT	Sense VOUT+ locally across C9. Use for efficiency and ripple measurements
TP3	GND	Sense VOUT– locally across C9. Use for efficiency and ripple measurements
TP16 or TP18	VIN	Sense VIN + across C14 or C26
TP35 or TP33	GND	Sense VIN– across C14 or C26

Input current can be measured at any point in the input wires, and output current can be measured anywhere in the output wires of the output being measured. Using these measurement points result in efficiency measurements that do not include losses due to the connectors and PCB traces.

Copyright © 2017, Texas Instruments Incorporated

8.3 Equipment Shutdown

Use the following steps for equipment shutdown:

1. Reduce the load current to 0 A.
2. Reduce the input voltage to 0 V.
3. Shut down the external fan, if in use.
4. Shut down equipment.

9 Performance Data and Typical Characteristic Curves

Figure 4 through Figure 16 present typical performance curves for the TPS543C20EVM-869.

9.1 Load Regulation

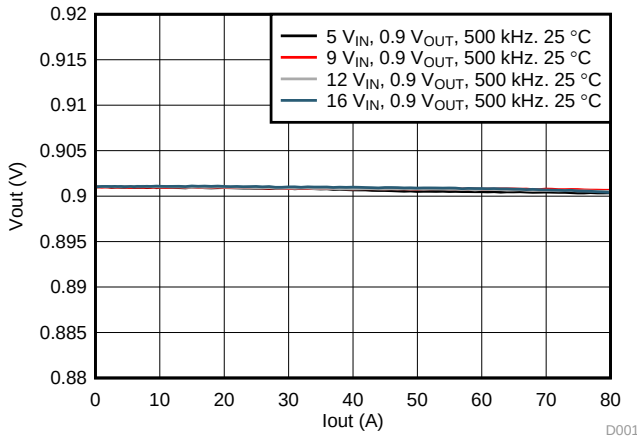

Figure 4. Load Regulation of 0.9-V Output vs Load

9.2 Efficiency

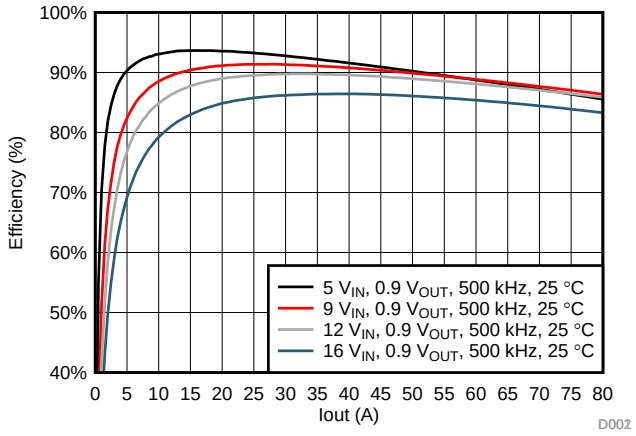

Figure 5. Efficiency of 0.9-V Efficiency vs Load

Copyright © 2017, Texas Instruments Incorporated

9.3 Power Loss

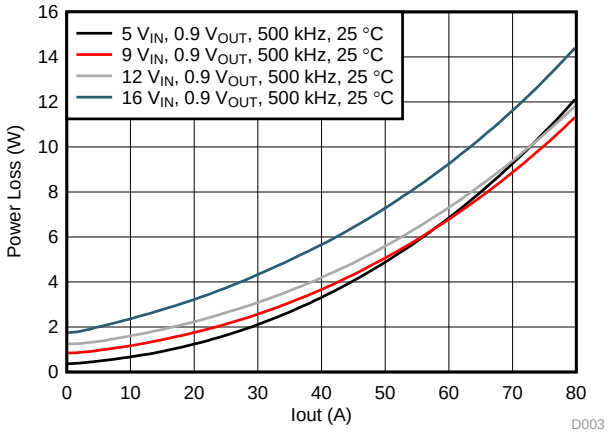

Figure 6. Power Loss of 0.9-V Power Loss vs Load

9.4 Transient Response



Figure 7. Transient Response of 0.9-V Output at 12 V_{IN}, Transient is 25 A to 50 A, Step is 25 A at 30 A/µs

Copyright © 2017, Texas Instruments Incorporated

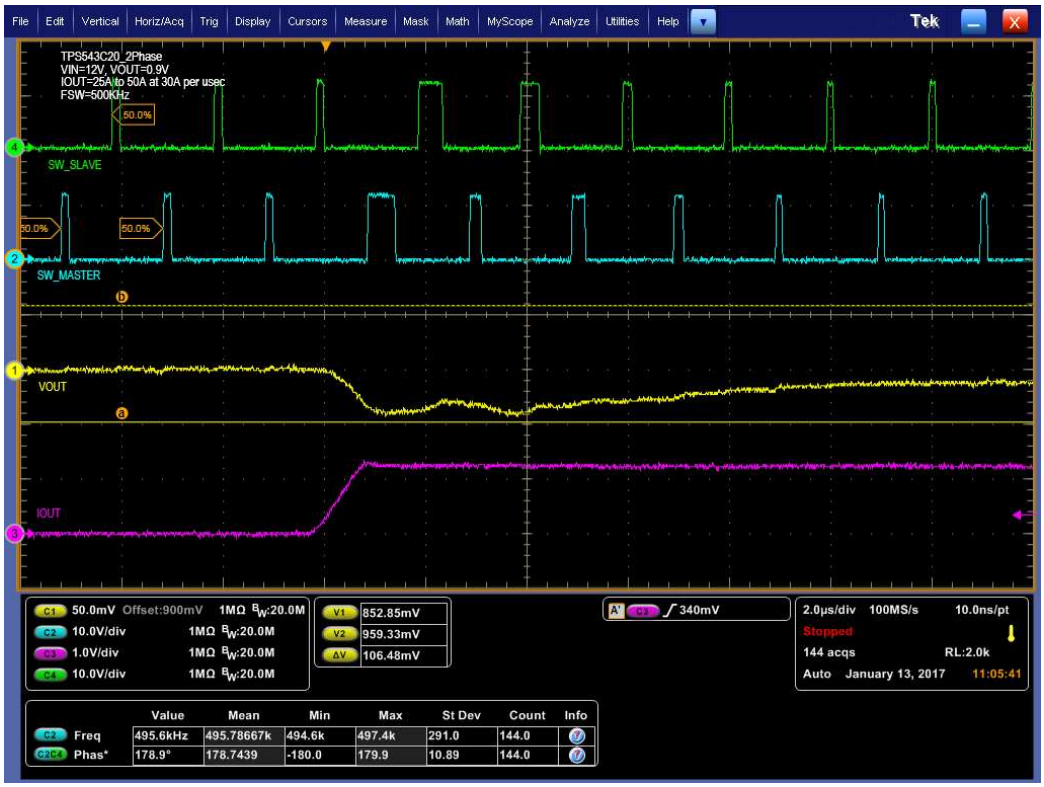

Figure 8. Transient Response of 25-A to 50-A Load at 30 A/µs Rise

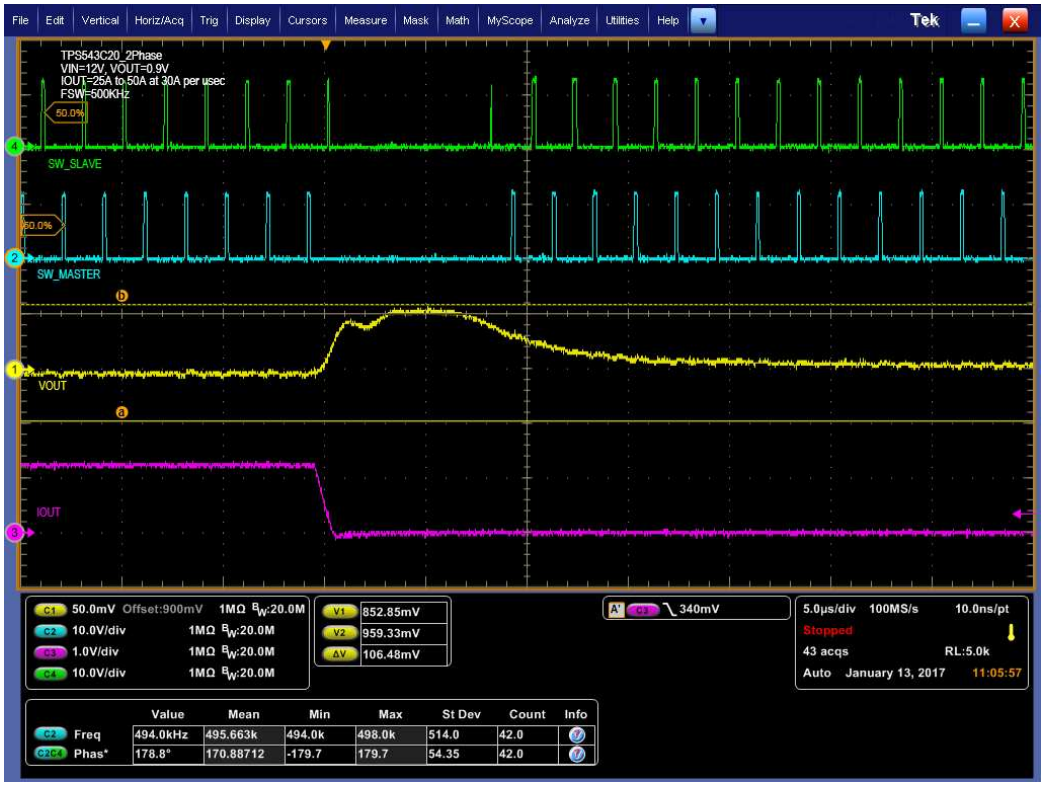

Figure 9. Transient Response of 50-A to 25-A Load at 30 A/µs Fall

Copyright © 2017, Texas Instruments Incorporated

9.5 Output Ripple



Figure 10. Output Ripple and SW Node of 0.9-V Output at 12 V_{IN}, 80-A Output



Figure 11. Output Ripple and SW Node of 0.9-V Output at 12 V_{IN}, 0-A Output

Copyright © 2017, Texas Instruments Incorporated

9.6 Enable On

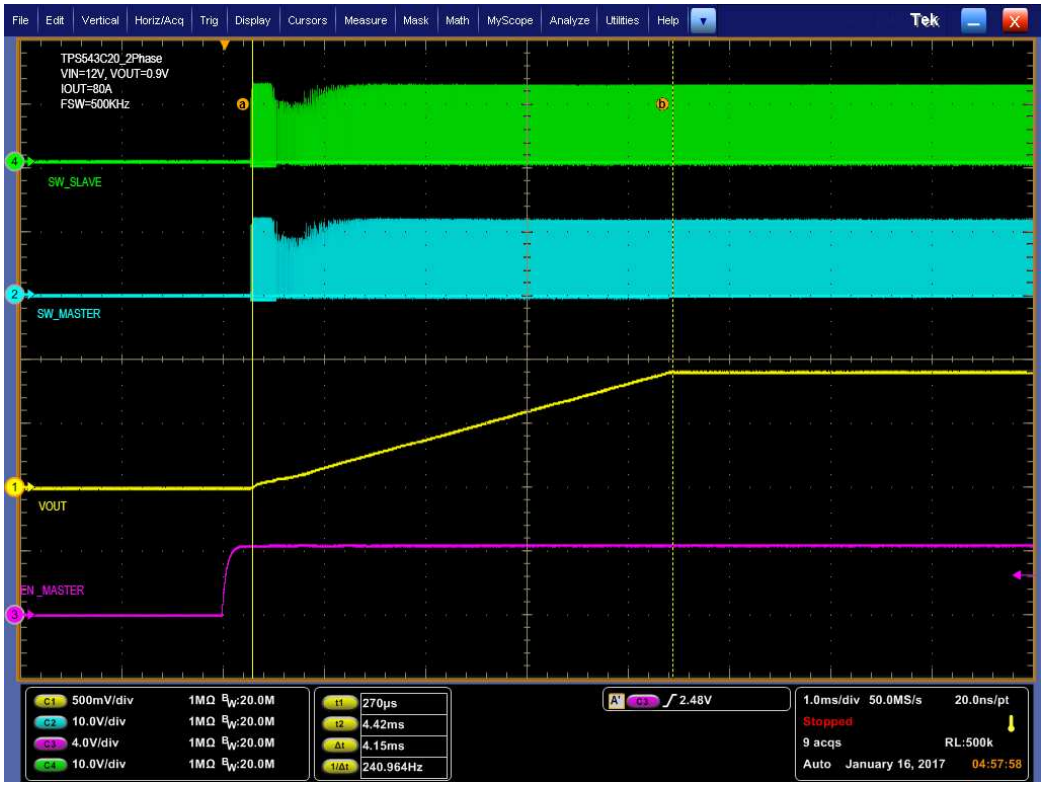

Figure 12. Start up from Enable, 0.9-V Output at 12 V_{IN}, 80-A Output

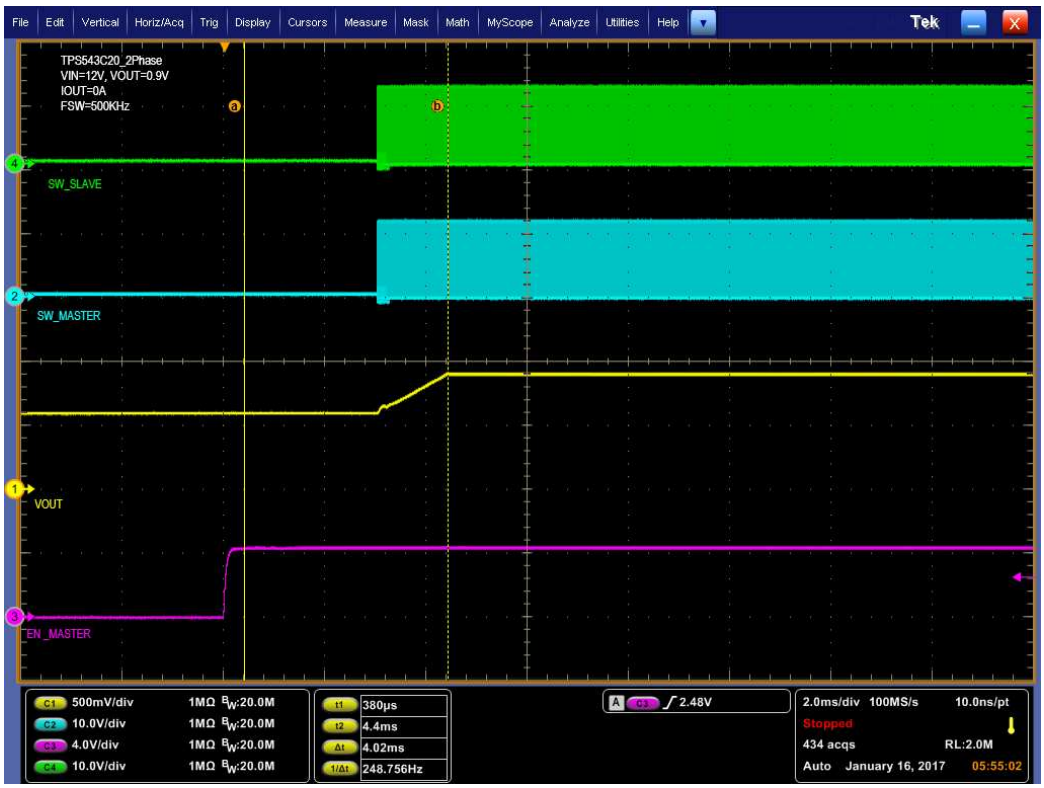

Figure 13. 0.6-V Pre-Bias Start Up From Enable, 0.9-V Output at 12 V_{IN}, 0-A Output

Copyright © 2017, Texas Instruments Incorporated

9.7 Control On and Off



Figure 14. Output Voltage Start-up and Shutdown, 0.9-V Output at 12 V_{IN}, 5-A Output



Figure 15. Master-Slave 180° Synchronization

Copyright © 2017, Texas Instruments Incorporated

9.8 Thermal Image

Figure 16 is a thermal image of the device.

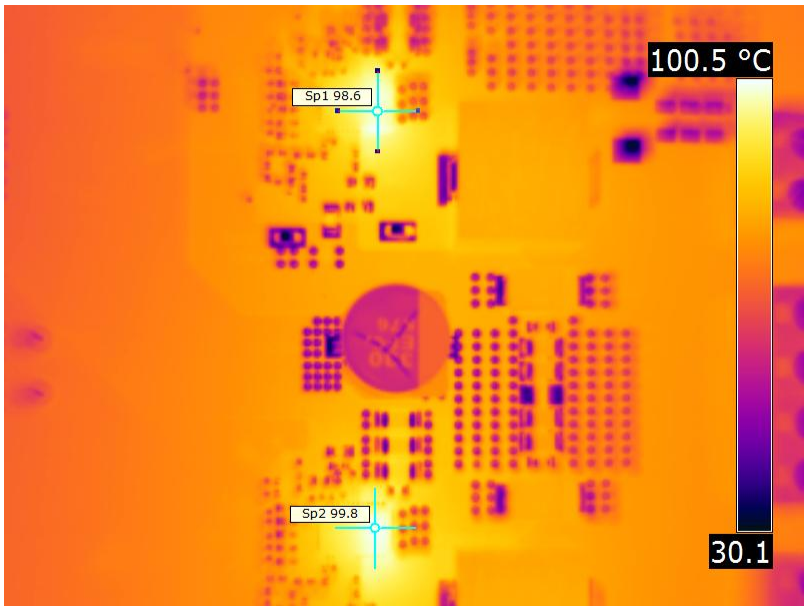

Figure 16. Thermal Image at 0.9-V Output at 12 V_{IN}, 80-A Output, at 25°C Ambient

Copyright © 2017, Texas Instruments Incorporated

10 EVM Assembly Drawing and PCB Layout

Figure 17 through Figure 24 show the design of the PWR-869EVM printed-circuit board (PCB). The PWR-869EVM has a 2-oz. copper finish for all layers.

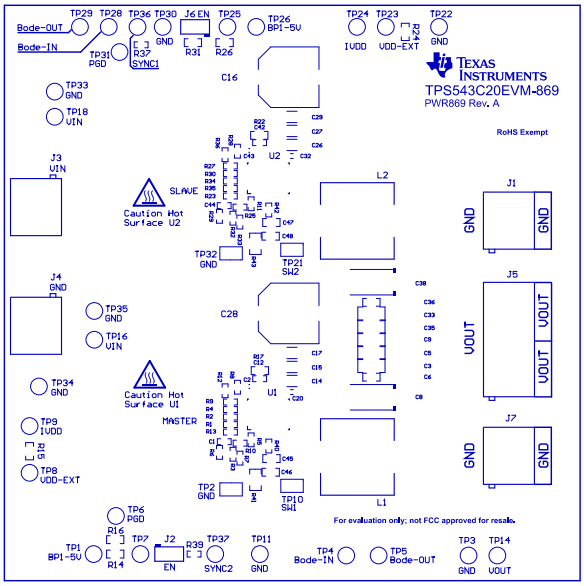

Figure 17. TPS543C20EVM-869 Top Layer Assembly Drawing (Top View)

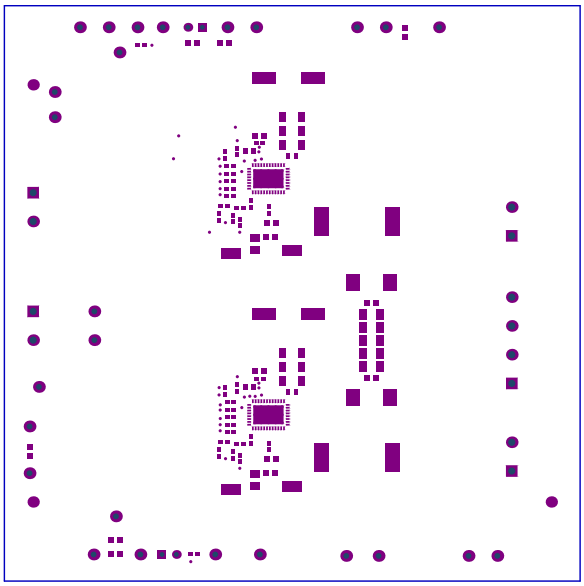

Figure 18. TPS543C20EVM-869 Top Solder Mask (Top View)

Copyright © 2017, Texas Instruments Incorporated

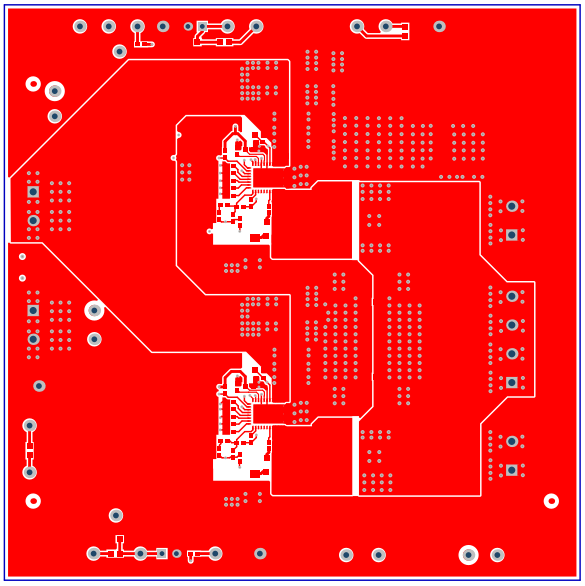

Figure 19. TPS543C20EVM-869 Top Layer (Top View)

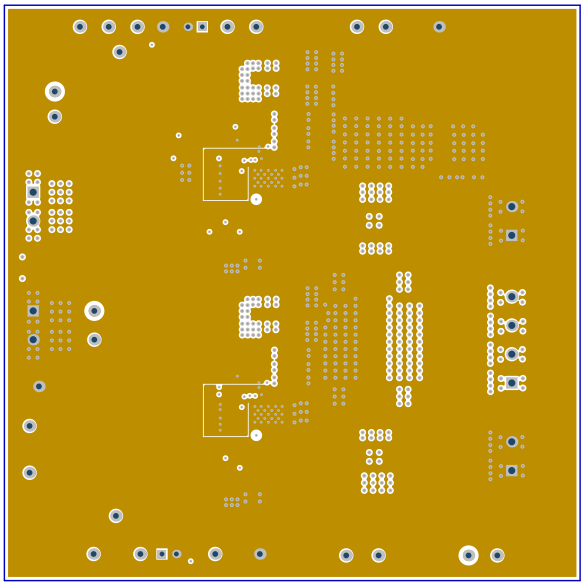

Figure 20. TPS543C20EVM-869 Inner Layer 1 (Top View)

Copyright © 2017, Texas Instruments Incorporated

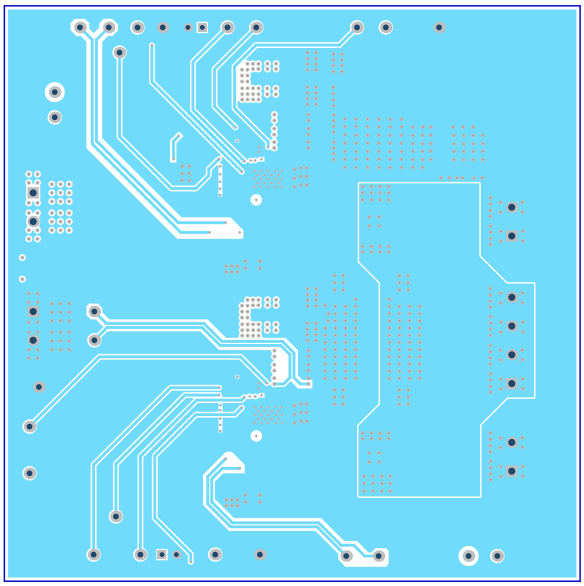

Figure 21. TPS543C20EVM-869 Inner Layer 2 (Top View)

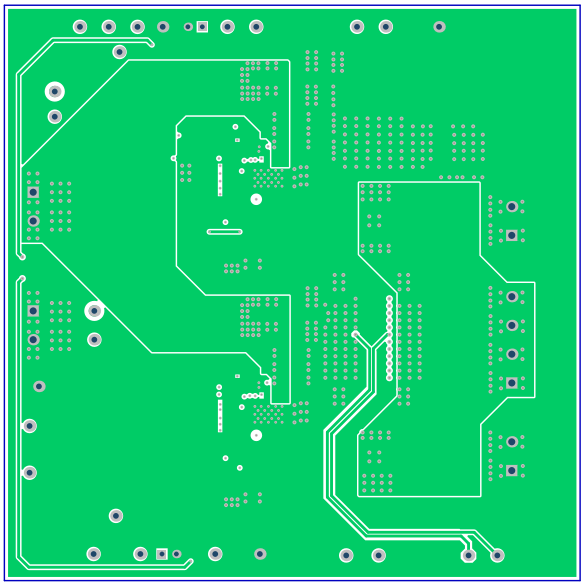

Figure 22. TPS543C20EVM-869 Inner Layer 3 (Top View)

Copyright © 2017, Texas Instruments Incorporated

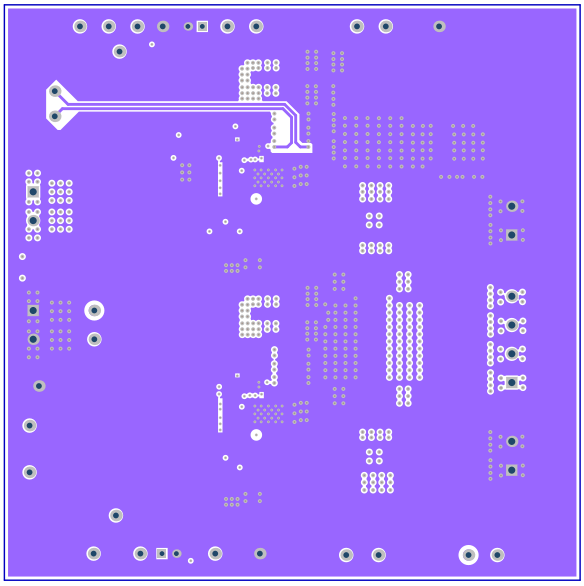

Figure 23. TPS543C20EVM-869 Inner Layer 4 (Top View)

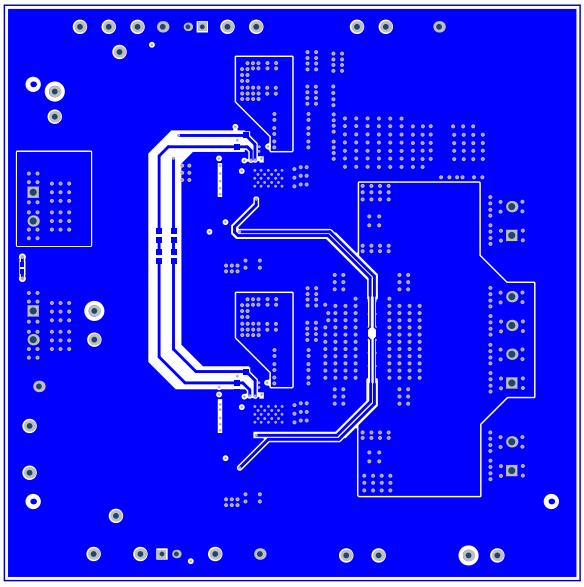

Figure 24. TPS543C20EVM-869 Bottom Layer (Top View)

Copyright © 2017, Texas Instruments Incorporated

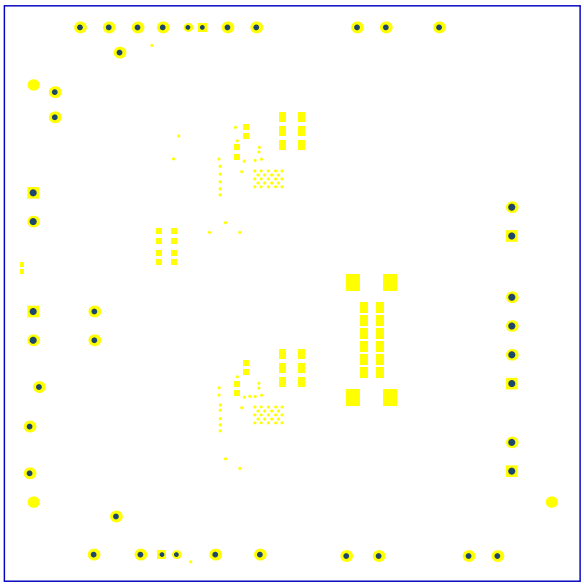

Figure 25. TPS543C20EVM-869 Bottom Solder Mask (Top View)

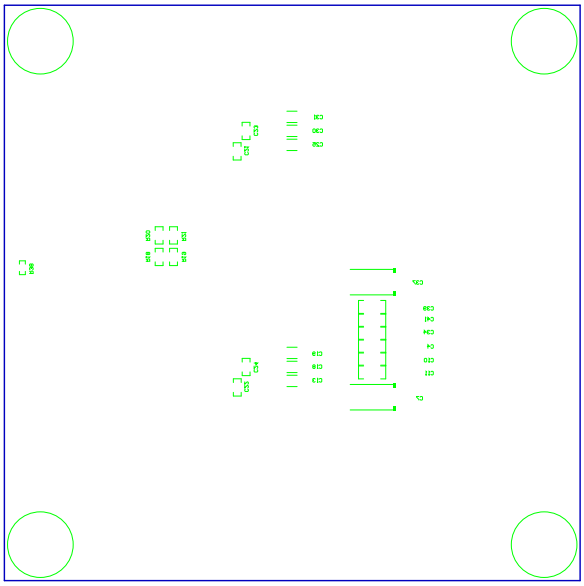

Figure 26. TPS543C20EVM-869 Bottom Overlay Layer (Top View)

Copyright © 2017, Texas Instruments Incorporated

11 List of Materials

The EVM components list, according to the schematic, is shown in Table 5.

Table 5. TPS543C20EVM-869 List of Materials

Designator	Qty	Value	Description	Package Reference	Part Number	Manufacturer
!PCB	1		Printed Circuit Board		PWR869	Any
C2, C43	2	4.7uF	CAP, CERM, 4.7 µF, 16 V, +/- 10%, X5R, 0603	0603	GRM188R61C475KAAJ	Murata
C3, C5, C9, C33, C35	5	100uF	CAP, CERM, 100 µF, 6.3 V, +/- 20%, X5R, 1206	1206	GRM31CR60J107ME39L	Murata
C6, C36	2	0.1uF	CAP, CERM, 0.1 µF, 10 V, +/- 10%, X7R, 0603	0603	C0603X104K8RACTU	Kemet
C7, C8, C37, C38	4	330uF	CAP, Aluminum Polymer, 330 µF, 2 V, +/- 20%, 3 mohm, 7.3x1.8x4.3mm SMD	7.3x1.8x4.3mm	EEFGX0D331R	Panasonic
C12, C42	2	1uF	CAP, CERM, 1 µF, 25 V, +/- 10%, X5R, 0402	0402	GRM155R61E105KA12D	Murata
C13, C14, C15, C17, C18, C19, C25, C26, C27, C29, C30, C31	12	22uF	CAP, CERM, 22 µF, 25 V, +/- 20%, X5R, 1206_190	1206_190	C3216X5R1E226M160AB	TDK
C16, C28	2	330uF	CAP, AL, 330 µF, 25 V, +/- 20%, 0.15 ohm, SMD	SMT Radial G	EEE-FC1E331P	Panasonic
C20, C32	2	0.1uF	CAP, CERM, 0.1 µF, 25 V, +/- 10%, X7R, 0603	0603	GRM188R71E104KA01D	Murata
C45, C47	2	0.1uF	CAP, CERM, 0.1 µF, 50 V, +/- 10%, X7R, 0603	0603	06035C104KAT2A	AVX
C46, C48	2	1000pF	CAP, CERM, 1000 pF, 50 V, +/- 10%, C0G/NP0, 0603	0603	06035A102KAT2A	AVX
H9, H10, H11, H12	4		Bumpon, Hemisphere, 0.44 X 0.20, Clear	Transparent Bumpon	SJ-5303 (CLEAR)	3M
J1, J3, J4, J7	4		Terminal Block, 5.08 mm, 2x1, Brass, TH	2x1 5.08 mm Terminal Block	ED120/2DS	On-Shore Technology
J2, J6	2		Header, 100mil, 2x1, TH	Header, 2x1, 100mil, TH	800-10-002-10-001000	Mill-Max
J5	1		Terminal Block, 5.08 mm, 4x1, Brass, TH	4x1 5.08 mm Terminal Block	ED120/4DS	On-Shore Technology
L1, L2	2	470nH	Inductor, Shielded Drum Core, Ferrite, 470 nH, 40.5 A, 0.000165 ohm, SMD	12.5x13mm	744309047	Wurth Elektronik
R1	1	23.7k	RES, 23.7 k, 1%, 0.1 W, AEC-Q200 Grade 0, 0402	0402	ERJ-2RKF2372X	Panasonic
R2	1	40.2k	RES, 40.2 k, 1%, 0.063 W, 0402	0402	CRCW040240K2FKED	Vishay-Dale
R3, R5, R7, R11, R33, R37, R38, R39, R40, R42	10	0	RES, 0, 5%, 0.063 W, 0402	0402	CRCW04020000Z0ED	Vishay-Dale
R8, R28	2	45.3k	RES, 45.3 k, 1%, 0.063 W, 0402	0402	CRCW040245K3FKED	Vishay-Dale
R9, R27, R35	3	51.1k	RES, 51.1 k, 1%, 0.063 W, 0402	0402	CRCW040251K1FKED	Vishay-Dale
R12, R36	2	100k	RES, 100 k, 5%, 0.063 W, 0402	0402	CRCW0402100KJNED	Vishay-Dale
R13, R23	2	187k	RES, 187 k, 1%, 0.063 W, 0402	0402	CRCW0402187KFKED	Vishay-Dale
R15, R24	2	1.00	RES, 1.00, 1%, 0.1 W, 0603	0603	CRCW06031R00FKEA	Vishay-Dale
R17, R19, R21, R22	4	0	RES, 0, 5%, 0.1 W, 0603	0603	CRCW06030000Z0EA	Vishay-Dale
R18, R20	2	0	RES, 0, 5%, 0.1 W, 0603	0603	ERJ-3GEY0R00V	Panasonic
R41, R43	2	3.0	RES, 3.0 ohm, 5%, 0.125W, 0805	0805	RC0805JR-073RL	Yageo America

Copyright © 2017, Texas Instruments Incorporated

Table 5. TPS543C20EVM-869 List of Materials (continued)

Designator	Qty	Value	Description	Package Reference	Part Number	Manufacturer
TP1, TP4, TP5, TP6, TP7, TP8, TP9, TP14, TP16, TP18, TP23, TP24, TP25, TP26, TP28, TP29, TP31, TP36, TP37	19	Red	Test Point, Miniature, Red, TH	Red Miniature Testpoint	5000	Keystone
TP2, TP10, TP21, TP32	4	SMT	Test Point, Miniature, SMT	Testpoint_Keystone_Miniature	5015	Keystone
TP3, TP11, TP22, TP30, TP33, TP34, TP35	7	Black	Test Point, Miniature, Black, TH	Black Miniature Testpoint	5001	Keystone
U1, U2	2		40A FIXED FREQUENCY NON-COMPENSATION STACKABLE SYNCHRONOUS BUCK CONVERTER, RVF0040A	RVF0040A	TPS543C20RVFT	Texas Instruments
C1, C44	0	22pF	CAP, CERM, 22 pF, 50 V, +/- 5%, C0G/NP0, 0402	0402	C1005C0G1H220J050BA	TDK
C4, C10, C11, C34, C39, C41	0	100uF	CAP, CERM, 100 µF, 6.3 V, +/- 20%, X5R, 1206	1206	GRM31CR60J107ME39L	Murata
C21, C22, C23, C24	0	33pF	CAP, CERM, 33 pF, 100 V, +/- 5%, C0G/NP0, 0603	0603	06031A330JAT2A	AVX
FID1, FID2, FID3, FID4, FID5, FID6	0		Fiducial mark. There is nothing to buy or mount.	Fiducial	N/A	N/A
R4	0	8.66k	RES, 8.66 k, 1%, 0.063 W, 0402	0402	CRCW04028K66FKED	Vishay-Dale
R6, R10, R25, R29, R30	0	0	RES, 0, 5%, 0.063 W, 0402	0402	ERJ-2GE0R00X	Panasonic
R14, R16, R26, R31	0	0	RES, 0, 5%, 0.1 W, 0603	0603	CRCW06030000Z0EA	Vishay-Dale
R32	0	0	RES, 0, 5%, 0.063 W, 0402	0402	CRCW04020000Z0ED	Vishay-Dale
R34	0	40.2k	RES, 40.2 k, 1%, 0.063 W, 0402	0402	CRCW040240K2FKED	Vishay-Dale

Copyright © 2017, Texas Instruments Incorporated

STANDARD TERMS FOR EVALUATION MODULES

1. *Delivery:* TI delivers TI evaluation boards, kits, or modules, including any accompanying demonstration software, components, and/or documentation which may be provided together or separately (collectively, an “EVM” or “EVMs”) to the User (“User”) in accordance with the terms set forth herein. User's acceptance of the EVM is expressly subject to the following terms.

   1.1 EVMs are intended solely for product or software developers for use in a research and development setting to facilitate feasibility evaluation, experimentation, or scientific analysis of TI semiconductors products. EVMs have no direct function and are not finished products. EVMs shall not be directly or indirectly assembled as a part or subassembly in any finished product. For clarification, any software or software tools provided with the EVM (“Software”) shall not be subject to the terms and conditions set forth herein but rather shall be subject to the applicable terms that accompany such Software

   1.2 EVMs are not intended for consumer or household use. EVMs may not be sold, sublicensed, leased, rented, loaned, assigned, or otherwise distributed for commercial purposes by Users, in whole or in part, or used in any finished product or production system.

2 *Limited Warranty and Related Remedies/Disclaimers*:

   2.1 These terms do not apply to Software. The warranty, if any, for Software is covered in the applicable Software License Agreement.

   2.2 TI warrants that the TI EVM will conform to TI's published specifications for ninety (90) days after the date TI delivers such EVM to User. Notwithstanding the foregoing, TI shall not be liable for a nonconforming EVM if (a) the nonconformity was caused by neglect, misuse or mistreatment by an entity other than TI, including improper installation or testing, or for any EVMs that have been altered or modified in any way by an entity other than TI, (b) the nonconformity resulted from User's design, specifications or instructions for such EVMs or improper system design, or (c) User has not paid on time. Testing and other quality control techniques are used to the extent TI deems necessary. TI does not test all parameters of each EVM. User's claims against TI under this Section 2 are void if User fails to notify TI of any apparent defects in the EVMs within ten (10) business days after delivery, or of any hidden defects with ten (10) business days after the defect has been detected.

   2.3 TI's sole liability shall be at its option to repair or replace EVMs that fail to conform to the warranty set forth above, or credit User's account for such EVM. TI's liability under this warranty shall be limited to EVMs that are returned during the warranty period to the address designated by TI and that are determined by TI not to conform to such warranty. If TI elects to repair or replace such EVM, TI shall have a reasonable time to repair such EVM or provide replacements. Repaired EVMs shall be warranted for the remainder of the original warranty period. Replaced EVMs shall be warranted for a new full ninety (90) day warranty period.

3 *Regulatory Notices:*

   3.1 *United States*

      3.1.1 *Notice applicable to EVMs not FCC-Approved:*

      FCC NOTICE: This kit is designed to allow product developers to evaluate electronic components, circuitry, or software associated with the kit to determine whether to incorporate such items in a finished product and software developers to write software applications for use with the end product. This kit is not a finished product and when assembled may not be resold or otherwise marketed unless all required FCC equipment authorizations are first obtained. Operation is subject to the condition that this product not cause harmful interference to licensed radio stations and that this product accept harmful interference. Unless the assembled kit is designed to operate under part 15, part 18 or part 95 of this chapter, the operator of the kit must operate under the authority of an FCC license holder or must secure an experimental authorization under part 5 of this chapter.

      3.1.2 *For EVMs annotated as FCC – FEDERAL COMMUNICATIONS COMMISSION Part 15 Compliant:*

      CAUTION

      This device complies with part 15 of the FCC Rules. Operation is subject to the following two conditions: (1) This device may not cause harmful interference, and (2) this device must accept any interference received, including interference that may cause undesired operation.

      Changes or modifications not expressly approved by the party responsible for compliance could void the user's authority to operate the equipment.

      FCC Interference Statement for Class A EVM devices

      NOTE: This equipment has been tested and found to comply with the limits for a Class A digital device, pursuant to part 15 of the FCC Rules. These limits are designed to provide reasonable protection against harmful interference when the equipment is operated in a commercial environment. This equipment generates, uses, and can radiate radio frequency energy and, if not installed and used in accordance with the instruction manual, may cause harmful interference to radio communications. Operation of this equipment in a residential area is likely to cause harmful interference in which case the user will be required to correct the interference at his own expense.

FCC Interference Statement for Class B EVM devices

NOTE: This equipment has been tested and found to comply with the limits for a Class B digital device, pursuant to part 15 of the FCC Rules. These limits are designed to provide reasonable protection against harmful interference in a residential installation. This equipment generates, uses and can radiate radio frequency energy and, if not installed and used in accordance with the instructions, may cause harmful interference to radio communications. However, there is no guarantee that interference will not occur in a particular installation. If this equipment does cause harmful interference to radio or television reception, which can be determined by turning the equipment off and on, the user is encouraged to try to correct the interference by one or more of the following measures:

- *Reorient or relocate the receiving antenna.*
- *Increase the separation between the equipment and receiver.*
- *Connect the equipment into an outlet on a circuit different from that to which the receiver is connected.*
- *Consult the dealer or an experienced radio/TV technician for help.*

3.2 *Canada*

3.2.1 *For EVMs issued with an Industry Canada Certificate of Conformance to RSS-210 or RSS-247*

Concerning EVMs Including Radio Transmitters:

This device complies with Industry Canada license-exempt RSSs. Operation is subject to the following two conditions:

(1) this device may not cause interference, and (2) this device must accept any interference, including interference that may cause undesired operation of the device.

Concernant les EVMs avec appareils radio:

Le présent appareil est conforme aux CNR d'Industrie Canada applicables aux appareils radio exempts de licence. L'exploitation est autorisée aux deux conditions suivantes: (1) l'appareil ne doit pas produire de brouillage, et (2) l'utilisateur de l'appareil doit accepter tout brouillage radioélectrique subi, même si le brouillage est susceptible d'en compromettre le fonctionnement.

Concerning EVMs Including Detachable Antennas:

Under Industry Canada regulations, this radio transmitter may only operate using an antenna of a type and maximum (or lesser) gain approved for the transmitter by Industry Canada. To reduce potential radio interference to other users, the antenna type and its gain should be so chosen that the equivalent isotropically radiated power (e.i.r.p.) is not more than that necessary for successful communication. This radio transmitter has been approved by Industry Canada to operate with the antenna types listed in the user guide with the maximum permissible gain and required antenna impedance for each antenna type indicated. Antenna types not included in this list, having a gain greater than the maximum gain indicated for that type, are strictly prohibited for use with this device.

Concernant les EVMs avec antennes détachables

Conformément à la réglementation d'Industrie Canada, le présent émetteur radio peut fonctionner avec une antenne d'un type et d'un gain maximal (ou inférieur) approuvé pour l'émetteur par Industrie Canada. Dans le but de réduire les risques de brouillage radioélectrique à l'intention des autres utilisateurs, il faut choisir le type d'antenne et son gain de sorte que la puissance isotrope rayonnée équivalente (p.i.r.e.) ne dépasse pas l'intensité nécessaire à l'établissement d'une communication satisfaisante. Le présent émetteur radio a été approuvé par Industrie Canada pour fonctionner avec les types d'antenne énumérés dans le manuel d'usage et ayant un gain admissible maximal et l'impédance requise pour chaque type d'antenne. Les types d'antenne non inclus dans cette liste, ou dont le gain est supérieur au gain maximal indiqué, sont strictement interdits pour l'exploitation de l'émetteur

3.3 *Japan*

3.3.1 *Notice for EVMs delivered in Japan:* Please see http://www.tij.co.jp/lsds/ti_ja/general/eStore/notice_01.page 日本国内に輸入される評価用キット、ボードについては、次のところをご覧ください。
http://www.tij.co.jp/lsds/ti_ja/general/eStore/notice_01.page

3.3.2 *Notice for Users of EVMs Considered "Radio Frequency Products" in Japan:* EVMs entering Japan may not be certified by TI as conforming to Technical Regulations of Radio Law of Japan.

If User uses EVMs in Japan, not certified to Technical Regulations of Radio Law of Japan, User is required to follow the instructions set forth by Radio Law of Japan, which includes, but is not limited to, the instructions below with respect to EVMs (which for the avoidance of doubt are stated strictly for convenience and should be verified by User):

1. Use EVMs in a shielded room or any other test facility as defined in the notification #173 issued by Ministry of Internal Affairs and Communications on March 28, 2006, based on Sub-section 1.1 of Article 6 of the Ministry's Rule for Enforcement of Radio Law of Japan,
2. Use EVMs only after User obtains the license of Test Radio Station as provided in Radio Law of Japan with respect to EVMs, or
3. Use of EVMs only after User obtains the Technical Regulations Conformity Certification as provided in Radio Law of Japan with respect to EVMs. Also, do not transfer EVMs, unless User gives the same notice above to the transferee. Please note that if User does not follow the instructions above, User will be subject to penalties of Radio Law of Japan.

【無線電波を送信する製品の開発キットをお使いになる際の注意事項】 開発キットの中には技術基準適合証明を受けていないものがあります。 技術適合証明を受けていないもののご使用に際しては、電波法遵守のため、以下のいずれかの措置を取っていただく必要がありますのでご注意ください。

1. 電波法施行規則第6条第1項第1号に基づく平成18年3月28日総務省告示第173号で定められた電波暗室等の試験設備でご使用いただく。
2. 実験局の免許を取得後ご使用いただく。
3. 技術基準適合証明を取得後ご使用いただく。

なお、本製品は、上記の「ご使用にあたっての注意」を譲渡先、移転先に通知しない限り、譲渡、移転できないものとします。

上記を遵守頂けない場合は、電波法の罰則が適用される可能性があることをご留意ください。 日本テキサス・インスツルメンツ株式会社

東京都新宿区西新宿６丁目２４番１号

西新宿三井ビル

3.3.3 *Notice for EVMs for Power Line Communication:* Please see http://www.tij.co.jp/lsds/ti_ja/general/eStore/notice_02.page

電力線搬送波通信についての開発キットをお使いになる際の注意事項については、次のところをご覧ください。http://www.tij.co.jp/lsds/ti_ja/general/eStore/notice_02.page

3.4 *European Union*

3.4.1 *For EVMs subject to EU Directive 2014/30/EU (Electromagnetic Compatibility Directive)*:

This is a class A product intended for use in environments other than domestic environments that are connected to a low-voltage power-supply network that supplies buildings used for domestic purposes. In a domestic environment this product may cause radio interference in which case the user may be required to take adequate measures.

4 *EVM Use Restrictions and Warnings:*

4.1 EVMS ARE NOT FOR USE IN FUNCTIONAL SAFETY AND/OR SAFETY CRITICAL EVALUATIONS, INCLUDING BUT NOT LIMITED TO EVALUATIONS OF LIFE SUPPORT APPLICATIONS.

4.2 User must read and apply the user guide and other available documentation provided by TI regarding the EVM prior to handling or using the EVM, including without limitation any warning or restriction notices. The notices contain important safety information related to, for example, temperatures and voltages.

4.3 *Safety-Related Warnings and Restrictions:*

4.3.1 User shall operate the EVM within TI's recommended specifications and environmental considerations stated in the user guide, other available documentation provided by TI, and any other applicable requirements and employ reasonable and customary safeguards. Exceeding the specified performance ratings and specifications (including but not limited to input and output voltage, current, power, and environmental ranges) for the EVM may cause personal injury or death, or property damage. If there are questions concerning performance ratings and specifications, User should contact a TI field representative prior to connecting interface electronics including input power and intended loads. Any loads applied outside of the specified output range may also result in unintended and/or inaccurate operation and/or possible permanent damage to the EVM and/or interface electronics. Please consult the EVM user guide prior to connecting any load to the EVM output. If there is uncertainty as to the load specification, please contact a TI field representative. During normal operation, even with the inputs and outputs kept within the specified allowable ranges, some circuit components may have elevated case temperatures. These components include but are not limited to linear regulators, switching transistors, pass transistors, current sense resistors, and heat sinks, which can be identified using the information in the associated documentation. When working with the EVM, please be aware that the EVM may become very warm.

4.3.2 EVMs are intended solely for use by technically qualified, professional electronics experts who are familiar with the dangers and application risks associated with handling electrical mechanical components, systems, and subsystems. User assumes all responsibility and liability for proper and safe handling and use of the EVM by User or its employees, affiliates, contractors or designees. User assumes all responsibility and liability to ensure that any interfaces (electronic and/or mechanical) between the EVM and any human body are designed with suitable isolation and means to safely limit accessible leakage currents to minimize the risk of electrical shock hazard. User assumes all responsibility and liability for any improper or unsafe handling or use of the EVM by User or its employees, affiliates, contractors or designees.

4.4 User assumes all responsibility and liability to determine whether the EVM is subject to any applicable international, federal, state, or local laws and regulations related to User's handling and use of the EVM and, if applicable, User assumes all responsibility and liability for compliance in all respects with such laws and regulations. User assumes all responsibility and liability for proper disposal and recycling of the EVM consistent with all applicable international, federal, state, and local requirements.

5. *Accuracy of Information:* To the extent TI provides information on the availability and function of EVMs, TI attempts to be as accurate as possible. However, TI does not warrant the accuracy of EVM descriptions, EVM availability or other information on its websites as accurate, complete, reliable, current, or error-free.

6. *Disclaimers:*

   6.1 EXCEPT AS SET FORTH ABOVE, EVMS AND ANY MATERIALS PROVIDED WITH THE EVM (INCLUDING, BUT NOT LIMITED TO, REFERENCE DESIGNS AND THE DESIGN OF THE EVM ITSELF) ARE PROVIDED "AS IS" AND "WITH ALL FAULTS." TI DISCLAIMS ALL OTHER WARRANTIES, EXPRESS OR IMPLIED, REGARDING SUCH ITEMS, INCLUDING BUT NOT LIMITED TO ANY EPIDEMIC FAILURE WARRANTY OR IMPLIED WARRANTIES OF MERCHANTABILITY OR FITNESS FOR A PARTICULAR PURPOSE OR NON-INFRINGEMENT OF ANY THIRD PARTY PATENTS, COPYRIGHTS, TRADE SECRETS OR OTHER INTELLECTUAL PROPERTY RIGHTS.

   6.2 EXCEPT FOR THE LIMITED RIGHT TO USE THE EVM SET FORTH HEREIN, NOTHING IN THESE TERMS SHALL BE CONSTRUED AS GRANTING OR CONFERRING ANY RIGHTS BY LICENSE, PATENT, OR ANY OTHER INDUSTRIAL OR INTELLECTUAL PROPERTY RIGHT OF TI, ITS SUPPLIERS/LICENSORS OR ANY OTHER THIRD PARTY, TO USE THE EVM IN ANY FINISHED END-USER OR READY-TO-USE FINAL PRODUCT, OR FOR ANY INVENTION, DISCOVERY OR IMPROVEMENT, REGARDLESS OF WHEN MADE, CONCEIVED OR ACQUIRED.

7. *USER'S INDEMNITY OBLIGATIONS AND REPRESENTATIONS.* USER WILL DEFEND, INDEMNIFY AND HOLD TI, ITS LICENSORS AND THEIR REPRESENTATIVES HARMLESS FROM AND AGAINST ANY AND ALL CLAIMS, DAMAGES, LOSSES, EXPENSES, COSTS AND LIABILITIES (COLLECTIVELY, "CLAIMS") ARISING OUT OF OR IN CONNECTION WITH ANY HANDLING OR USE OF THE EVM THAT IS NOT IN ACCORDANCE WITH THESE TERMS. THIS OBLIGATION SHALL APPLY WHETHER CLAIMS ARISE UNDER STATUTE, REGULATION, OR THE LAW OF TORT, CONTRACT OR ANY OTHER LEGAL THEORY, AND EVEN IF THE EVM FAILS TO PERFORM AS DESCRIBED OR EXPECTED.

8. *Limitations on Damages and Liability:*

   8.1 *General Limitations*. IN NO EVENT SHALL TI BE LIABLE FOR ANY SPECIAL, COLLATERAL, INDIRECT, PUNITIVE, INCIDENTAL, CONSEQUENTIAL, OR EXEMPLARY DAMAGES IN CONNECTION WITH OR ARISING OUT OF THESE TERMS OR THE USE OF THE EVMS , REGARDLESS OF WHETHER TI HAS BEEN ADVISED OF THE POSSIBILITY OF SUCH DAMAGES. EXCLUDED DAMAGES INCLUDE, BUT ARE NOT LIMITED TO, COST OF REMOVAL OR REINSTALLATION, ANCILLARY COSTS TO THE PROCUREMENT OF SUBSTITUTE GOODS OR SERVICES, RETESTING, OUTSIDE COMPUTER TIME, LABOR COSTS, LOSS OF GOODWILL, LOSS OF PROFITS, LOSS OF SAVINGS, LOSS OF USE, LOSS OF DATA, OR BUSINESS INTERRUPTION. NO CLAIM, SUIT OR ACTION SHALL BE BROUGHT AGAINST TI MORE THAN TWELVE (12) MONTHS AFTER THE EVENT THAT GAVE RISE TO THE CAUSE OF ACTION HAS OCCURRED.

   8.2 *Specific Limitations.* IN NO EVENT SHALL TI'S AGGREGATE LIABILITY FROM ANY USE OF AN EVM PROVIDED HEREUNDER, INCLUDING FROM ANY WARRANTY, INDEMITY OR OTHER OBLIGATION ARISING OUT OF OR IN CONNECTION WITH THESE TERMS, , EXCEED THE TOTAL AMOUNT PAID TO TI BY USER FOR THE PARTICULAR EVM(S) AT ISSUE DURING THE PRIOR TWELVE (12) MONTHS WITH RESPECT TO WHICH LOSSES OR DAMAGES ARE CLAIMED. THE EXISTENCE OF MORE THAN ONE CLAIM SHALL NOT ENLARGE OR EXTEND THIS LIMIT.

9. *Return Policy.* Except as otherwise provided, TI does not offer any refunds, returns, or exchanges. Furthermore, no return of EVM(s) will be accepted if the package has been opened and no return of the EVM(s) will be accepted if they are damaged or otherwise not in a resalable condition. If User feels it has been incorrectly charged for the EVM(s) it ordered or that delivery violates the applicable order, User should contact TI. All refunds will be made in full within thirty (30) working days from the return of the components(s), excluding any postage or packaging costs.

10. *Governing Law:* These terms and conditions shall be governed by and interpreted in accordance with the laws of the State of Texas, without reference to conflict-of-laws principles. User agrees that non-exclusive jurisdiction for any dispute arising out of or relating to these terms and conditions lies within courts located in the State of Texas and consents to venue in Dallas County, Texas. Notwithstanding the foregoing, any judgment may be enforced in any United States or foreign court, and TI may seek injunctive relief in any United States or foreign court.

Mailing Address: Texas Instruments, Post Office Box 655303, Dallas, Texas 75265
Copyright © 2017, Texas Instruments Incorporated

IMPORTANT NOTICE FOR TI DESIGN INFORMATION AND RESOURCES

Texas Instruments Incorporated ('TI") technical, application or other design advice, services or information, including, but not limited to, reference designs and materials relating to evaluation modules, (collectively, "TI Resources") are intended to assist designers who are developing applications that incorporate TI products; by downloading, accessing or using any particular TI Resource in any way, you (individually or, if you are acting on behalf of a company, your company) agree to use it solely for this purpose and subject to the terms of this Notice.

TI's provision of TI Resources does not expand or otherwise alter TI's applicable published warranties or warranty disclaimers for TI products, and no additional obligations or liabilities arise from TI providing such TI Resources. TI reserves the right to make corrections, enhancements, improvements and other changes to its TI Resources.

You understand and agree that you remain responsible for using your independent analysis, evaluation and judgment in designing your applications and that you have full and exclusive responsibility to assure the safety of your applications and compliance of your applications (and of all TI products used in or for your applications) with all applicable regulations, laws and other applicable requirements. You represent that, with respect to your applications, you have all the necessary expertise to create and implement safeguards that (1) anticipate dangerous consequences of failures, (2) monitor failures and their consequences, and (3) lessen the likelihood of failures that might cause harm and take appropriate actions. You agree that prior to using or distributing any applications that include TI products, you will thoroughly test such applications and the functionality of such TI products as used in such applications. TI has not conducted any testing other than that specifically described in the published documentation for a particular TI Resource.

You are authorized to use, copy and modify any individual TI Resource only in connection with the development of applications that include the TI product(s) identified in such TI Resource. NO OTHER LICENSE, EXPRESS OR IMPLIED, BY ESTOPPEL OR OTHERWISE TO ANY OTHER TI INTELLECTUAL PROPERTY RIGHT, AND NO LICENSE TO ANY TECHNOLOGY OR INTELLECTUAL PROPERTY RIGHT OF TI OR ANY THIRD PARTY IS GRANTED HEREIN, including but not limited to any patent right, copyright, mask work right, or other intellectual property right relating to any combination, machine, or process in which TI products or services are used. Information regarding or referencing third-party products or services does not constitute a license to use such products or services, or a warranty or endorsement thereof. Use of TI Resources may require a license from a third party under the patents or other intellectual property of the third party, or a license from TI under the patents or other intellectual property of TI.

TI RESOURCES ARE PROVIDED "AS IS" AND WITH ALL FAULTS. TI DISCLAIMS ALL OTHER WARRANTIES OR REPRESENTATIONS, EXPRESS OR IMPLIED, REGARDING TI RESOURCES OR USE THEREOF, INCLUDING BUT NOT LIMITED TO ACCURACY OR COMPLETENESS, TITLE, ANY EPIDEMIC FAILURE WARRANTY AND ANY IMPLIED WARRANTIES OF MERCHANTABILITY, FITNESS FOR A PARTICULAR PURPOSE, AND NON-INFRINGEMENT OF ANY THIRD PARTY INTELLECTUAL PROPERTY RIGHTS.

TI SHALL NOT BE LIABLE FOR AND SHALL NOT DEFEND OR INDEMNIFY YOU AGAINST ANY CLAIM, INCLUDING BUT NOT LIMITED TO ANY INFRINGEMENT CLAIM THAT RELATES TO OR IS BASED ON ANY COMBINATION OF PRODUCTS EVEN IF DESCRIBED IN TI RESOURCES OR OTHERWISE. IN NO EVENT SHALL TI BE LIABLE FOR ANY ACTUAL, DIRECT, SPECIAL, COLLATERAL, INDIRECT, PUNITIVE, INCIDENTAL, CONSEQUENTIAL OR EXEMPLARY DAMAGES IN CONNECTION WITH OR ARISING OUT OF TI RESOURCES OR USE THEREOF, AND REGARDLESS OF WHETHER TI HAS BEEN ADVISED OF THE POSSIBILITY OF SUCH DAMAGES.

You agree to fully indemnify TI and its representatives against any damages, costs, losses, and/or liabilities arising out of your non-compliance with the terms and provisions of this Notice.

This Notice applies to TI Resources. Additional terms apply to the use and purchase of certain types of materials, TI products and services. These include; without limitation, TI's standard terms for semiconductor products http://www.ti.com/sc/docs/stdterms.htm), evaluation modules, and samples (http://www.ti.com/sc/docs/sampterms.htm).

Mailing Address: Texas Instruments, Post Office Box 655303, Dallas, Texas 75265
Copyright © 2017, Texas Instruments Incorporated