Using the TPS53647: PWR710-EVM, 4-Phase, D-CAP+ Step-Down, DC-DC Analog with PMBus Interface

The PWR710-EVM evaluation module (EVM) uses the TPS53647 controller. The controller is 4-phase, D-CAP+™ synchronous buck driverless controller with PMBus™ interface. The device operates using a voltage supply between 4.5 V and 17 V. The controller allows programming and monitoring via the PMBus interface. This PWR710-EVM uses the CSD95372B, *Synchronous Buck NexFET™ Smart Power Stage* (SLPS499) device as the power stage.

Contents

1 Description 1
1.1 Typical Applications 1
1.2 Features 2
2 Electrical Performance Specifications 2
3 Schematic 3
4 Test Setup 8
4.1 Test and Configuration Software 8
4.2 Test Equipment 8
4.3 Recommended Test Setup 9
4.4 USB Interface Adapter and Cable 10
4.5 List of Test Points and Connectors 11
5 EVM Configuration Using the Fusion GUI 13
5.1 Configuration Procedure 13
6 Test Procedure 13
6.1 Line/Load Regulation and Efficiency Measurement Procedure 13
6.2 Control Loop Gain and Phase Measurement Procedure 14
6.3 Efficiency 14
6.4 Equipment Turn-on and Shutdown 15
7 Performance Data and Typical Characteristic Curves 16
8 EVM Assembly Drawing and PCB Layout 19
9 List of Materials 22
10 Fusion GUI 24

1 Description

The PWR710-EVM operates as a single output converter. The nominal 12-V bus produced a regulated, 1.0-V output at up to 120 A of load current. The PWR710-EVM demonstrates the controller in a typical low-voltage high-current application while providing a number of test points to evaluate the performance of the controller. Refer to TPS53647 (SLUSC39) datasheet for more information on multi-phase configuration.

1.1 Typical Applications

- ASIC power in communications equipment
- High density power solutions
- Server power
- Smart power systems

Copyright © 2015–2017, Texas Instruments Incorporated

1.2 Features

- Regulated 1.0-V output up to 120-A DC steady state output current
- Output can be marginable and trimmable via the PMBus interface
- Programmable through PMBus interface
  - UVLO protection threshold
  - Soft-start slew-rate
  - Device enable and disable
  - Overcurrent warning and fault limits
  - SW frequency
  - BOOT voltage
- Convenient test points for probing critical waveforms

2 Electrical Performance Specifications

Table 1. PWR710-EVM Electrical Performance Specifications

PARAMETER		TEST CONDITIONS	MIN	TYP	MAX	UNITS
INPUT CHARACTERISTICS						
V_{IN}	Voltage range		8	12	14	V
$I_{IN(max)}$	Maximum input current	V_{IN} = 8 V, I_{OUT} = 120 A		17		A
	No load input current	V_{IN} = 14 V, I_{OUT} = 0 A		120		mA
OUTPUT CHARACTERISTICS						
V_{OUT}	Output voltage			1.0		V
I_{OUT}	Output load current		0		120	A
	Output voltage line regulation	8 V ≤ V_{IN} ≤ 14 V		0.03%		
	Output voltage load regulation	0 A ≤ I_{OUT} ≤ 120 A		0.03%		
V_{RIPPLE}	Output voltage ripple	V_{IN} = 12 V, I_{OUT} = 120 A		3.8		mVpp
	Output overcurrent protection (OCP)			150		A
SYSTEMS CHARACTERISTICS						
f_{SW}	Switching frequency	V_{IN} = 12 V		500		kHz
	Peak efficiency	V_{IN} = 12 V, I_{OUT} = 74 A		91%		
	Full-load efficiency	V_{IN} = 12 V, I_{OUT} = 120 A		90%		
T_J	Operating temperature			25		ºC

Copyright © 2015–2017, Texas Instruments Incorporated

3 Schematic

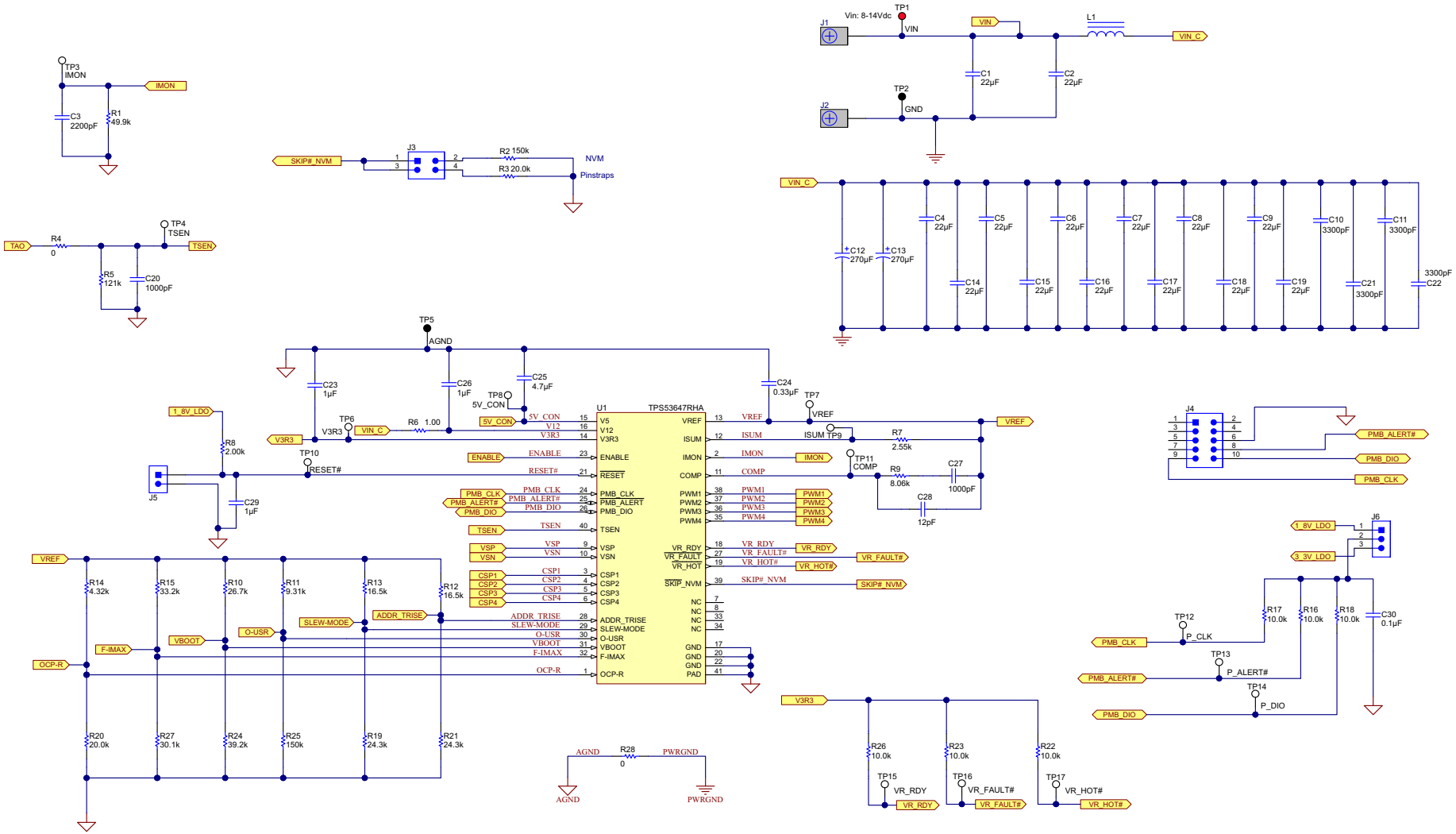

Figure 1. PWR710-EVM Schematic Controller

Copyright © 2015–2017, Texas Instruments Incorporated

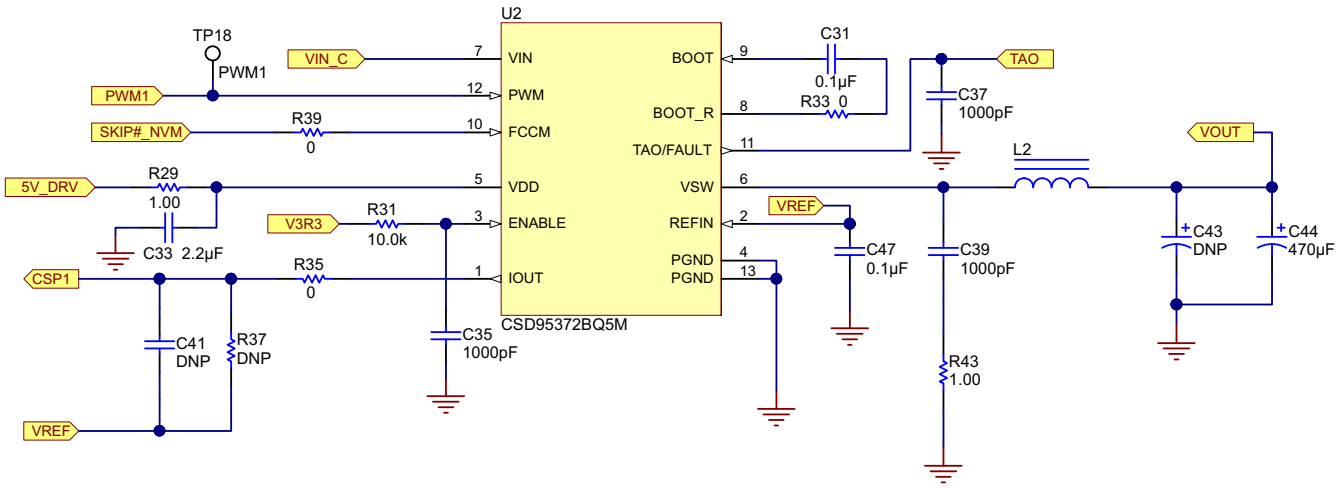

Figure 2. Phase 1

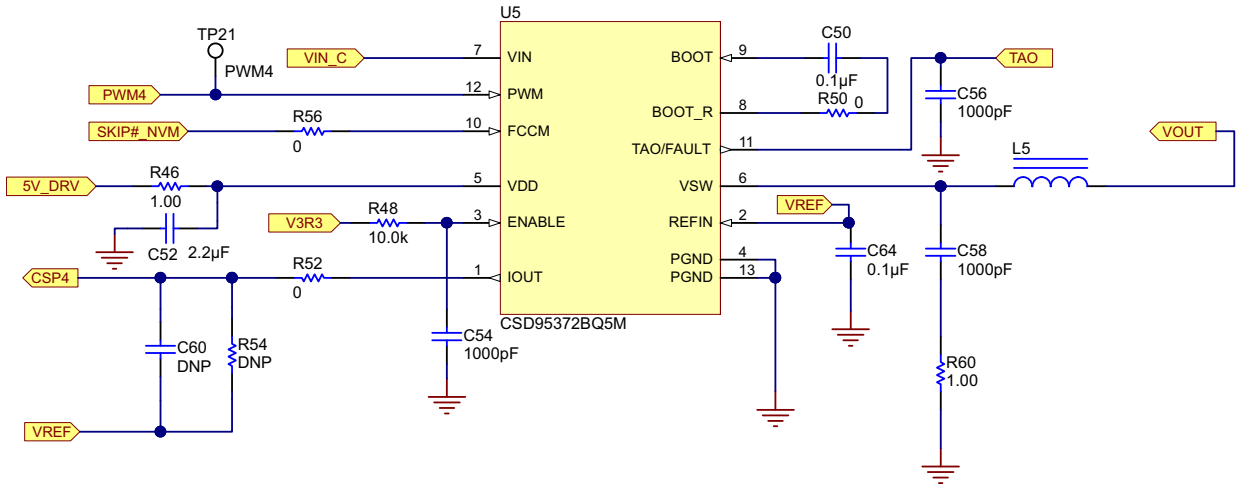

Figure 3. Phase 2

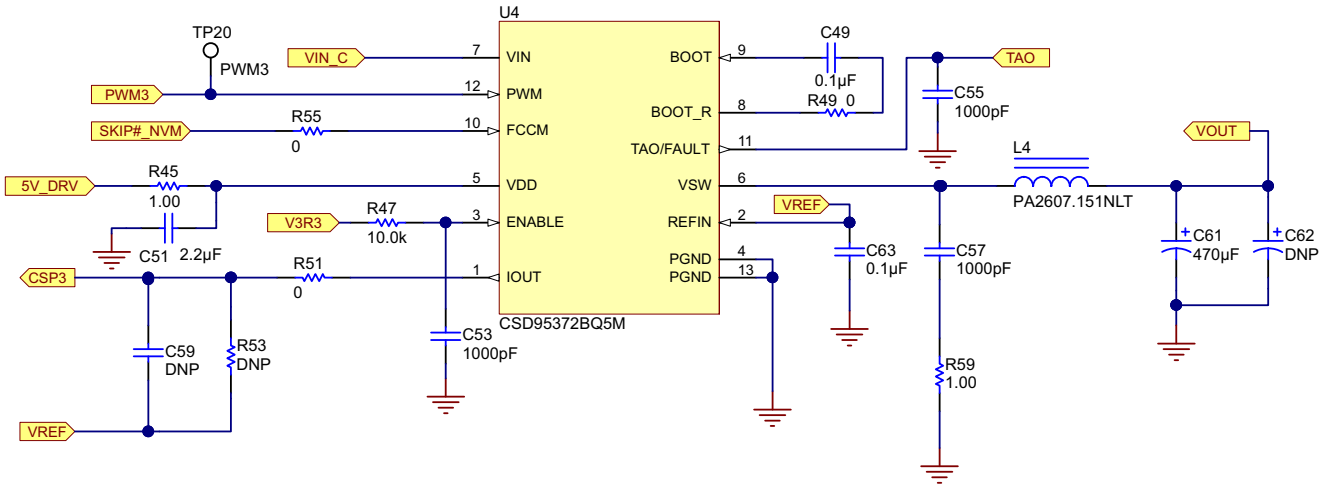

Figure 4. Phase 3

Copyright © 2015–2017, Texas Instruments Incorporated

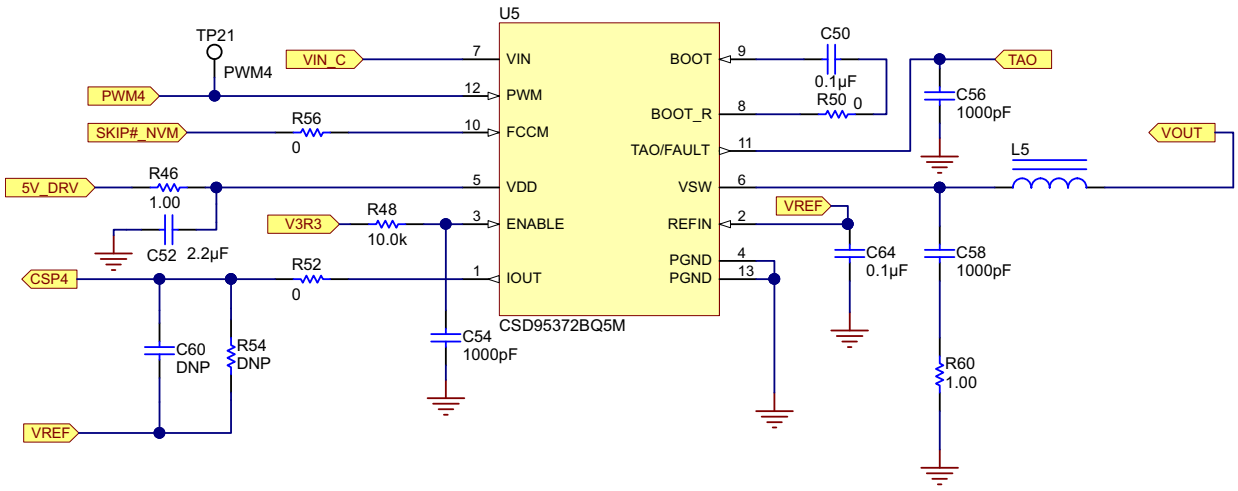

Figure 5. Phase 4

Copyright © 2015–2017, Texas Instruments Incorporated

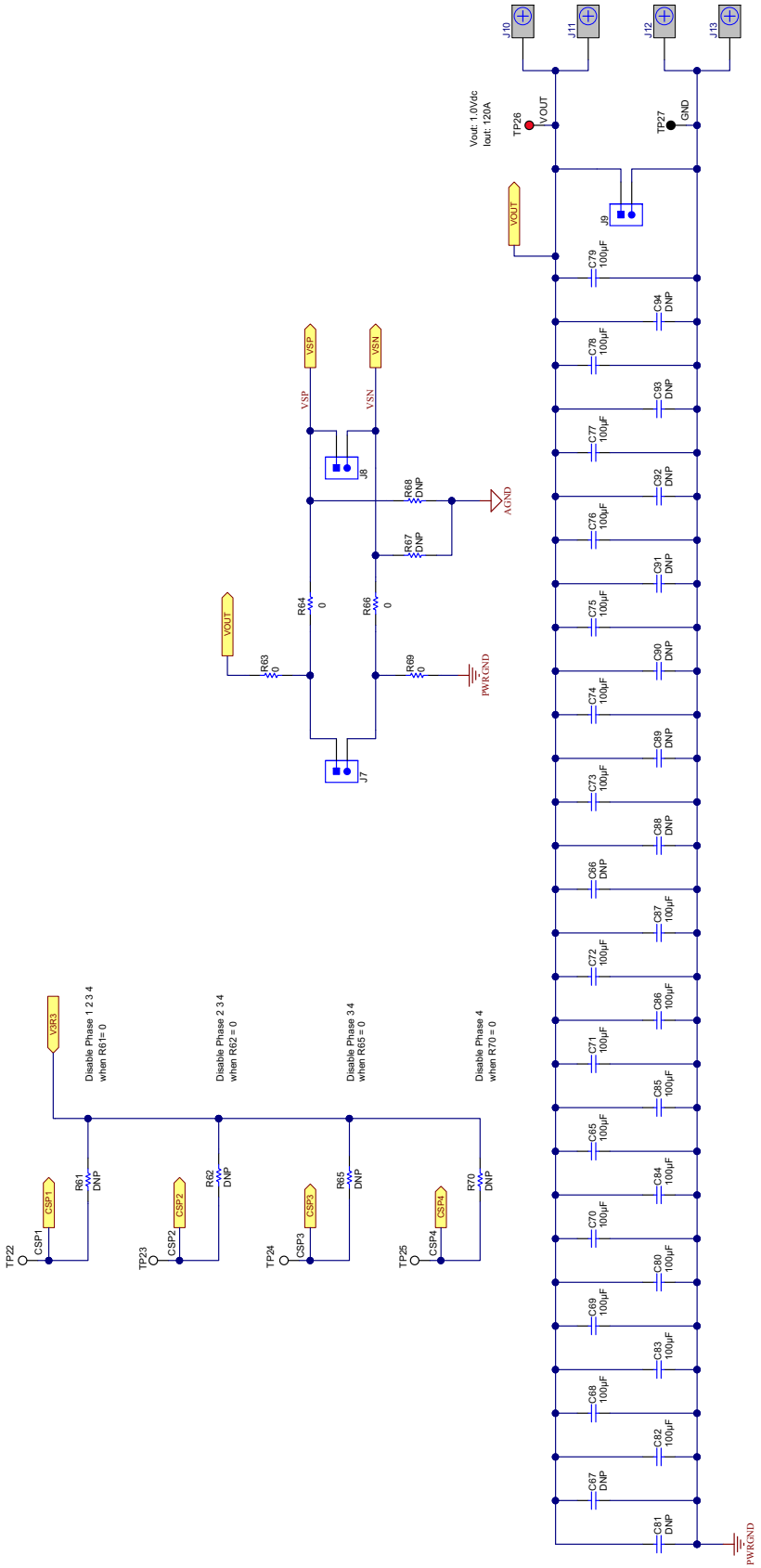

Figure 6. Output Filter

Copyright © 2015–2017, Texas Instruments Incorporated

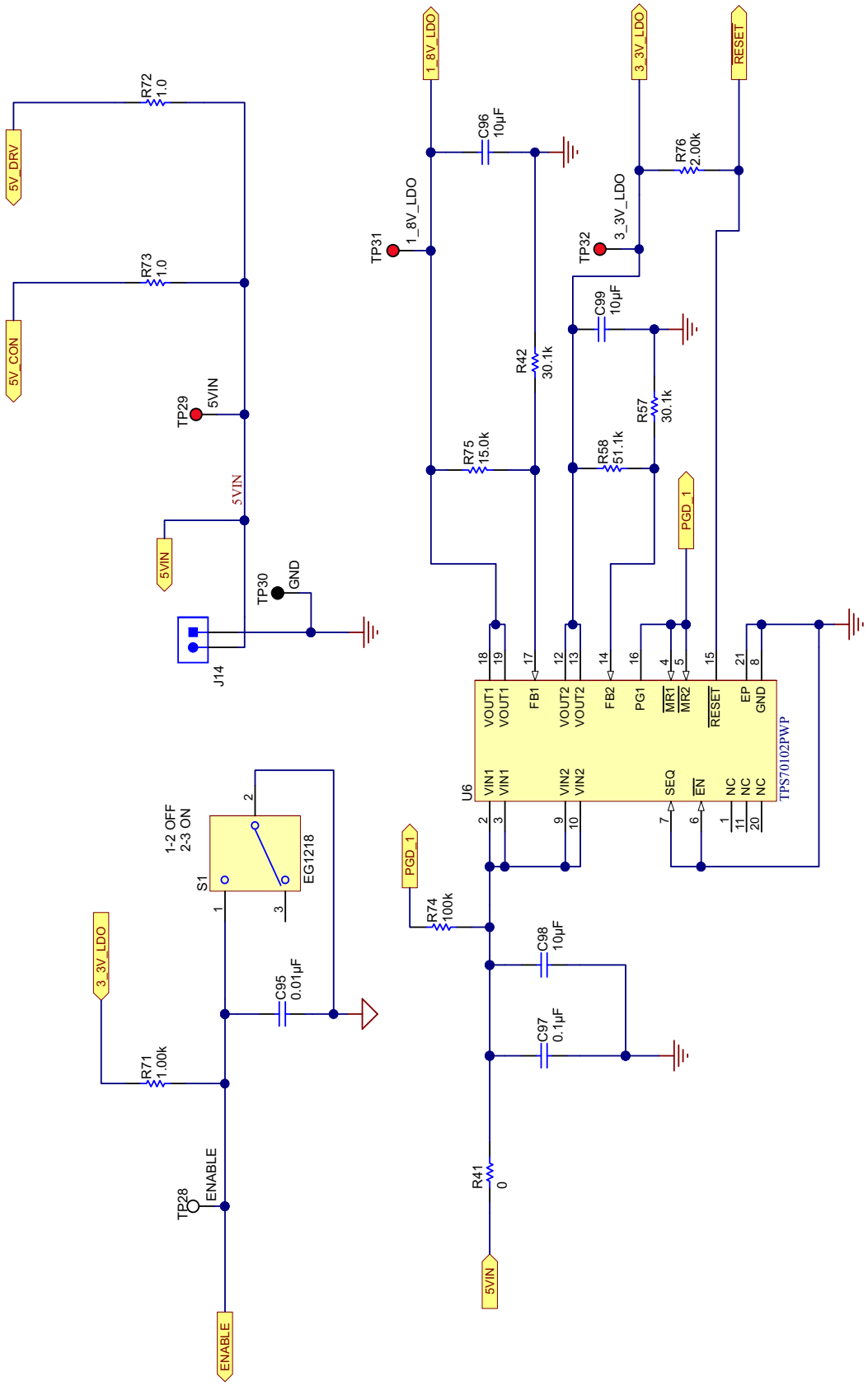

Figure 7. Auxiliary Circuitry

Copyright © 2015–2017, Texas Instruments Incorporated

4 Test Setup

4.1 Test and Configuration Software

Use the TI Fusion Digital Power Designer software to change any of the default configuration parameters on the EVM. To download this software, visit the Digital Power Software page.

4.1.1 Description

Fusion Digital Power Designer is the graphic user interface (GUI) used to configure and monitor controller on the EVM. The software uses the PMBus protocol to communicate with the controller over serial bus by way of a TI USB adapter (see Figure 9).

4.1.2 TI Fusion Digital Power Designer Features

The software offers these features:

- Turn on or off the power supply output, either through the hardware control line or the PMBus operation command.
- Monitor real-time data. Items such as input voltage, output voltage, output current, temperature, warnings and faults are continuously monitored and displayed by the GUI.
- Configure common operating characteristics such as output voltage trim and margin, V_{IN} UVLO, soft-start slew rate, switching frequency, and warning and fault thresholds.

4.2 Test Equipment

4.2.1 Voltage Sources

Two DC input voltage sources are needed (VIN and 5VIN). Use an input voltage source VIN between 0 V and 14 V variable DC source capable of supplying 20 Adc. Use another input voltage source 5VIN a 5-V DC source capable of supplying 1Adc. Connect VIN to J1, J2 and connect 5VIN to J14 as shown in Figure 8.

4.2.2 Multimeters

It is recommended to use two separate multimeters as shown in Figure 8. One meter is to measure V_{IN}, the other one is to measure V_{OUT}.

4.2.3 Output Load

The electronic load is recommended for the test setup as shown in Figure 8. The load should be capable of 120 A.

4.2.4 Oscilloscope

Use an oscilloscope to measure output noise and ripple. Use a coaxial cable to measure output ripple across the output ceramic capacitor, C76.

4.2.5 Fan

During prolonged operation at high load, it may be necessary to provide forced air cooling with a small fan aimed at the EVM. Maintain the temperature of the devices on the EVM under 105°C.

4.2.6 USB-to-GPIO Interface Adapter

A communications adapter is required between the EVM and the host computer. This EVM is designed to use the Texas Instruments USB-to-GPIO adapter, see Figure 9. To purchase this adapter visit the TI usb-to-gpio tool page.

4.2.7 Recommended Wire Gauge

Copyright © 2015–2017, Texas Instruments Incorporated

Table 2. Recommended Wire Gauge

Voltage (V)	CONNECT	RECOMMENDED WIRE SIZE	MAXIMUM TOTAL WIRE LENGTH (1) (FEET)		
			RETURN	INPUT	OUTPUT
12	VIN to J1	AWG #10	2	2	n/a
5	5VIN to J14	AWG #18		2	n/a
1	Load to J10 and J11	4 × AWG #10		n/a	2

(1) Total length of wire less than 4 feet (2 feet input or output, 2 feet return).

4.3 Recommended Test Setup

Figure 8 shows the recommended test setup, which includes VIN and 5VIN input voltage sources, output load, and USB-to-GPIO adapter.

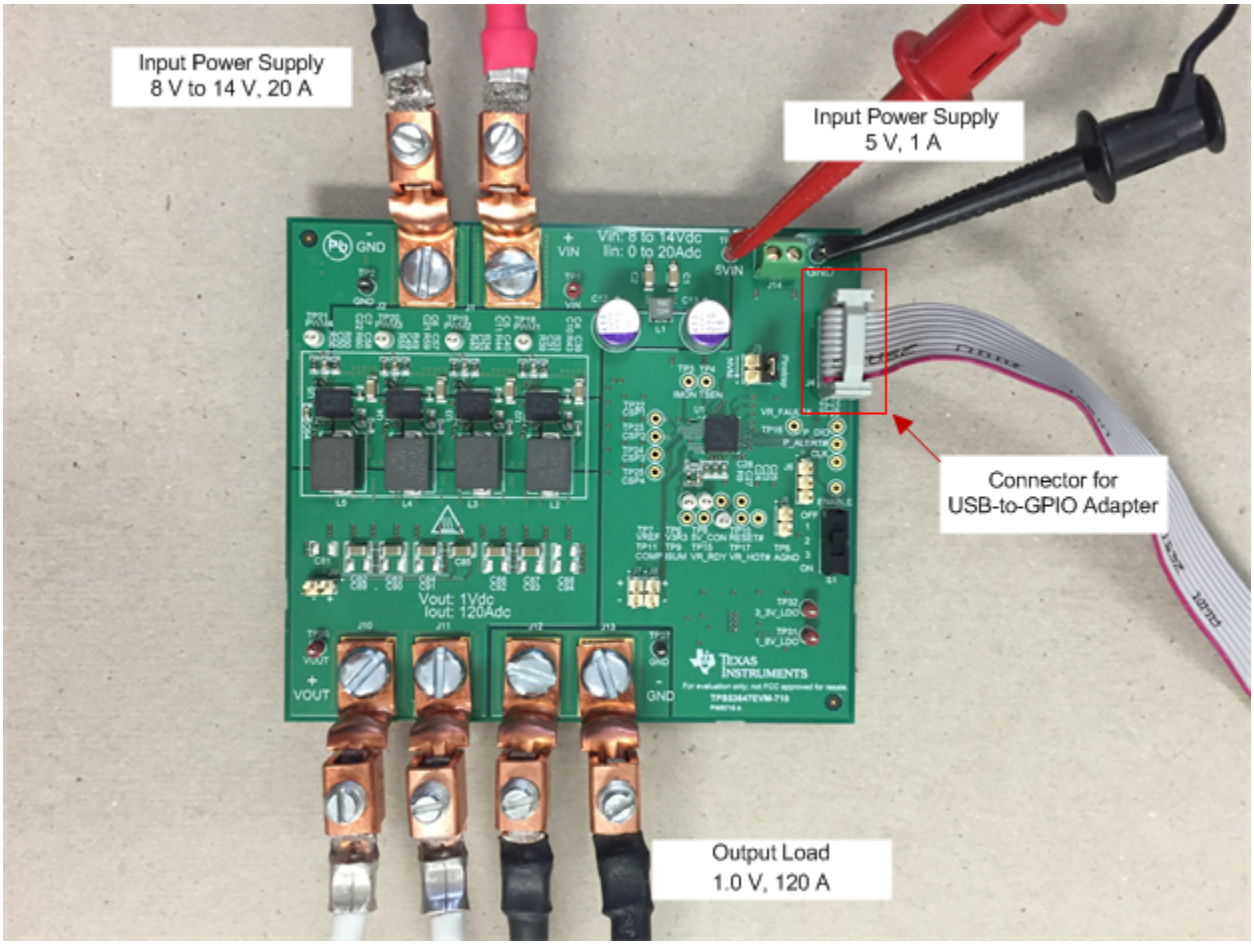

Figure 8. PWR710-EVM Recommended Test Setup

Copyright © 2015–2017, Texas Instruments Incorporated

4.4 USB Interface Adapter and Cable

Figure 9 shows the USB interface adapter and cable.

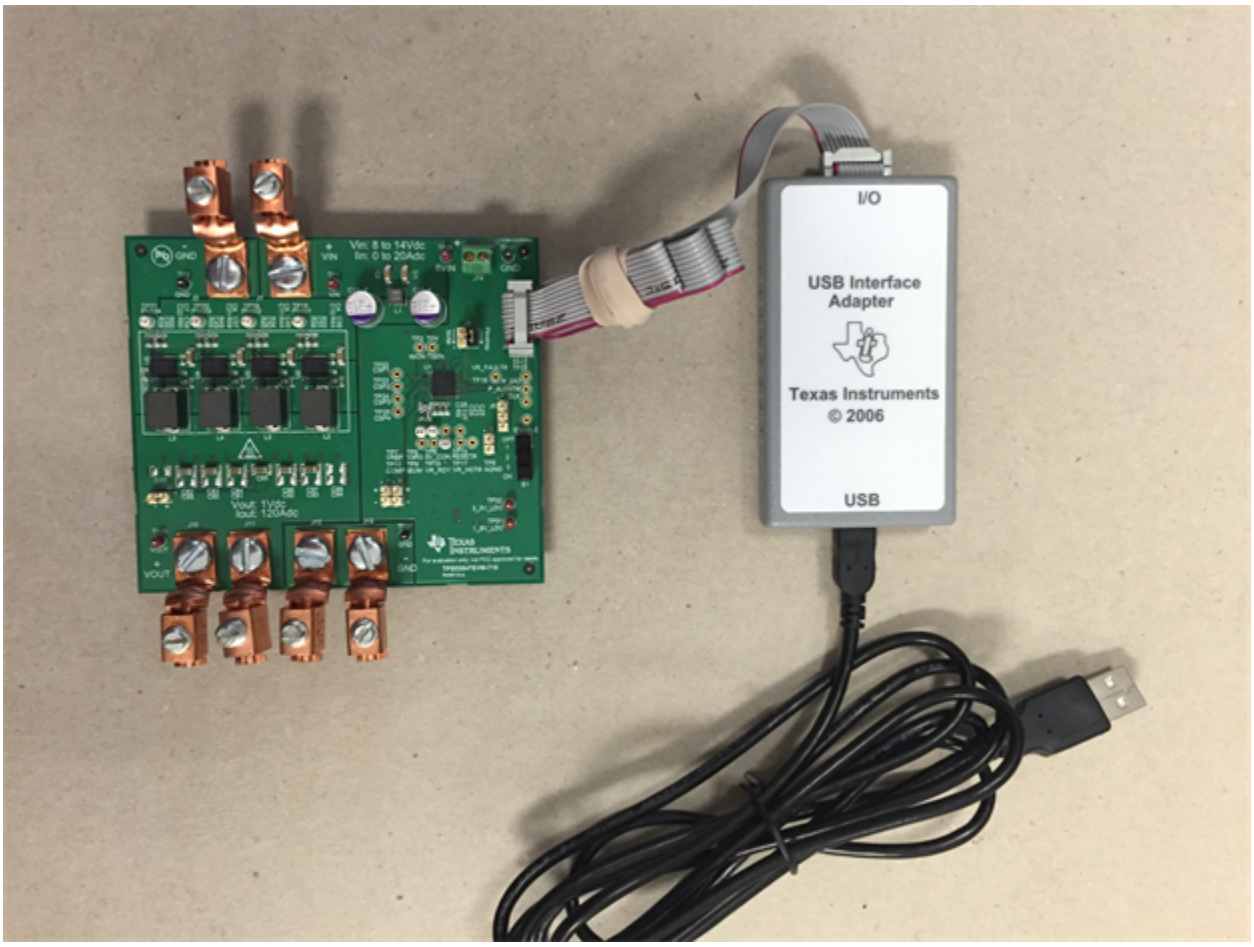

Figure 9. Texas Instruments USB-to-GPIO Adapter and Connections

Copyright © 2015–2017, Texas Instruments Incorporated

4.5 List of Test Points and Connectors

Table 3 lists the test point functions.

Table 3. Test Point Functions

TEST POINT	NAME	DESCRIPTION
TP1	VIN	VIN+ measurement point
TP2	GND	VIN– measurement point
TP3	IMON	IMON signal
TP4	TSEN	TSEN signal
TP5	AGND	Analog Ground
TP6	V3R3	Internal 3.3-V LDO output measurement point
TP7	VREF	Internal reference voltage measurement point
TP8	5V_CON	5-V controller power input measurement point
TP9	ISUM	ISUM signal
TP10	RESET#	$\overline{\text{RESET}}$ signal
TP11	COMP	COMP signal
TP12	P_CLK	PMBus clock signal
TP13	P_ALERT#	PMBus alert signal
TP14	P_DIO	PMBus digital I/O signal
TP15	VR_RDY	VR_RDY signal
TP16	VR_FAULT#	$\overline{\text{VR_FAULT}}$ signal
TP17	VR_HOT#	$\overline{\text{VR_HOT}}$ signal
TP18	PWM1	PWM signal of Phase 1
TP19	PWM2	PWM signal of Phase 2
TP20	PWM3	PWM signal of Phase 3
TP21	PWM4	PWM signal of Phase 4
TP22	CSP1	Current sense signal of Phase 1
TP23	CSP2	Current sense signal of Phase 2
TP24	CSP3	Current sense signal of Phase 3
TP25	CSP4	Current sense signal of Phase 4
TP26	VOUT	V_{OUT}+ measurement point
TP27	GND	V_{OUT}– measurement point
TP28	ENABLE	ENABLE signal
TP29	5VIN	5VIN+ measurement point
TP30	GND	5VIN– measurement point
TP31	1_8V_LDO	1.8-V external LDO output measurement point
TP32	3_3V_LDO	3.3-V external LDO output measurement point

Table 4 lists the EVM connector functions.

Table 4. Connector Functions

Connector	TYPE	DESCRIPTION
J1	CB35-36-CY	VIN+ connector
J2	CB35-36-CY	VIN– connector
J3	TSW-102-07-G-D	Choose NVM or pin strap
J4	TSW-105-07-G-D	PMBus connector
J5	TSW-102-07-G-S	Reset

Copyright © 2015–2017, Texas Instruments Incorporated

Table 4. Connector Functions (continued)

Connector	TYPE	DESCRIPTION
J6	TSW-103-07-G-S	Choose PMBus pull up voltage(1.8V or 3.3V)
J7	TSW-102-07-G-S	V_{OUT} connector for bode plot measurement
J8	TSW-102-07-G-S	V_{OUT} connector for bode plot measurement
J9	TSW-102-07-G-S	V_{OUT} measurement connector
J10	CB35-36-CY	V_{OUT}+ connector
J11	CB35-36-CY	V_{OUT}+ connector
J12	CB35-36-CY	V_{OUT}- connector
J13	CB35-36-CY	V_{OUT}- connector
J14	ED555/2DS	5VIN connector

Copyright © 2015–2017, Texas Instruments Incorporated

5 EVM Configuration Using the Fusion GUI

The controller on this EVM leaves the factory pre-configured. Table 5 lists some key factory configuration parameters from the configuration file.

Table 5. Key Factory Configuration Parameters

CMD NAME	CMDCODEHEX	ENCODEDHEX	DECODED	COMMENTS
VIN UVLO	0xE0	0x01	7.25 V	Input voltage turn on threshold
IOUT_OC_FAULT_LIMIT	0x46	0x0096	150.00 A	OC fault level
IOUT_OC_WARN_LIMIT	0x4A	0x0078	120.0 A	OC warning level
ON_OFF_CONFIG	0x02	0x17	Control Pin only	Power is converted when the control pin is active
OT_FAULT_LIMIT	0x4F	0x007D	125 °C	OT fault level
OT_WARN_LIMIT	0x51	0x005F	95 °C	OT warn level
Max Num Phases	0xE4	0x03	4 Phase	phase numbers
SWITCHING FREQUENCY	0xDC	0x20	500kHz	switching frequency
VBOOT	0xDB	0x97	1.000V	VBOOT voltage

To configure the EVM with other than the factory settings shown in Table 5, use the *TI Fusion Digital Power Designer* software for reconfiguration. Be sure to apply the 5VIN input voltage to the EVM prior to launching the software. This sequence ensures that the controller and GUI recognize each other.

5.1 Configuration Procedure

1. Adjust the input supply 5VIN to provide 5 VDC, current limited to 1 A.
2. Apply the input power source VIN to the EVM. Refer to Figure 8 and Figure 9 for connections and test setup.
3. Launch the Fusion GUI software. Refer to the screenshots in Section 10 for more information.
4. Configure the EVM operating parameters as desired.

6 Test Procedure

6.1 Line/Load Regulation and Efficiency Measurement Procedure

1. Set up EVM as described in Figure 8.
2. Ensure the electronic load is set to draw 0 Adc.
3. Increase 5VIN from 0 V to 5 V.
4. Increase VIN from 0 V to 12 V.
5. Put switch S1 to *ON* position.
6. Turn on the external fan if necessary.
7. Vary the load from 0 Adc to 120 Adc. Ensure V_{OUT} remains in regulation as defined in Table 1.
8. Vary VIN from 8 V to 14 V. Ensure V_{OUT} remains in regulation as defined in Table 1.
9. Decrease the load to 0 A.
10. Put switch S1 to *OFF* position.
11. Decrease VIN to 0 V.
12. Decrease 5VIN to 0 V.
13. Shut down the external fan if in use.

Copyright © 2015–2017, Texas Instruments Incorporated

6.2 Control Loop Gain and Phase Measurement Procedure

The PWR710 EVM includes a 0-Ω series resistor R64 in the feedback loop. This resistor value can be changed to 10 Ω and then be used for loop response analysis, which is accessible at the connector J7 and J8. These two connectors should be used during loop response measurements as the injection points for the loop perturbation. See short description below in Table 6.

Table 6. Test Points for Loop Response Measurements

TEST POINT	NODE	DESCRIPTION	COMMENT
J8+	INPUT	Input to feedback of V_{OUT}	The amplitude of the perturbation at this node should be limited to less than 100 mV.
J7+	OUTPUT	Resulting output of V_{OUT}	Bode can be measured by a network analyzer as J7+ / J8+.

6.2.1 Procedure

1. Set up EVM as described in Figure 8.
2. Connect the network analyzer isolation transformer from J8+ to J7+.
3. Connect the input signal measurement probe to J8+.
4. Connect output signal measurement probe to J7+.
5. Connect the ground leads of both probe channels to J7– or J8–.
6. On the network analyzer, measure the Bode as J7+ / J8+ (Out / In).
7. Disconnect the isolation transformer from the bode plot test points and change the resistor R64 back to 0 Ω before making other measurements, because the signal injection into the feedback loop may interfere with the accuracy of other measurements.

6.3 Efficiency

In order to measure the efficiency of the power train on the EVM, it is important to measure the voltages at the correct location. This is necessary because otherwise the measurements will include losses that are not related to the power train itself. Losses incurred by the voltage drop in the copper traces and in the input and output connectors are not related to the efficiency of the power train, and they should not be included in efficiency measurements.

Input current can be measured at any point in the input wires, and output current can be measured anywhere in the output wires of the output being measured.

Figure 10 shows the measurement points for input voltage and output voltage. Using these measurement points results in efficiency measurements that do not include losses due to the connectors and PCB traces.

Copyright © 2015–2017, Texas Instruments Incorporated

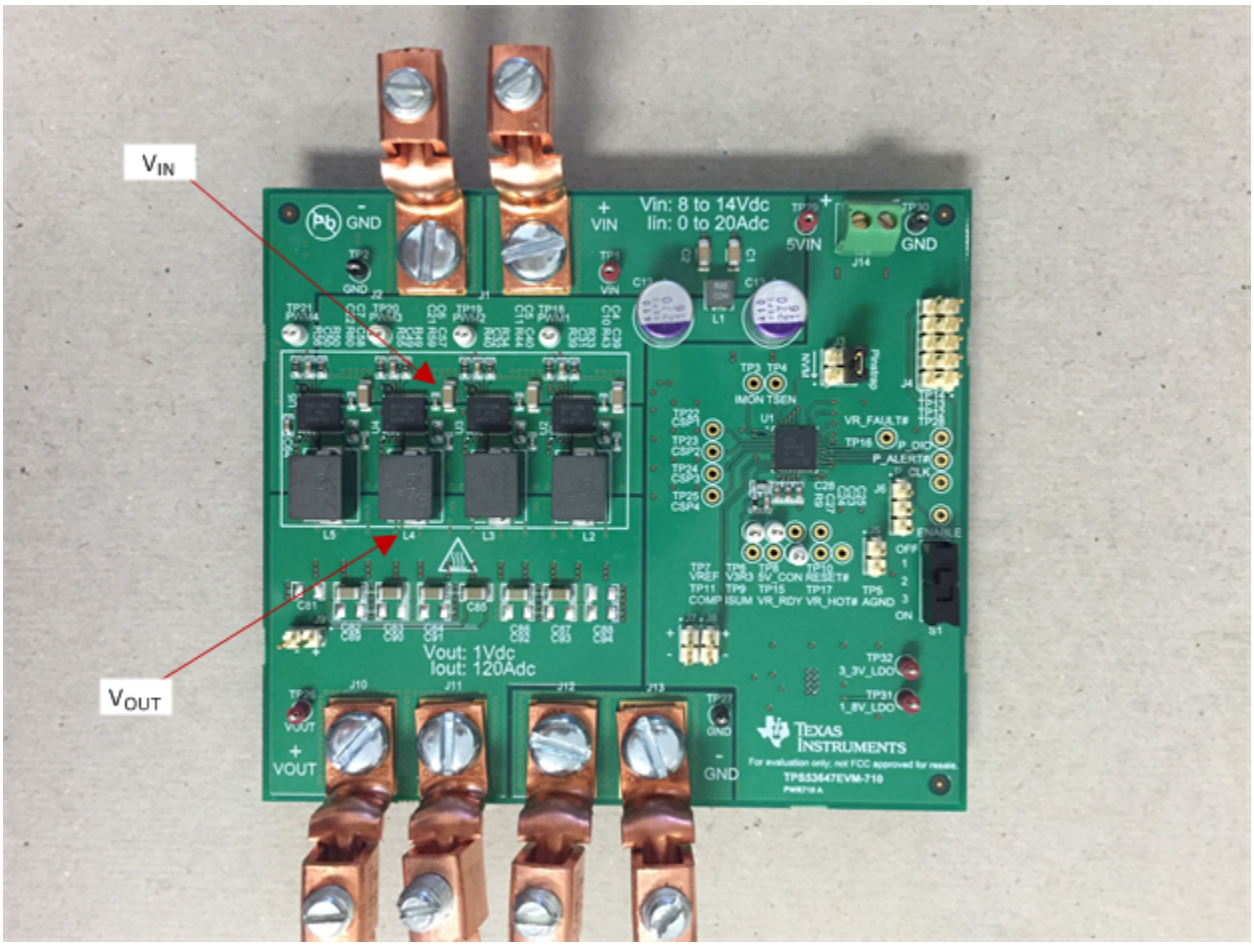

Figure 10. Test Setup for Efficiency Measurement

6.4 Equipment Turn-on and Shutdown

6.4.1 Turn-on Sequence

1. Turn on input power supply 5VIN.
2. Turn on input power supply VIN and increase VIN above 8 V.
3. Switch S1 to 'ON' position.
4. Adjust load current as desired.
5. Turn on the external fan if necessary.

6.4.2 Shutdown Sequence

1. Reduce the load current to 0 A.
2. Switch S1 to 'OFF' position.
3. Reduce input voltage to 0 V and shut down input power supply VIN.
4. Shut down input power supply 5VIN.
5. Shut down the external FAN if in use.

Copyright © 2015–2017, Texas Instruments Incorporated

7 Performance Data and Typical Characteristic Curves

Figure 11 through Figure 13 show the typical performance curves for the PWR710-EVM.

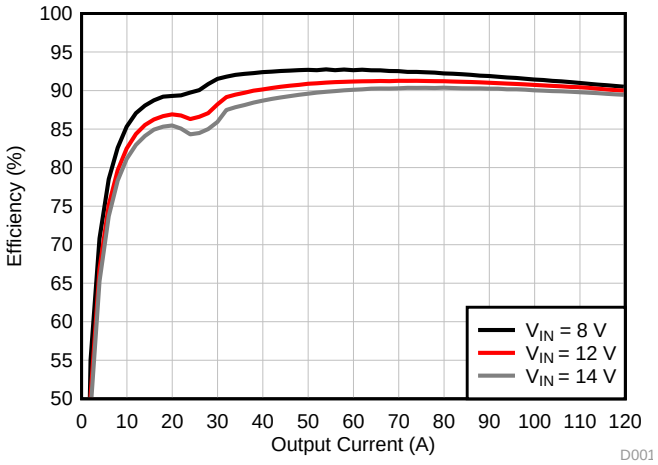

Figure 11. Efficiency of Output vs Line and Load (V_{OUT} = 1.0 V)

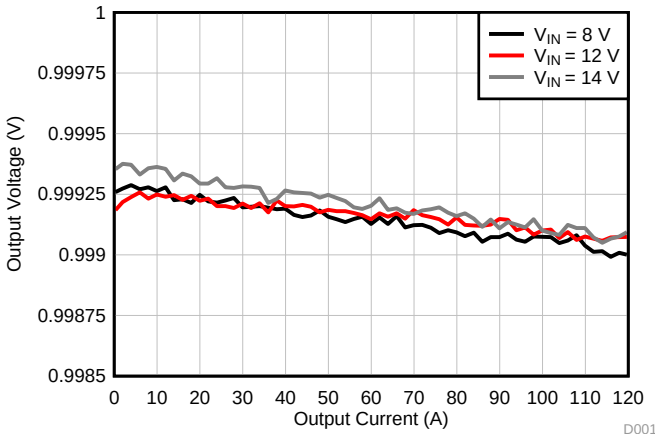

Figure 12. Load Regulation (V_{OUT} = 1.0 V)

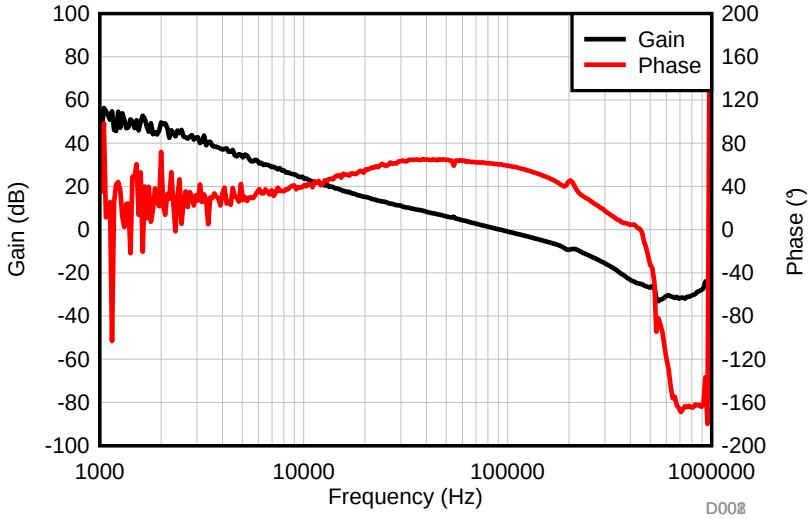

Figure 13. Bode Plot (V_{IN}= 12 V, V_{OUT} = 1.0 V, I_{OUT} = 120A)

Copyright © 2015–2017, Texas Instruments Incorporated

Figure 14 through Figure 19 show the waveforms for the PWR710-EVM.

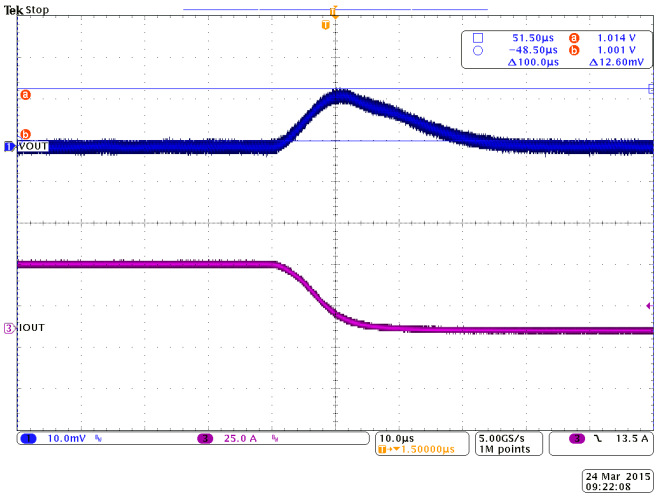

VIN = 12 V, VOUT = 1.0 V

Figure 14. Transient Response (Load Step 0 A to 40 A, 5A/us Slew Rate)

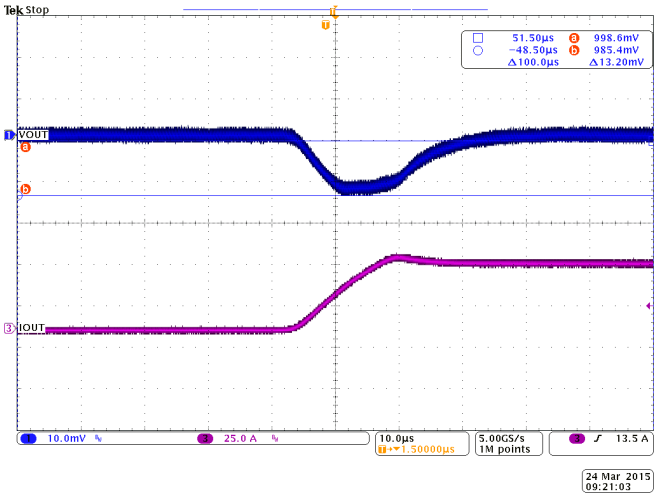

VIN = 12 V, VOUT = 1.0 V

Figure 15. Transient Response (Load Step 40 A to 0 A, 5A/us Slew Rate)

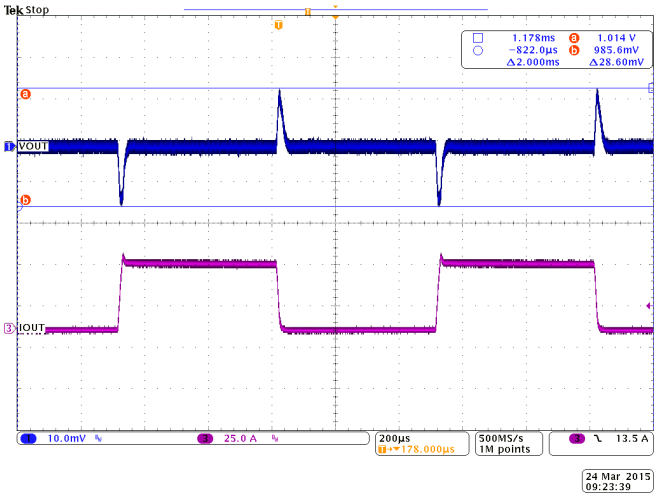

VIN = 12 V, VOUT = 1.0 V

Figure 16. Transient Response (Load Step 0 A to 40 A to 0A, 5A/us Slew Rate)

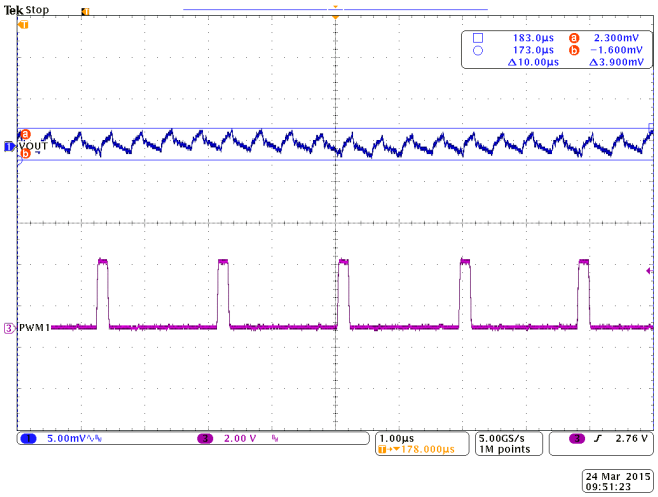

VIN = 12 V, VOUT = 1.0 V, IOUT = 120 A

Figure 17. Output Ripple

Copyright © 2015–2017, Texas Instruments Incorporated

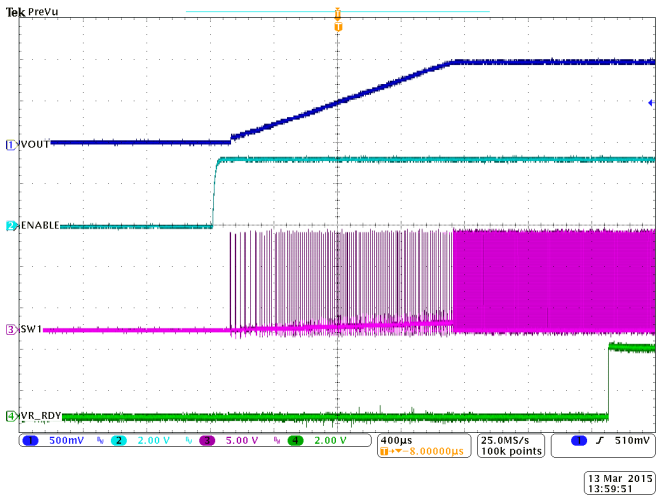

VIN = 12 V, VOUT = 1.0 V, IOUT = 0 A

Figure 18. Enable Startup

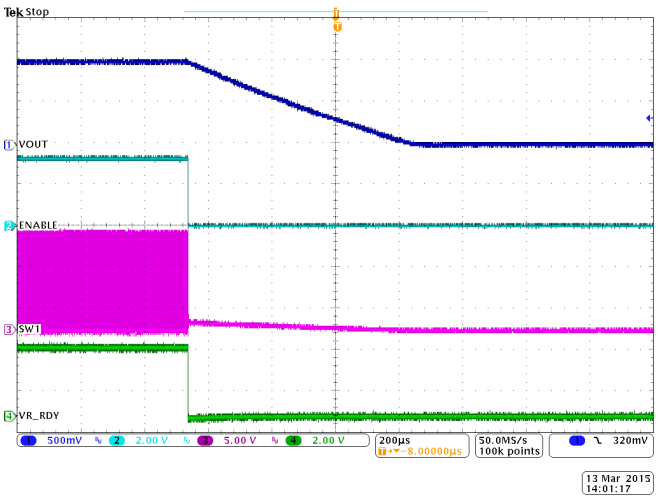

VIN = 12 V, VOUT = 1 V, IOUT = 6 A

Figure 19. Enable Shutdown

Copyright © 2015–2017, Texas Instruments Incorporated

8 EVM Assembly Drawing and PCB Layout

Figure 20 through Figure 29 show the design of the PWR710 EVM printed circuit board.

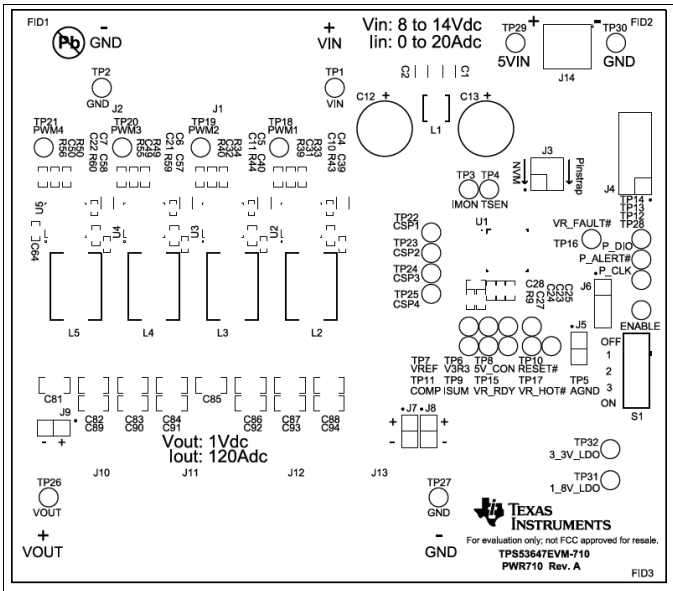

Figure 20. Top Layer Assembly Drawing (Top View)

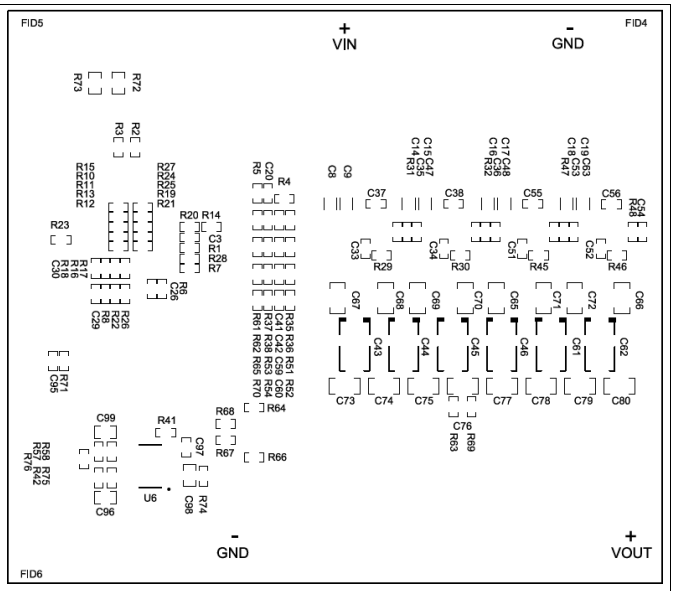

Figure 21. Bottom Layer Assembly Drawing (Bottom View)

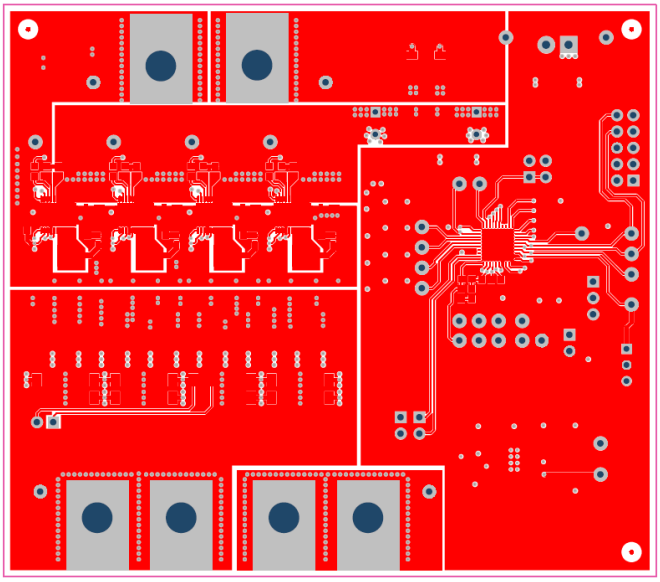

Figure 22. Top Copper (Top View)

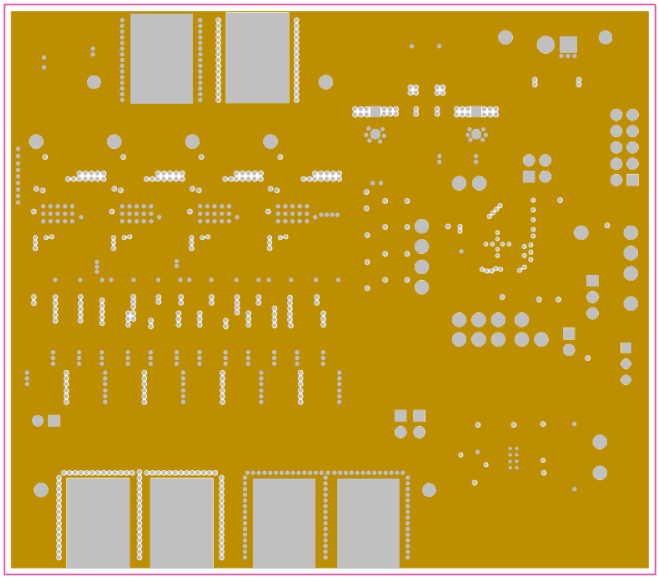

Figure 23. Internal Layer 1 (Top View)

Copyright © 2015–2017, Texas Instruments Incorporated

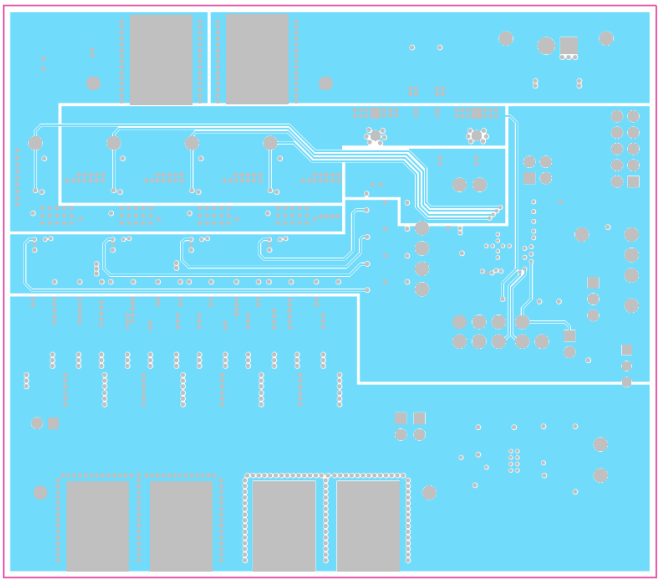

Figure 24. Internal Layer 2 (Top View)

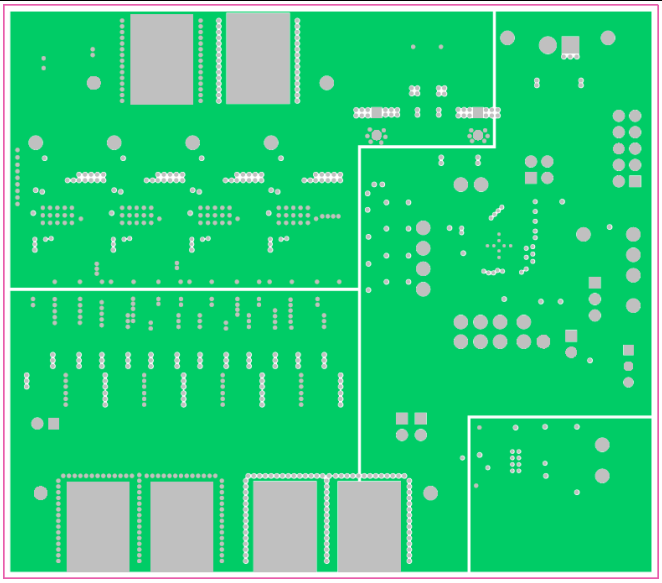

Figure 25. Internal Layer 3 (Top View)

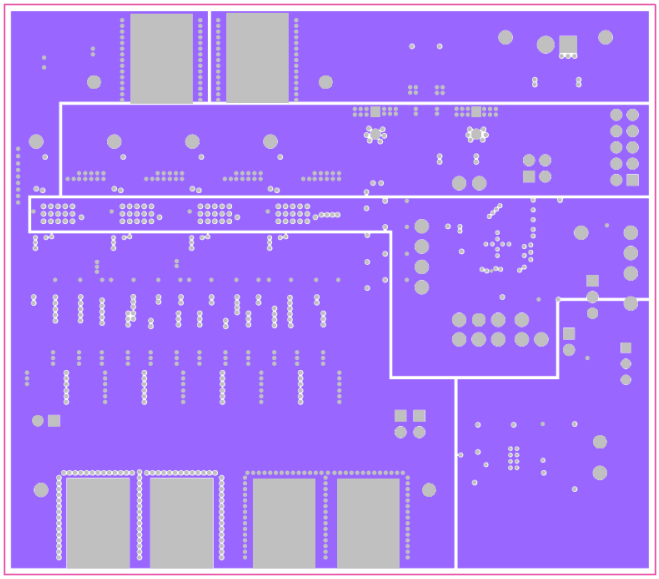

Figure 26. Internal Layer 4 (Top View)

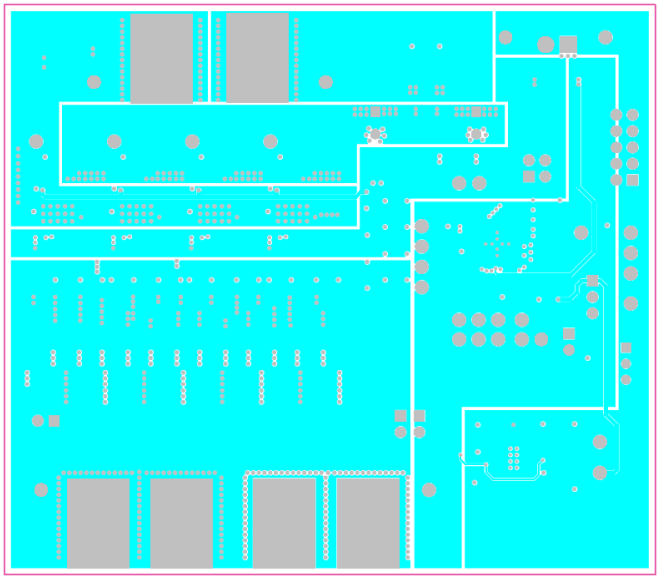

Figure 27. Internal Layer 5 (Top View)

Copyright © 2015–2017, Texas Instruments Incorporated

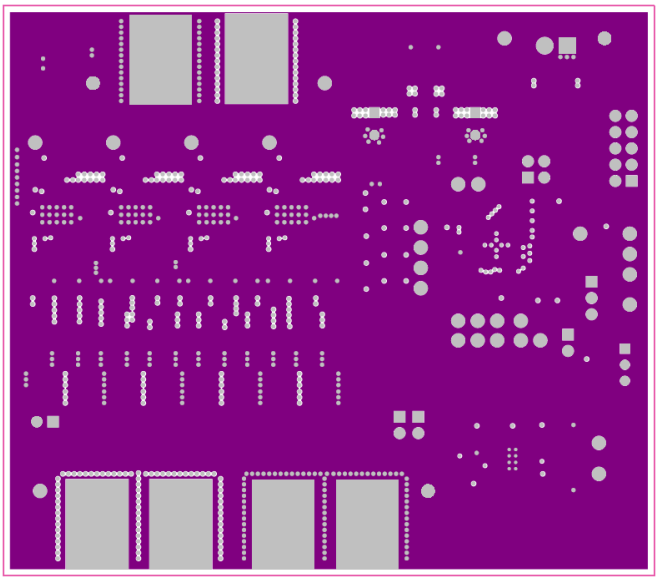

Figure 28. Internal Layer 6 (Top View)

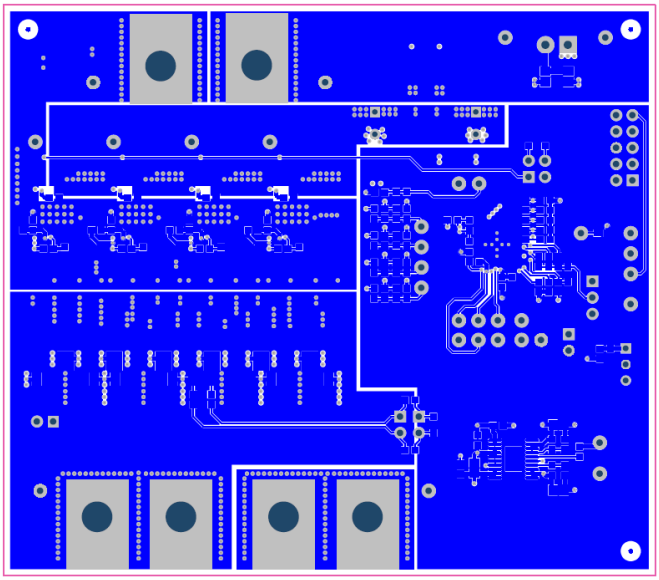

Figure 29. Bottom Copper (Top View)

Copyright © 2015–2017, Texas Instruments Incorporated

9 List of Materials

Table 7. List of Materials

QTY[1]	REF DES	DESCRIPTION	PART NUMBER	MANUF
1	PCB	Printed Circuit Board	PWR710	Any
14	C1, C2, C4, C5, C6, C7, C8, C9, C14, C15, C16, C17, C18, C19	Capacitor, ceramic 22 µF, 25 V, ±20%, X5R, 1206_190	C3216X5R1E226M160AB	TDK
1	C3	Capacitor, ceramic 2200 pF, 50 V, ±10%, X7R, 0603	C0603C222K5RAC	Kemet
4	C10, C11, C21, C22	Capacitor, ceramic 3300 pF, 50 V, ±10%, X7R, 0402	C1005X7R1H332K	TDK
2	C12, C13	Capacitor, aluminum, 270 µF, 16 V, ±20%, 0.01 Ω, TH	16SEPC270MX	Panasonic
1	C20	Capacitor, ceramic 1000 pF, 16 V, ±10%, X7R, 0603	GRM188R71C102KA01D	MuRata
2	C23, C29	Capacitor, ceramic 1 µF, 10 V, ±10%, X7R, 0603	GRM188R71A105KA61D	MuRata
1	C24	Capacitor, ceramic 0.33 µF, 10 V, ±10%, X7R, 0603	GRM188R71A334KA61D	MuRata
1	C25	Capacitor, ceramic 4.7 µF, 16 V, ±10%, X5R, 0603	GRM188R61C475KAAJ	MuRata
1	C26	Capacitor, ceramic 1 µF, 25 V, ±10%, X7R, 0603	GRM188R71E105KA12D	MuRata
1	C27	Capacitor, ceramic 1000 pF, 25 V, ±5%, C0G/NP0, 0603	GRM1885C1E102JA01D	MuRata
1	C28	Capacitor, ceramic 12 pF, 50 V, ±5%, C0G/NP0, 0603	GRM1885C1H120JA01D	MuRata
10	C30, C31, C32, C47, C48, C49, C50, C63, C64, C97	Capacitor, ceramic 0.1 µF, 25 V, ±10%, X7R, 0603	GRM188R71E104KA01D	MuRata
4	C33, C34, C51, C52	Capacitor, ceramic 2.2 µF, 10 V, ±10%, X7R, 0603	GRM188R71A225KE15D	MuRata
8	C35, C36, C37, C38, C53, C54, C55, C56	Capacitor, ceramic 1000 pF, 25 V, ±10%, X7R, 0603	GRM188R71E102KA01D	MuRata
4	C39, C40, C57, C58	Capacitor, ceramic 1000 pF, 50 V, ±10%, X7R, 0402	GRM155R71H102KA01D	MuRata
4	C44, C45, C46, C61	Capacitor, aluminum polymer, 470 µF, 2.5 V, ±20%, 0.003 Ω, SMD 7.3 x 1.9 x 4.3mm SMD	EEF-GX0E471R	Panasonic
20	C65, C68, C69, C70, C71, C72, C73, C74, C75, C76, C77, C78, C79, C80, C82, C83, C84, C85, C86, C87	Capacitor, ceramic 100 µF, 4 V, ±20%, X5R, 1206	GRM31CR60G107ME39L	MuRata
1	C95	Capacitor, ceramic 0.01 µF, 25 V, ±10%, X7R, 0603	GRM188R71E103KA01D	MuRata
3	C96, C98, C99	Capacitor, ceramic 10 µF, 10 V, ±20%, X5R, 0805	GRM219R61A106ME47	MuRata
6	H1, H2, H3, H4, H5, H6	Machine screw nut, Hex, 3/8', Stn, Steel, 10-32	HNSS 102	
6	H7, H8, H9, H10, H11, H12	Machine screw pan Slotted 10-32	PMS 102 0050 SL	B&F Fastener Supply
6	H13, H14, H15, H16, H17, H18	Washer, split lock, #10	1477	Keystone
6	J1, J2, J10, J11, J12, J13	Terminal, 50-A Lug	CB35-36-CY	Panduit

(1) component of quantity 0 indicates not populated.

Copyright © 2015–2017, Texas Instruments Incorporated

Table 7. List of Materials (continued)

QTY[1]	REF DES	DESCRIPTION	PART NUMBER	MANUF
1	J3	Header, 100 mil, 2 x 2, Gold, TH	TSW-102-07-G-D	Samtec
1	J4	Header, 100 mil, 5 x 2, Gold, TH	TSW-105-07-G-D	Samtec
4	J5, J7, J8, J9	Header, 100 mil, 2 x 1, Gold, TH	TSW-102-07-G-S	Samtec
1	J6	Header, 100mil, 3 x 1, Gold, TH	TSW-103-07-G-S	Samtec
1	J14	Terminal block, 6 A, 3.5-mm Pitch, 2-Pos, TH	ED555/2DS	On-Shore Technology
1	L1	Inductor, 65 nH, 24 A, 0.00032 ohm, SMD	59PR65-650	Vitec Corporation
4	L2, L3, L4, L5	Inductor, Ferrite, 150 nH, 41 A, 0.00029 ohm, SMD	PA2607.151NLT	Pulse Engineering
1	R1	RES, 49.9 kΩ, 1%, 0.1 W, 0603	CRCW060349K9FKEA	Vishay-Dale
2	R2, R25	RES, 150 kΩ, 1%, 0.1 W, 0603	CRCW0603150KFKEA	Vishay-Dale
2	R3, R20	RES, 20.0 kΩ, 1%, 0.1 W, 0603	CRCW060320K0FKEA	Vishay-Dale
19	R4, R28, R33, R34, R35, R36, R39, R40, R41, R49, R50, R51, R52, R55, R56, R63, R64, R66, R69	Resistor, 0 Ω, 5%, 0.1 W, 0603	MCR03EZPJ000	Rohm
1	R5	Resistor, 121 kΩ, 1%, 0.1 W, 0603	CRCW0603121KFKEA	Vishay-Dale
9	R6, R29, R30, R43, R44, R45, R46, R59, R60	Resistor, 1.00 Ω, 1%, 0.1 W, 0603	CRCW06031R00FKEA	Vishay-Dale
1	R7	Resistor, 2.55 kΩ, 1%, 0.1 W, 0603	CRCW06032K55FKEA	Vishay-Dale
2	R8, R76	Resistor, 2.00 kΩ, 1%, 0.1 W, 0603	CRCW06032K00FKEA	Vishay-Dale
1	R9	Resistor, 8.06 kΩ, 1%, 0.1 W, 0603	CRCW06038K06FKEA	Vishay-Dale
1	R10	Resistor, 26.7 kΩ, 1%, 0.1 W, 0603	CRCW060326K7FKEA	Vishay-Dale
1	R11	Resistor, 9.31 kΩ, 1%, 0.1 W, 0603	CRCW06039K31FKEA	Vishay-Dale
2	R12, R13	Resistor, 16.5 kΩ, 1%, 0.1 W, 0603	CRCW060316K5FKEA	Vishay-Dale
1	R14	Resistor, 4.32 kΩ, 1%, 0.1 W, 0603	CRCW06034K32FKEA	Vishay-Dale
1	R15	Resistor, 33.2 kΩ, 1%, 0.1 W, 0603	CRCW060333K2FKEA	Vishay-Dale
10	R16, R17, R18, R22, R23, R26, R31, R32, R47, R48	Resistor, 10.0 kΩ, 1%, 0.1 W, 0603	CRCW060310K0FKEA	Vishay-Dale
2	R19, R21	Resistor, 24.3 kΩ, 1%, 0.1 W, 0603	CRCW060324K3FKEA	Vishay-Dale
1	R24	Resistor, 39.2 kΩ, 1%, 0.1 W, 0603	CRCW060339K2FKEA	Vishay-Dale
3	R27, R42, R57	Resistor, 30.1 kΩ, 1%, 0.1 W, 0603	CRCW060330K1FKEA	Vishay-Dale
1	R58	Resistor, 51.1 kΩ, 1%, 0.1 W, 0603	CRCW060351K1FKEA	Vishay-Dale
1	R71	Resistor, 1.00 kΩ, 1%, 0.1 W, 0603	CRCW06031K00FKEA	Vishay-Dale
2	R72, R73	Resistor, 1.0 Ω, 5%, 0.125 W, 0805	CRCW08051R00JNEA	Vishay-Dale
1	R74	Resistor, 100 kΩ, 1%, 0.1 W, 0603	CRCW0603100KFKEA	Vishay-Dale
1	R75	Resistor, 15.0 kΩ, 1%, 0.1 W, 0603	CRCW060315K0FKEA	Vishay-Dale
1	S1	Switch, SPDT, Slide, On-On, 2 Pos, TH	EG1218	E-Switch
1	SH-J3	Shunt, 100 mil, Gold plated, Black	969102-0000-DA	3M
5	TP1, TP26, TP29, TP31, TP32	Test point, Miniature, Red, TH	5000	Keystone
3	TP2, TP27, TP30	Test point, Miniature, Black, TH	5001	Keystone
7	TP6, TP7, TP15, TP18, TP19, TP20, TP21	Test point, Miniature, White, TH	5002	Keystone
1	TP29	5VIN, Test Point, Miniature, Red, TH	Red Miniature Testpoint	Keystone

Copyright © 2015–2017, Texas Instruments Incorporated

Table 7. List of Materials (continued)

QTY[1]	REF DES	DESCRIPTION	PART NUMBER	MANUF
1	TP31	1_8V_LDO, Test Point, Miniature, Red, TH	Red Miniature Testpoint	Keystone
1	TP32	3_3V_LDO, Test Point, Miniature, Red, TH	Red Miniature Testpoint	Keystone
1	U1	4-Phase, D-CAP+ step-down buck controller with NVM and PMBus Interface, RHA0040B	TPS53647RHA	TI
4	U2, U3, U4, U5	Synchronous buck NexFET power stage, DQP0012A	CSD95372BQ5M	TI
1	U6	Dual output LDO, 500 mA, 2.7 V to 6 V Input, 20-pin HTSSOP (PWP)	TPS70102PWP	TI
0	C41, C42, C59, C60	Capacitor, ceramic 1000 pF, 50 V, ±5%, C0G/NP0, 0603	GRM1885C1H102JA01D	MuRata
0	C43, C62	Capacitor, aluminum polymer, 470 µF, 2.5 V, ±20%, 0.003 Ω, SMD 7.3 x 1.9 x 4.3mm SMD	EEF-GX0E471R	Panasonic
0	C66, C67, C81, C88, C89, C90, C91, C92, C93, C94	Capacitor, ceramic 100 µF, 4 V, ±20%, X5R, 1206	GRM31CR60G107ME39L	MuRata
0	FID1, FID2, FID3, FID4, FID5, FID6	Fiducial mark. There is nothing to buy or mount.	N/A	N/A
0	R37, R38, R53, R54, R67, R68	Resistor, 10.0 kΩ, 1%, 0.1 W, 0603	CRCW060310K0FKEA	Vishay-Dale
0	R61, R62, R65, R70	Resistor, 0 Ω, 5%, 0.1 W, 0603	MCR03EZPJ000	Rohm
0	TP5	Test point, Miniature, Black, TH	5001	Keystone
0	TP3, TP4, TP8, TP9, TP10, TP11, TP12, TP13, TP14, TP16, TP17, TP22, TP23, TP24, TP25, TP28	Test point, Miniature, White, TH	5002	Keystone

10 Fusion GUI

When the Fusion GUI launches, it restores user preferences and data.

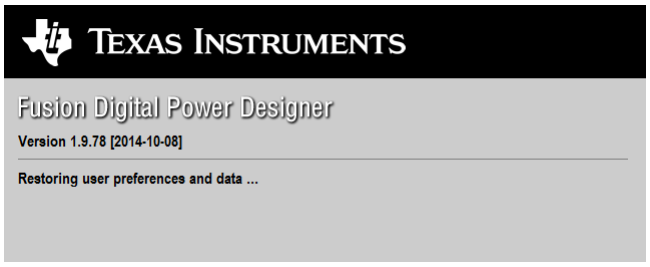

Figure 30. Launch Fusion GUI

Use the [General] configure screen as shown in Figure 31 to configure these specifications:

- VBOOT
- V_{OUT} Command
- V_{IN} UVLO
- I_{IN} OC Fault and OC Warn Limits
- I_{OUT} OC Fault and OC Warn Limits

Copyright © 2015–2017, Texas Instruments Incorporated

- OT Fault and Warn Limits
- I_{MAX}
- On/Off Config
- Margin High and Margin Low voltages
- Phase numbers

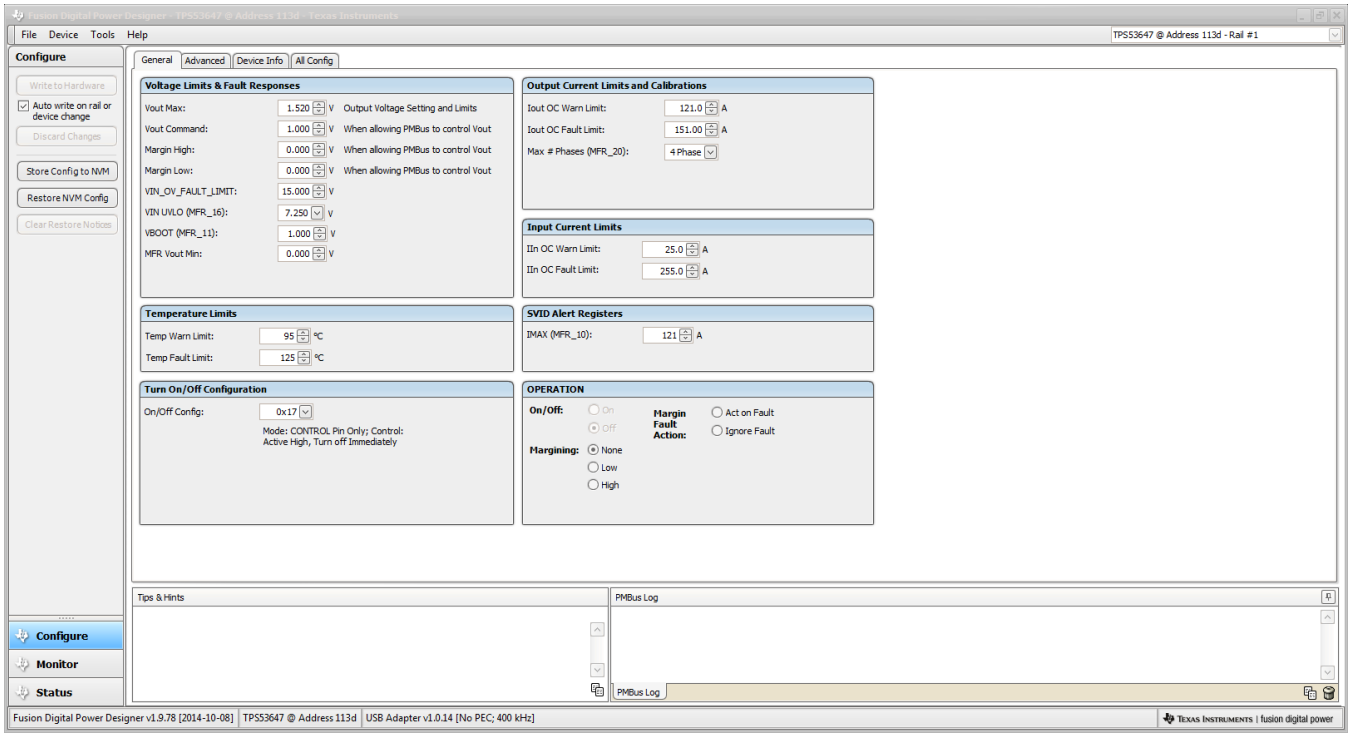

Figure 31. General Configure

Copyright © 2015–2017, Texas Instruments Incorporated

Use the [Advanced] configure screen as shown in Figure 32 to configure these specifications:

- USR and OSR
- Switching Frequency
- RAMP
- OCL
- Mode
- Phase Interleaving
- Dynamic Phase Shedding
- Slew Rate
- Load-line

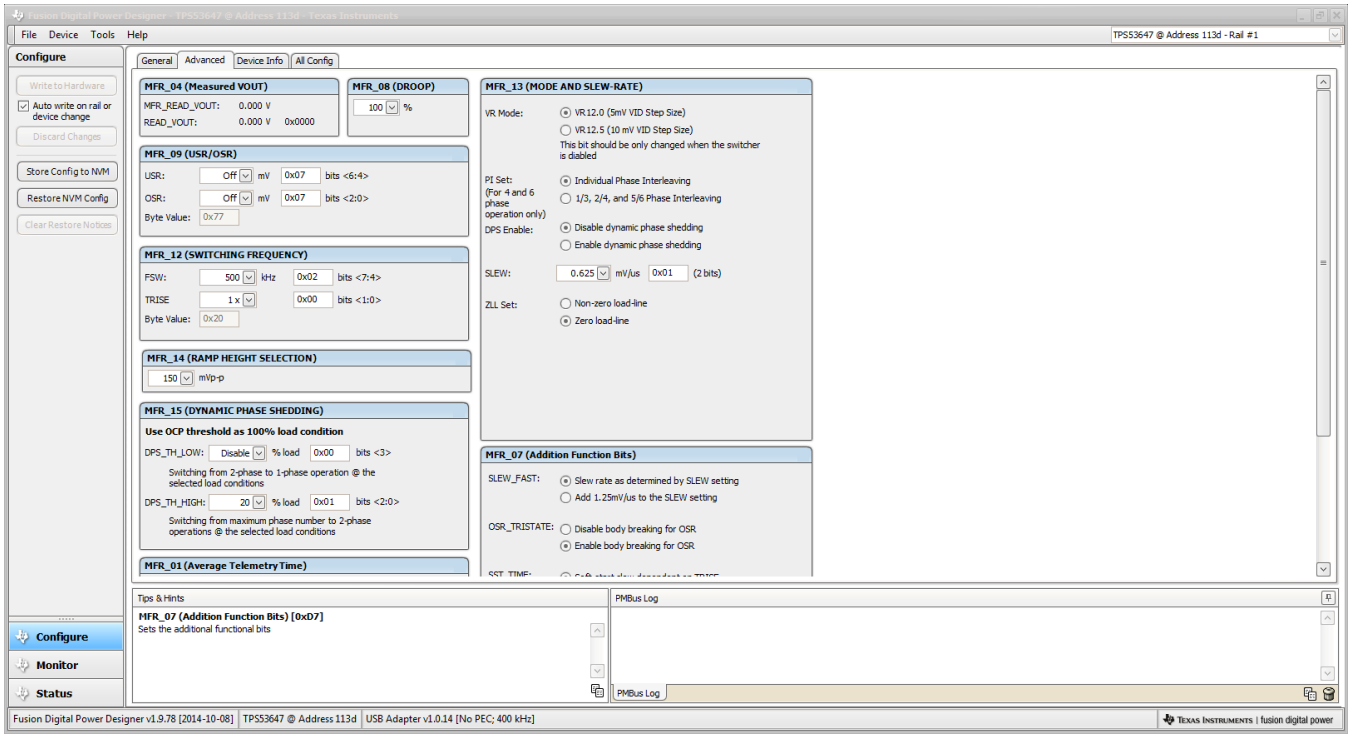

Figure 32. Advanced Configure

Copyright © 2015–2017, Texas Instruments Incorporated

Use the [All Configure] screen as shown in Figure 33 to configure all of the configurable parameters. This screen shows other details such as Hexadecimal encoding.

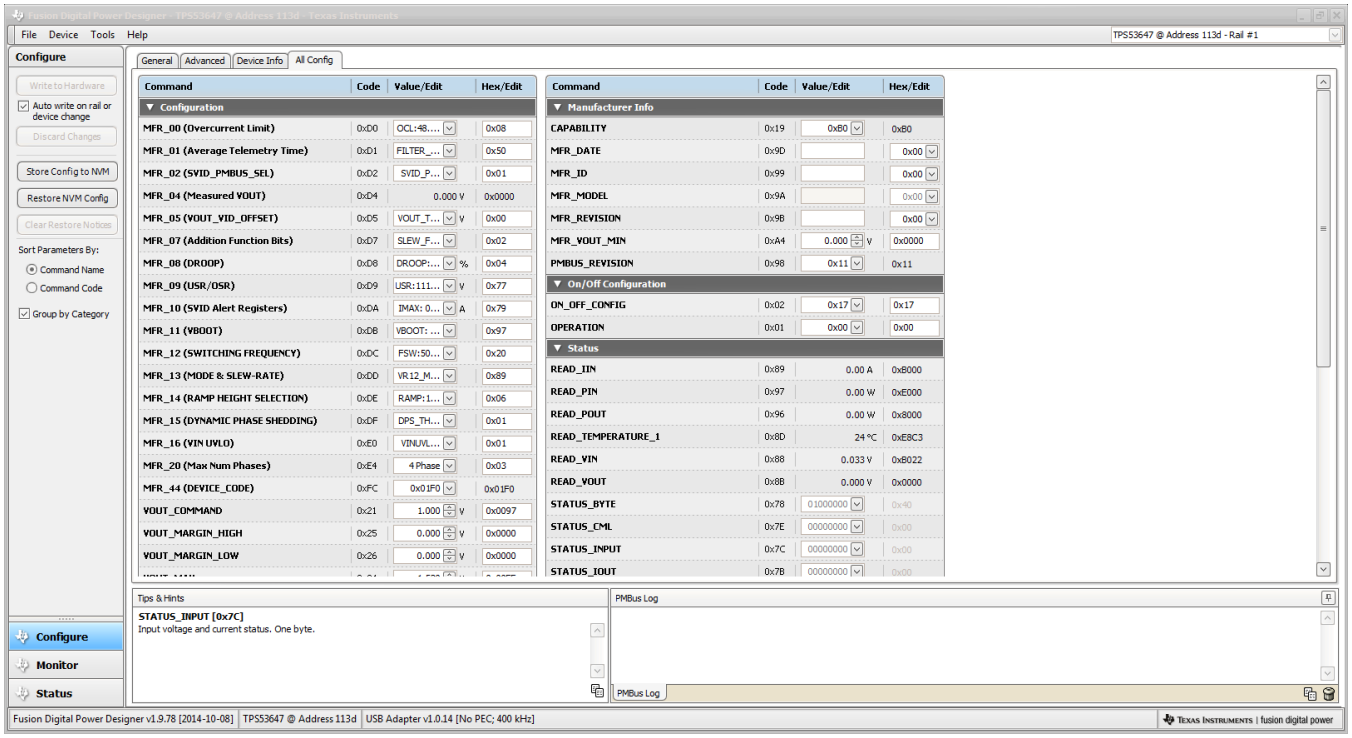

Figure 33. All Configure

Copyright © 2015–2017, Texas Instruments Incorporated

After the user selects a change, the GUI displays an orange “U” icon, offering an [Undo Change] option as shown in Figure 34. The software does not retain a change until the user selects either [Write to Hardware] or [Store Config to NVM].

When [Write to Hardware] is selected, the change is committed to volatile memory and defaults back to previous setting upon input power cycle. When the user selects [Store Config to NVM], the software commits the change to non-volatile memory and it becomes the new default.

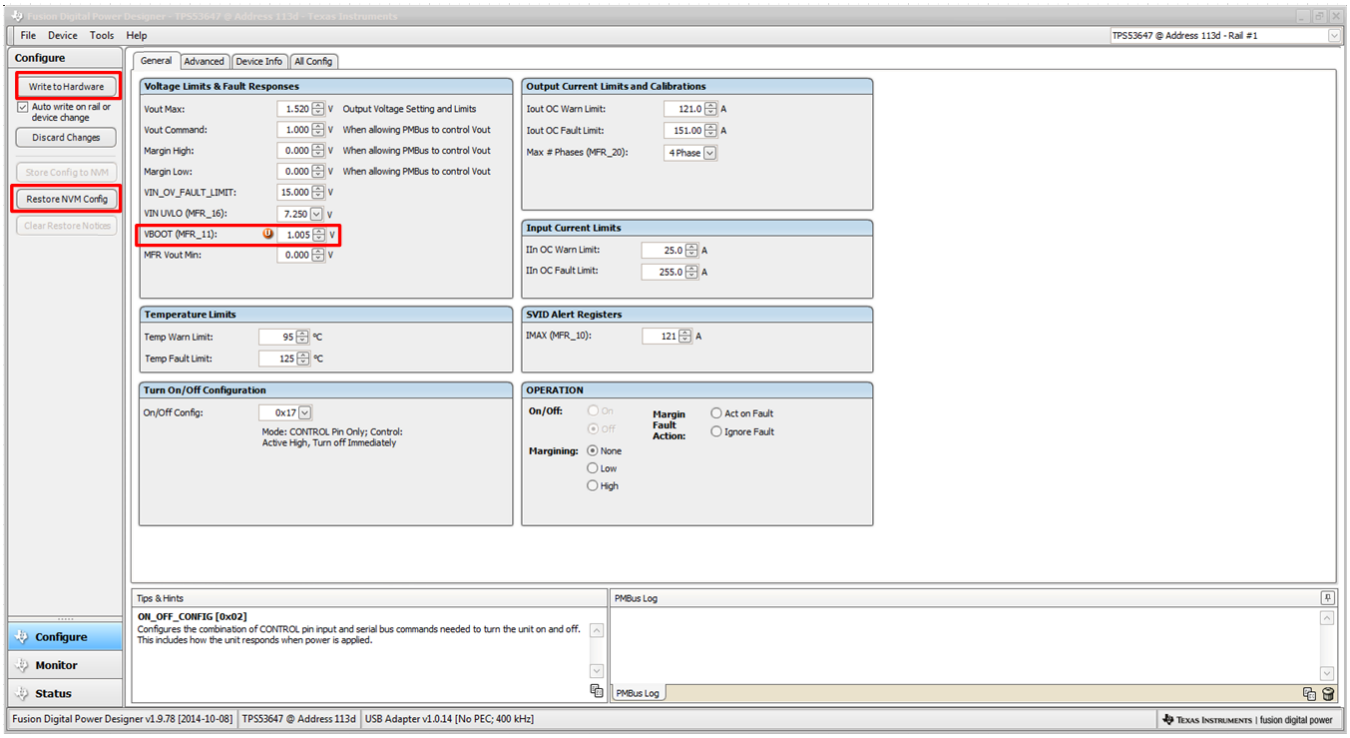

Figure 34. General Configure Pop-Up

Copyright © 2015–2017, Texas Instruments Incorporated

When user selects the [Monitor] screen (shown in Figure 35) the screen changes to display real-time data of the parameters that are measured by the controller. This screen provides access to the following parameters:

- Graphs of
  - V_{IN}
  - V_{OUT}
  - I_{OUT}
  - Temperature
- Start/Stop Polling controls ON or OFF the real-time display of data
- Quick access to ON or OFF configuration
- Control pin activation, and OPERATION command
- Margin control
- Clear Fault clears any prior fault flags

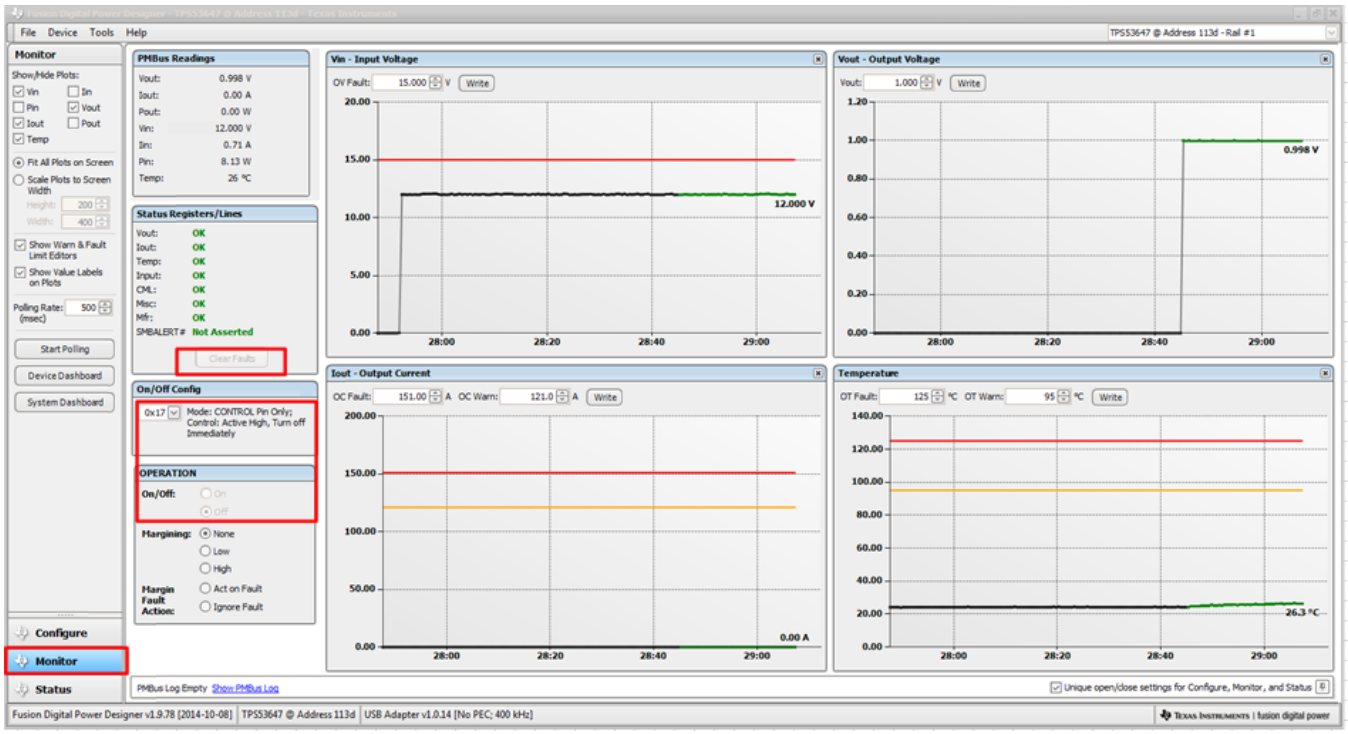

Figure 35. Monitor Screen

Copyright © 2015–2017, Texas Instruments Incorporated

Selecting [System Dashboard] from mid-left screen adds a new window which displays system level information Figure 36.

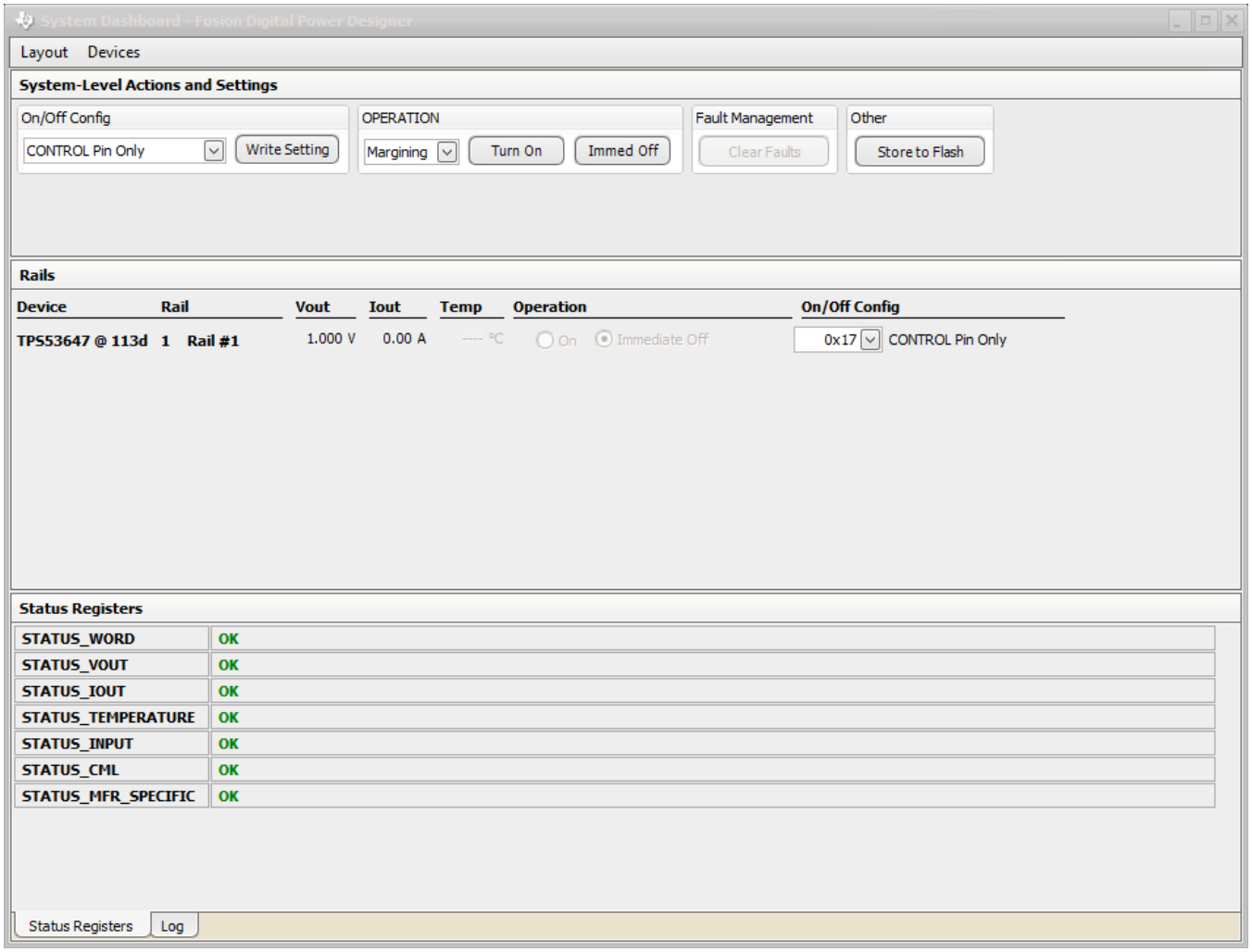

Figure 36. System Dashboard

Copyright © 2015–2017, Texas Instruments Incorporated

Selecting [Status] from lower left corner shows the status of the controller Figure 37.

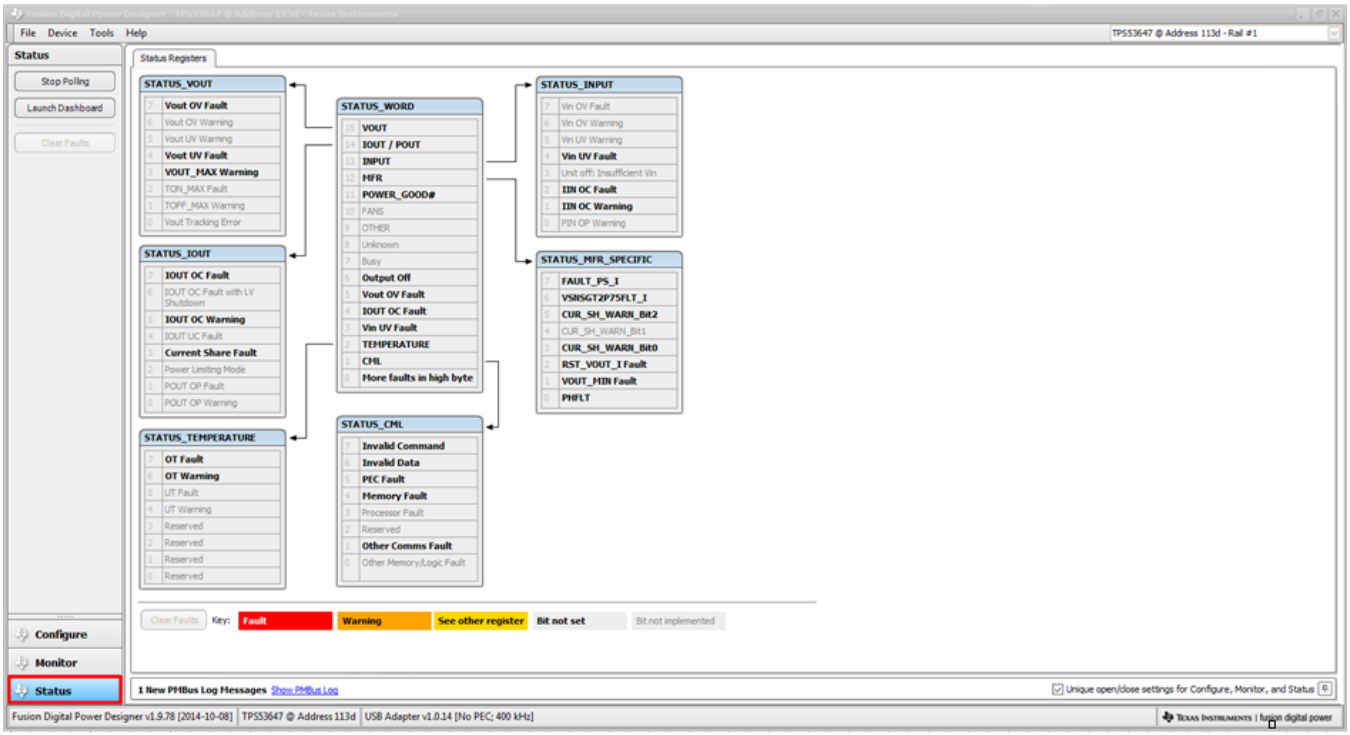

Figure 37. Status Screen

Copyright © 2015–2017, Texas Instruments Incorporated

Selecting the pull down menu [File] → [Import Project] from the upper left menu bar can be used to configure all parameters in the device at once with a desired configuration, or even revert back to a "known-good" configuration (as shown in Figure 38) . This action results in a browse-type sequence to allow the user to locate and lock the desired configure file.

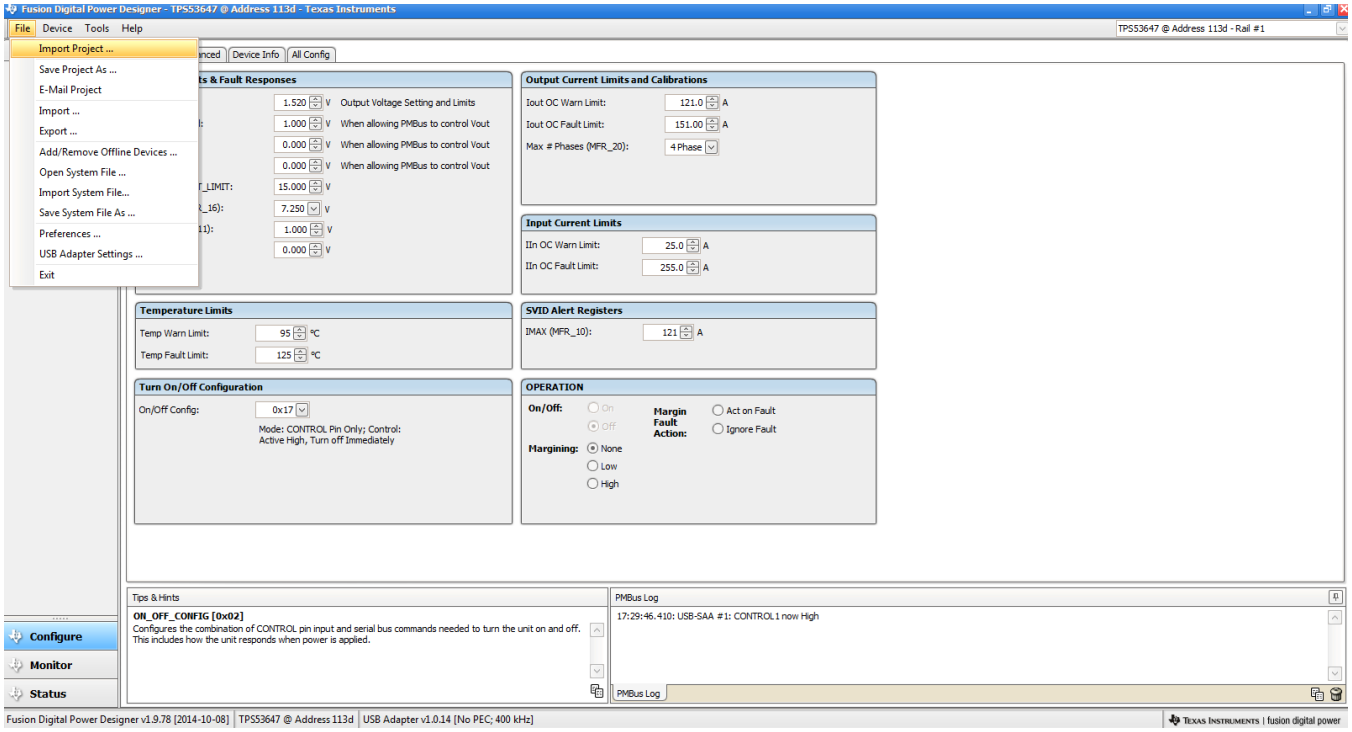

Figure 38. Import Configuration File

Copyright © 2015–2017, Texas Instruments Incorporated

Revision History

NOTE: Page numbers for previous revisions may differ from page numbers in the current version.

Changes from Original (June 2015) to A Revision **Page**

- Updated Figure 1 4
- Updated Figure 5 5
- Updated Figure 6 6
- Updated Figure 7 7
- Updated Figure 8 9
- Updated Figure 9 10
- Updated Figure 10 15
- Updated Figure 38 32

Copyright © 2015–2017, Texas Instruments Incorporated

IMPORTANT NOTICE FOR TI DESIGN INFORMATION AND RESOURCES

Texas Instruments Incorporated ('TI") technical, application or other design advice, services or information, including, but not limited to, reference designs and materials relating to evaluation modules, (collectively, "TI Resources") are intended to assist designers who are developing applications that incorporate TI products; by downloading, accessing or using any particular TI Resource in any way, you (individually or, if you are acting on behalf of a company, your company) agree to use it solely for this purpose and subject to the terms of this Notice.

TI's provision of TI Resources does not expand or otherwise alter TI's applicable published warranties or warranty disclaimers for TI products, and no additional obligations or liabilities arise from TI providing such TI Resources. TI reserves the right to make corrections, enhancements, improvements and other changes to its TI Resources.

You understand and agree that you remain responsible for using your independent analysis, evaluation and judgment in designing your applications and that you have full and exclusive responsibility to assure the safety of your applications and compliance of your applications (and of all TI products used in or for your applications) with all applicable regulations, laws and other applicable requirements. You represent that, with respect to your applications, you have all the necessary expertise to create and implement safeguards that (1) anticipate dangerous consequences of failures, (2) monitor failures and their consequences, and (3) lessen the likelihood of failures that might cause harm and take appropriate actions. You agree that prior to using or distributing any applications that include TI products, you will thoroughly test such applications and the functionality of such TI products as used in such applications. TI has not conducted any testing other than that specifically described in the published documentation for a particular TI Resource.

You are authorized to use, copy and modify any individual TI Resource only in connection with the development of applications that include the TI product(s) identified in such TI Resource. NO OTHER LICENSE, EXPRESS OR IMPLIED, BY ESTOPPEL OR OTHERWISE TO ANY OTHER TI INTELLECTUAL PROPERTY RIGHT, AND NO LICENSE TO ANY TECHNOLOGY OR INTELLECTUAL PROPERTY RIGHT OF TI OR ANY THIRD PARTY IS GRANTED HEREIN, including but not limited to any patent right, copyright, mask work right, or other intellectual property right relating to any combination, machine, or process in which TI products or services are used. Information regarding or referencing third-party products or services does not constitute a license to use such products or services, or a warranty or endorsement thereof. Use of TI Resources may require a license from a third party under the patents or other intellectual property of the third party, or a license from TI under the patents or other intellectual property of TI.

TI RESOURCES ARE PROVIDED "AS IS" AND WITH ALL FAULTS. TI DISCLAIMS ALL OTHER WARRANTIES OR REPRESENTATIONS, EXPRESS OR IMPLIED, REGARDING TI RESOURCES OR USE THEREOF, INCLUDING BUT NOT LIMITED TO ACCURACY OR COMPLETENESS, TITLE, ANY EPIDEMIC FAILURE WARRANTY AND ANY IMPLIED WARRANTIES OF MERCHANTABILITY, FITNESS FOR A PARTICULAR PURPOSE, AND NON-INFRINGEMENT OF ANY THIRD PARTY INTELLECTUAL PROPERTY RIGHTS.

TI SHALL NOT BE LIABLE FOR AND SHALL NOT DEFEND OR INDEMNIFY YOU AGAINST ANY CLAIM, INCLUDING BUT NOT LIMITED TO ANY INFRINGEMENT CLAIM THAT RELATES TO OR IS BASED ON ANY COMBINATION OF PRODUCTS EVEN IF DESCRIBED IN TI RESOURCES OR OTHERWISE. IN NO EVENT SHALL TI BE LIABLE FOR ANY ACTUAL, DIRECT, SPECIAL, COLLATERAL, INDIRECT, PUNITIVE, INCIDENTAL, CONSEQUENTIAL OR EXEMPLARY DAMAGES IN CONNECTION WITH OR ARISING OUT OF TI RESOURCES OR USE THEREOF, AND REGARDLESS OF WHETHER TI HAS BEEN ADVISED OF THE POSSIBILITY OF SUCH DAMAGES.

You agree to fully indemnify TI and its representatives against any damages, costs, losses, and/or liabilities arising out of your non-compliance with the terms and provisions of this Notice.

This Notice applies to TI Resources. Additional terms apply to the use and purchase of certain types of materials, TI products and services. These include; without limitation, TI's standard terms for semiconductor products http://www.ti.com/sc/docs/stdterms.htm), evaluation modules, and samples (http://www.ti.com/sc/docs/sampterms.htm).

Mailing Address: Texas Instruments, Post Office Box 655303, Dallas, Texas 75265
Copyright © 2017, Texas Instruments Incorporated