TEXAS INSTRUMENTS

1-MHz, 3.3-V, High-Efficiency Synchronous Buck Converter With TPS43000 PWM Controller

User's Guide

EVM IMPORTANT NOTICE

Texas Instruments (TI) provides the enclosed product(s) under the following conditions:

This evaluation kit being sold by TI is intended for use for **ENGINEERING DEVELOPMENT OR EVALUATION PURPOSES ONLY** and is not considered by TI to be fit for commercial use. As such, the goods being provided may not be complete in terms of required design-, marketing-, and/or manufacturing-related protective considerations, including product safety measures typically found in the end product incorporating the goods. As a prototype, this product does not fall within the scope of the European Union directive on electromagnetic compatibility and therefore may not meet the technical requirements of the directive.

Should this evaluation kit not meet the specifications indicated in the EVM User's Guide, the kit may be returned within 30 days from the date of delivery for a full refund. THE FOREGOING WARRANTY IS THE EXCLUSIVE WARRANTY MADE BY SELLER TO BUYER AND IS IN LIEU OF ALL OTHER WARRANTIES, EXPRESSED, IMPLIED, OR STATUTORY, INCLUDING ANY WARRANTY OF MERCHANTABILITY OR FITNESS FOR ANY PARTICULAR PURPOSE.

The user assumes all responsibility and liability for proper and safe handling of the goods. Further, the user indemnifies TI from all claims arising from the handling or use of the goods. Please be aware that the products received may not be regulatory compliant or agency certified (FCC, UL, CE, etc.). Due to the open construction of the product, it is the user's responsibility to take any and all appropriate precautions with regard to electrostatic discharge.

EXCEPT TO THE EXTENT OF THE INDEMNITY SET FORTH ABOVE, NEITHER PARTY SHALL BE LIABLE TO THE OTHER FOR ANY INDIRECT, SPECIAL, INCIDENTAL, OR CONSEQUENTIAL DAMAGES.

TI currently deals with a variety of customers for products, and therefore our arrangement with the user **is not exclusive**.

TI assumes **no liability for applications assistance, customer product design, software performance, or infringement of patents or services described herein**.

Please read the EVM User's Guide and, specifically, the EVM Warnings and Restrictions notice in the EVM User's Guide prior to handling the product. This notice contains important safety information about temperatures and voltages. For further safety concerns, please contact the TI application engineer.

Persons handling the product must have electronics training and observe good laboratory practice standards.

No license is granted under any patent right or other intellectual property right of TI covering or relating to any machine, process, or combination in which such TI products or services might be or are used.

Mailing Address:

Texas Instruments
Post Office Box 655303
Dallas, Texas 75265

Copyright © 2002, Texas Instruments Incorporated

DYNAMIC WARNINGS AND RESTRICTIONS

It is important to operate this EVM within the input voltage range of 3.3 Vdc to 9.0 Vdc and the output of 3.3 V ± 5%.

Exceeding the specified input range may cause unexpected operation and/or irreversible damage to the EVM. If there are questions concerning the input range, please contact a TI field representative prior to connecting the input power.

Applying loads outside of the specified output range may result in unintended operation and/or possible permanent damage to the EVM. Please consult the EVM User's Guide prior to connecting any load to the EVM output. If there is uncertainty as to the load specification, please contact a TI field representative.

During normal operation, some circuit components may have case temperatures greater than 50°C. The EVM is designed to operate properly with certain components above 50°C as long as the input and output ranges are maintained. These components include but are not limited to linear regulators, switching transistors, pass transistors, and current sense resistors. These types of devices can be identified using the EVM schematic located in the EVM User's Guide. When placing measurement probes near these devices during operation, please be aware that these devices may be very warm to the touch.

Mailing Address:

Texas Instruments
Post Office Box 655303
Dallas, Texas 75265

Copyright © 2002, Texas Instruments Incorporated

1-MHz, 3.3-V, High-Efficiency Synchronous Buck Converter With TPS43000 PWM Controller

Systems Power

Contents

1 Introduction 1
2 Design Procedure 2
3 Test Results 9
4 PCB Layout 10
5 List of Materials 12

1 Introduction

This full-featured controller is designed to drive a pair of external MOSFETs (N or P) and can be used with a wide range of output voltages and power levels. It can be widely used in networking equipment, servers, PDAs, cellular phones, and telecommunication applications. The datasheet describes the functionalities of the controller in more detail.

A schematic of this board is shown in Figure 1. Recommended parts list is provided in Table 1. The layout of the PCB board is shown in Figure 6.

The specification for this board is as follows:

- 4.5 V $\leq V_{IN} \leq$ 8.5 V
- V_{OUT} = 3.3 V
- 50 mA $\leq I_{OUT} \leq$ 2 A, enters PFM at 200 mA, nominal current is 1 A
- Switching frequency, f_S = 1 MHz
- Ripple = 1%
- Efficiency at nominal load > 90%

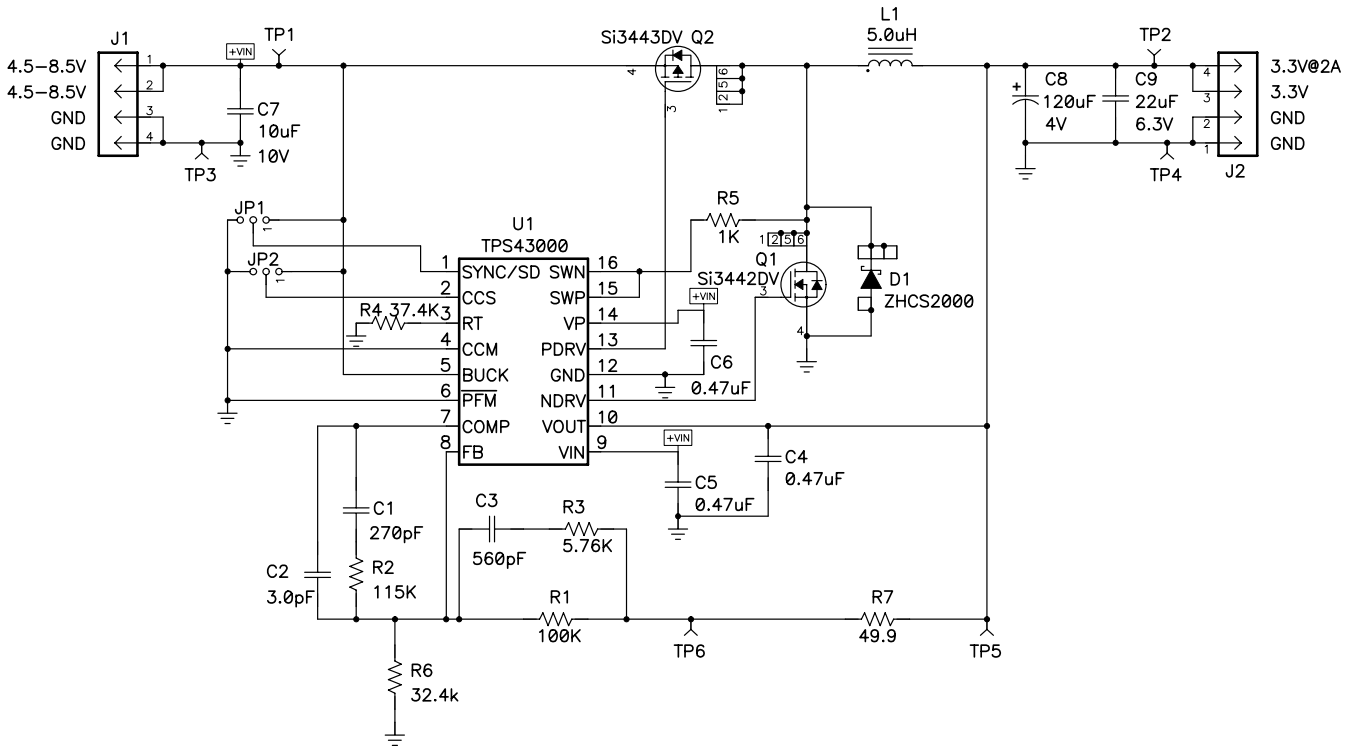

Figure 1. TPS43000–001EVM Schematic

2 Design Procedure

2.1 Frequency Setting

The TPS43000 can operate either in constant frequency, or in an automatic PFM mode. In the automatic PFM mode, the gate driver turns off when the inductor current goes discontinuous, and turns on when the output voltage has fallen by 2%. This pulse skipping can decrease gate-drive losses and significantly improve the efficiency at light load. (Refer to the TPS43000 Data Sheet, TI Literature No. SLUS489 for more information.)The converter is designed to operate at fixed 1 MHz above 0.2 A. The PFM mode is used when the load decreases to below 0.2 A.

A resistor, R4, connected from the RT pin to ground, programs the oscillator frequency. The approximate operating frequency is calculated in equation (1).

$$f\,(\text{MHz}) = \frac{38}{\text{R4}\ (\text{k}\Omega)} \tag{1}$$

R4 = 37.4 kΩ is chosen for 1-MHz operation.

2.2 Inductance Value

The inductance value can be calculated as shown in equation (2).

$$L_{(min)} = \frac{V_{OUT}}{f \times I_{RIPPLE}} \times \left(1 - \frac{V_{OUT}}{V_{IN(max)}}\right) \quad (2)$$

I_{RIPPLE} is the ripple current flowing through the inductor, which affects the output voltage ripple and core losses. According to the specification, the converter enters PFM mode at 200 mA, so the desired ripple current it 0.4 A. Based on this and the 1-MHz operating frequency, the inductance value is calculated at 5.0 μH.

2.3 Input and Output Capacitors

The output capacitance and required ESR can be calculated by equations (3) and (4).

$$C_{OUTPUT\ (min)} = \frac{I_{RIPPLE}}{8 \times f \times V_{RIPPLE}} \quad (3)$$

$$ESR_{OUT} = \frac{V_{RIPPLE}}{I_{RIPPLE}} \quad (4)$$

With 1% output voltage ripple, the capacitance required is at least 1.5 μF and its ESR should be less than 81.7 mΩ. A Panasonic 4-V, 120-μF capacitor is chosen with an ESR of 18 mΩ.

The required input capacitance is calculated in equation (5). The calculated value is approximately 10 μF. A 10-μF ceramic capacitor is used in order to handle the ripple current.

$$C_{IN\ (min)} = I_{OUT\ (max)} \times D_{max)} \times \frac{T_S}{V_{IN\ (ripple)}} \quad (5)$$

2.4 Compensation Design

The TPS43000 uses voltage-mode control. R1, R2, and R3 along with C1, C2 and C3, form a Type III compensator network. The L-C frequency of the power stage, f_C is approximately 6.5 kHz and the ESR zero is around 73.7 kHz, as shown in Figure 2. The overall crossover frequency, f_{0db} , is chosen at 50 kHz for reasonable transient response and stability. The two zeros, f_{Z1} and f_{Z2} from the compensator are set at 0.5 f_C and f_C separately. The two poles f_{P1} and f_{P2} are set at ESR zero and 0.5 f. The frequency of poles and zeros are defined by the following equations:

$$f_{Z1} = \frac{1}{2\pi \times R2 \times C1}$$

$$f_{Z2} \approx \frac{1}{2\pi \times R1 \times C3} \quad \text{assuming } R1 \gg R3$$

$$f_{P1} = \frac{1}{2\pi \times R3 \times C3}$$

$$f_{P2} \approx \frac{1}{2\pi \times R2 \times C2} \quad \text{assuming } C1 \gg C2$$

The transfer function for the compensator is calculated as:

$$A(s) = \frac{(1 + s \times C1 \times R2) \times (1 + s \times C3 \times (R1 + R3))}{s \times R1 \times C1 \times \left(1 + \left(\frac{C2}{C1}\right) + s \times C2 \times R2\right) \times (1 + s \times C3 \times R3)}$$

The compensator values are calculated as:

C1 = 270 pF, C2 = 3.0 pF, C3 = 560 pF, R1 = 100 kΩ, R2 = 115 kΩ, and R3 = 5.76 kΩ.

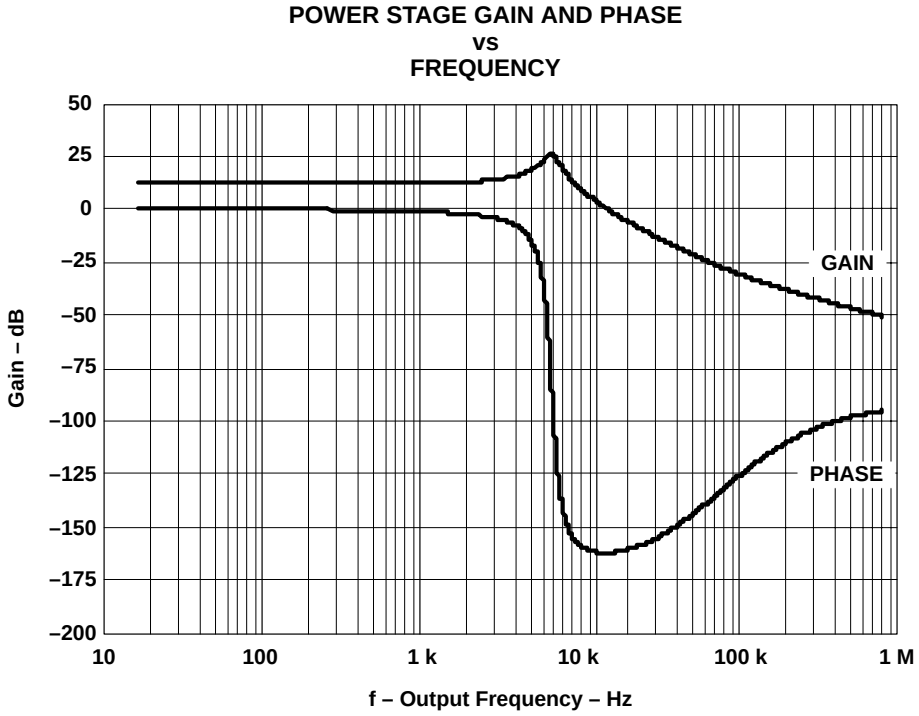

Figure 2.

2.5 MOSFETs and Diode

For a 3.3-V output voltage, the lower the $R_{DS(on)}$ of the MOSFET, the higher the efficiency. Also, considering the 1-MHz switching frequency, Si3442DV ($R_{DS(on)}$ = 65 mΩ) and Si3443DV ($R_{DS(on)}$ = 70 mΩ) are chosen for fast switching speed.

2.6 Current Limiting

Two types of current limiting can be selected from the controller. Detailed information is available in the datasheet (TI Literature No. SLUS489). A jumper, JP2, is used to choose different current limiting. By tying the CCS pin to VIN, the controller enters pulse-by-pulse current limiting and the current-limiting threshold is calculated by equation (6):

$$I_{MAX\,(p-p)} = \frac{150\ mV}{R_{DS(on)}} \tag{6}$$

in which $R_{DS(on)}$ is the on-resistance of Q2. In this design, the threshold is approximately 2.3 A. This value may change with temperature.

By tying the CCS pin to ground, the controller enters hiccup-mode overcurrent limiting . The current-limiting threshold is calculated in equation (7). The threshold in this case is approximately 3.8 A. This value may change with temperature.

$$I_{MAX\,(hu)} = \frac{250\ mV}{R_{DS(on)}} \tag{7}$$

2.7 Voltage Sense Resistor

R1 and R6 operate as the output voltage divider. The internal reference voltage is 0.8 V. The relationship between the output voltage and divider is described in equation (8).

$$\frac{V_{REF}}{R6} = \frac{V_{OUT}}{R1 + R6} \tag{8}$$

With an R1 value of 100 kΩ and 3.3-V voltage regulation, R6 is calculated at 32.4 kΩ.

3 Test Results

3.1 Efficiency Curves

Efficiency tested at different loads and input voltages is shown in Figure 4. The maximum efficiency is as high as 94% at 0.5 A output. The light-load efficiency is improved due to the PFM operation mode.

3.2 Typical Operation Waveform

Typical operating waveforms are shown in Figure 5 with V_{IN} = 4.5 V and I_{OUT} = 2 A.

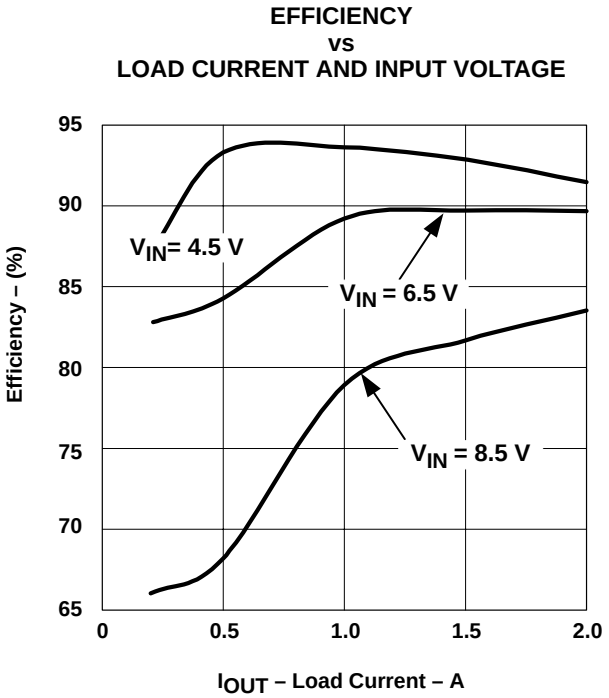

Figure 3.

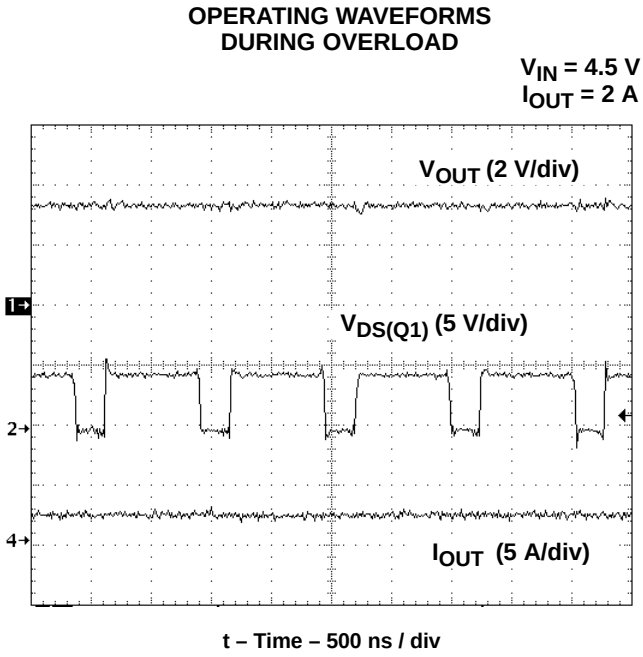

Figure 4.

3.3 Output Ripple Voltage and Transient Response

The output ripple is approximately 28.8 mV peak-to-peak with a 1.5 A output and is shown in Figure 4. Figure 5 shows load changes from 0.5 A to 1.5 A, where the overshooting voltage is approximately 10 mV.

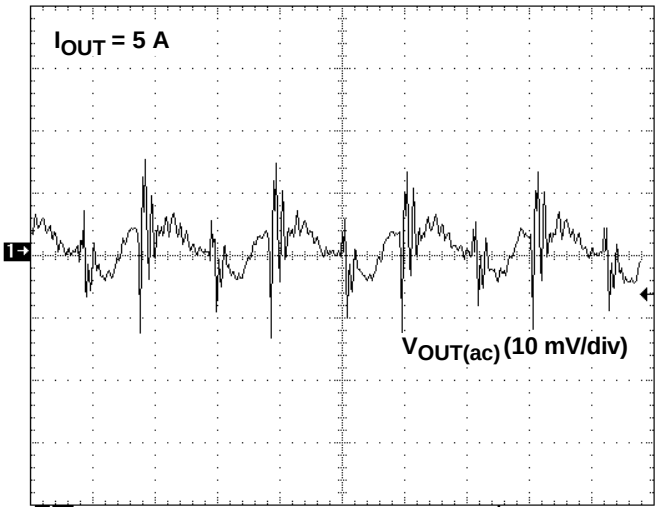

Figure 5. Output Ripple

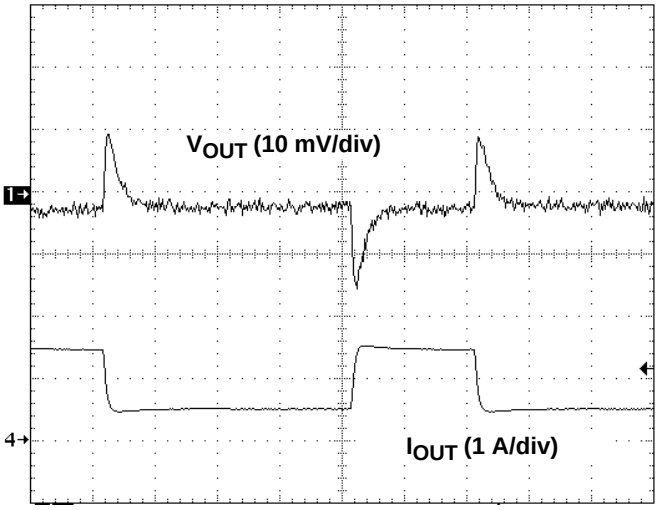

Figure 6. Transient Response

4 PCB Layout

Figures 7 through 9 show the PCB layout . All components are on the top side of the board. The bottom side of the board is the ground plane.

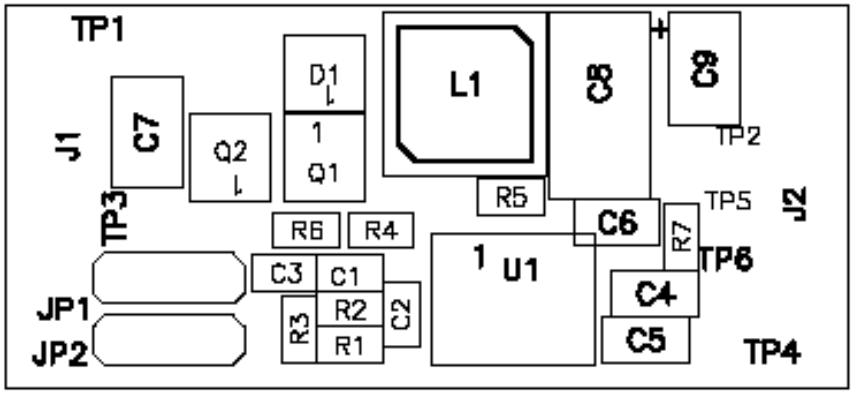

Figure 7. Parts Placement

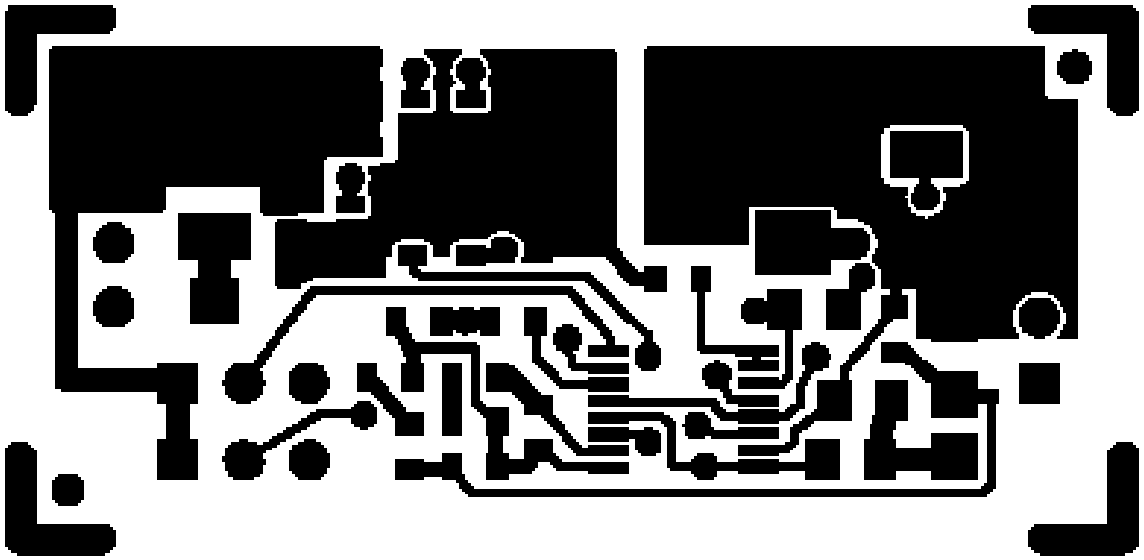

Figure 8. Top Layer

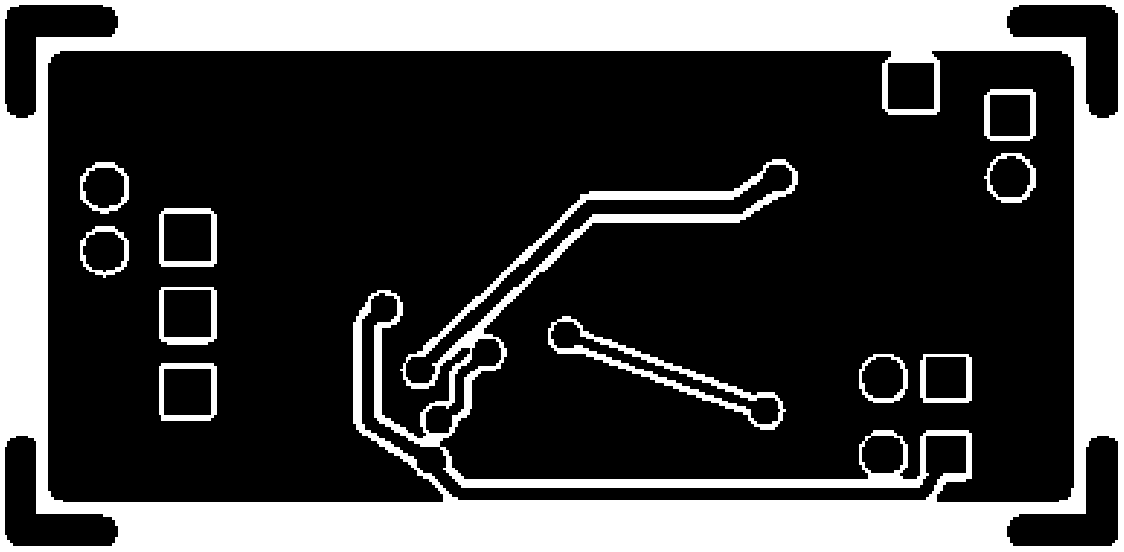

Figure 9. Bottom Layer

5 Bill of Materials

Table 1 lists the board components and their values, which can be modified to meet the application requirements.

. List of Materials

REFERENCE DESIGNATOR	QTY	PART NUMBER	DESCRIPTION	MFG	SIZE
C1	1	GRM1885C1H271J K	Capacitor, ceramic, 270 pF, 50 V, COG, 5%	Murata	603
C2	1	GRM1885C1H3R0J K	Capacitor, ceramic, 3 pF, 50 V, COG, 5%	Murata	603
C3	1	GRM188R71H561J K	Capacitor, ceramic, 560 pF, 50 V, 5%	Murata	603
C4,C5,C6	3	GRM219R71C474K K	Capacitor, ceramic, 0.47 μF, 16 V, X7R, 10%	Murata	805
C7	1	LMK325BJ106MN	Capacitor, ceramic, 10 μF, 10 V, 20%	Taiyo-Yuden	1210
C9	1	JMK325BJ226MM	Capacitor, ceramic, 22 μF, 6.3 V, 20%	Taiyo-Yuden	1210
C8	1	EEFUD0D121R	Capacitor, 120 μF, 4.0 V, 18 mΩ, 20%	Panasonic	7343 (D)
D1	1	ZHCS2000	Diode, schottky, 2 A, 40 V	Zetex	SOT23–6
J1,J2	2	PTC36SAAN	Header, 4-pin, 100 mil spacing, (36-pin strip)	Sullins	0.100 x 4”
L1	1	U2PB–3R3	Inductor, SMT, 5.0 μH, 2.9 A, 24 mΩ	Sumida	6.7 X 6.7 mm
R1	1	Std	Resistor, chip, 100 kΩ, 1/16-W, 1%	Std	603
R2	1	Std	Resistor, chip, 115 kΩ, 1/16-W, 1%	Std	603
R3	1	Std	Resistor, chip, 5.76 kΩ, 1/16–W, 1%	Std	603
R4	1	Std	Resistor, chip, 37.4 kΩ, 1/16-W, 1%	Std	603
R5	1	Std	Resistor, chip, 1 kΩ, 1/16-W, 1%	Std	603
R6	1	Std	Resistor, chip, 32.4 kΩ, 1/16-W, 1%	Std	603
R7	1	Std	Resistor, chip, 49.9 kΩ, 1/16-W, 1%	Std	603
Q1†	1	Si3442DV	MOSFET, N–channel, 2.5-V_{GS}, 4 A, 70 mΩ	Siliconix	TSOP–6
Q2†	1	Si3443DV	MOSFET, P-channel, 2.5-V_{GS}, 4.4 A, 90 mΩ	Siliconix	TSOP–6
U1†	1	TPS43000PW	Multi–topology high-frequency PWM controller	Texas Instruments	TSSOP–16
TP1,TP2,TP5	3	240–333	Test point, red, 1 mm	Farnell	0.038”
TP3,TP4,TP6	3	240–333	Test point, black, 1 mm	Farnell	0.038”
N/A	1	SLVP217	Printed circuit board, FR4, 0.032, SMOBC	any	

† Components can not be substituted.

IMPORTANT NOTICE

Texas Instruments Incorporated and its subsidiaries (TI) reserve the right to make corrections, modifications, enhancements, improvements, and other changes to its products and services at any time and to discontinue any product or service without notice. Customers should obtain the latest relevant information before placing orders and should verify that such information is current and complete. All products are sold subject to TI's terms and conditions of sale supplied at the time of order acknowledgment.

TI warrants performance of its hardware products to the specifications applicable at the time of sale in accordance with TI's standard warranty. Testing and other quality control techniques are used to the extent TI deems necessary to support this warranty. Except where mandated by government requirements, testing of all parameters of each product is not necessarily performed.

TI assumes no liability for applications assistance or customer product design. Customers are responsible for their products and applications using TI components. To minimize the risks associated with customer products and applications, customers should provide adequate design and operating safeguards.

TI does not warrant or represent that any license, either express or implied, is granted under any TI patent right, copyright, mask work right, or other TI intellectual property right relating to any combination, machine, or process in which TI products or services are used. Information published by TI regarding third–party products or services does not constitute a license from TI to use such products or services or a warranty or endorsement thereof. Use of such information may require a license from a third party under the patents or other intellectual property of the third party, or a license from TI under the patents or other intellectual property of TI.

Reproduction of information in TI data books or data sheets is permissible only if reproduction is without alteration and is accompanied by all associated warranties, conditions, limitations, and notices. Reproduction of this information with alteration is an unfair and deceptive business practice. TI is not responsible or liable for such altered documentation.

Resale of TI products or services with statements different from or beyond the parameters stated by TI for that product or service voids all express and any implied warranties for the associated TI product or service and is an unfair and deceptive business practice. TI is not responsible or liable for any such statements.

Mailing Address:

Texas Instruments
Post Office Box 655303
Dallas, Texas 75265

Copyright © 2002, Texas Instruments Incorporated