TPS3850 Precision Voltage Supervisor with Programmable Window Watchdog Timer

1 Features

- 0.8% Voltage Threshold Accuracy
- Precision Over- and Undervoltage Monitoring:
  - Supports Common Rails from 0.9 V to 5.0 V
  - ±4% and ±7% Fault Windows Available
  - 0.5% Hysteresis
- Factory-Programmed Precision Watchdog and Reset Timers:
  - ±15% Accurate WDT and RST Delays
- Watchdog Disable Feature
- User-Programmable Watchdog Timeout
- User-Programmable Reset Delay
- Input Voltage Range: VDD = 1.6 V to 6.5 V
- Low Supply Current: I_{DD} = 10 µA (typ)
- Open-Drain Outputs
- Available in a Small 3-mm × 3-mm, 10-Pin VSON Package
- Junction Operating Temperature Range: –40°C to +125°C

2 Applications

- Safety Critical Applications
- Telematics Control Units
- FPGA and ASIC Applications
- Embedded Controllers
- Microcontroller and DSP Applications
- Video Surveillance

Fully Integrated Microcontroller Supervisory Circuit

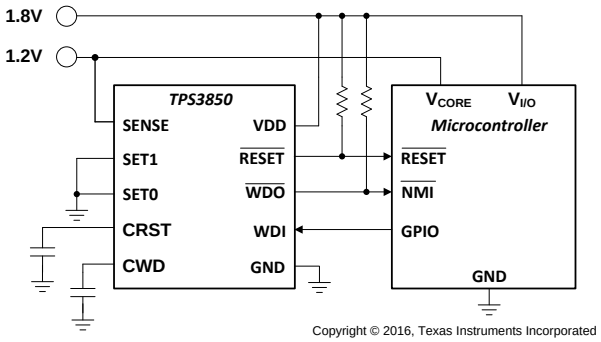

Copyright © 2016, Texas Instruments Incorporated

3 Description

The TPS3850 combines a precision voltage supervisor with a programmable window watchdog timer. The TPS3850 window comparator achieves 0.8% accuracy (–40°C to +125°C) for both overvoltage ($V_{IT+(OV)}$) and undervoltage ($V_{IT–(UV)}$) thresholds. The TPS3850 also includes accurate hysteresis on both thresholds, making the device ideal for use with tight tolerance systems. The supervisor RESET delay can be set by factory-programmed default delay settings, or programmed by an external capacitor. The factory-programmed RESET delay features a 15% accuracy, high-precision delay timing.

The TPS3850 includes a programmable window watchdog timer for a wide variety of applications. The dedicated watchdog output (WDO) enables increased resolution to help determine the nature of fault conditions. The window watchdog timeouts can be set by factory-programmed default delay settings, or programmed by an external capacitor. The watchdog can be disabled via logic pins to avoid undesired watchdog timeouts during the development process.

The TPS3850 is available in a small 3.00-mm × 3.00-mm, 10-pin VSON package.

Device Information(1)

PART NUMBER	PACKAGE	BODY SIZE (NOM)
TPS3850	VSON (10)	3.00 mm × 3.00 mm

(1) For all available packages, see the orderable addendum at the end of the data sheet.

Overvoltage Threshold ($V_{IT+(OV)}$) Accuracy vs Temperature

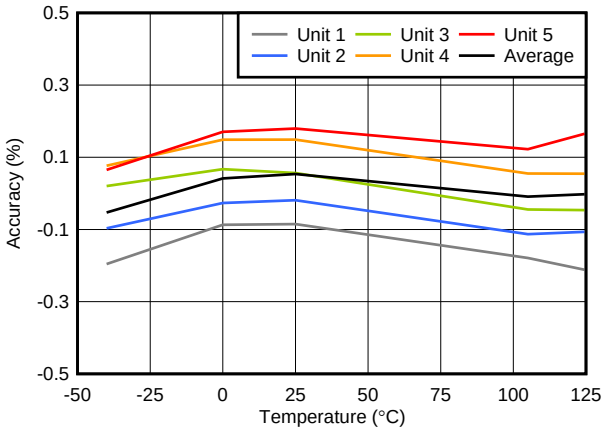

An IMPORTANT NOTICE at the end of this data sheet addresses availability, warranty, changes, use in safety-critical applications, intellectual property matters and other important disclaimers. PRODUCTION DATA.

Table of Contents

1 Features ... 1
2 Applications ... 1
3 Description ... 1
4 Revision History ... 2
5 Pin Configuration and Functions ... 3
6 Specifications ... 4
6.1 Absolute Maximum Ratings ... 4
6.2 ESD Ratings ... 4
6.3 Recommended Operating Conditions ... 4
6.4 Thermal Information ... 5
6.5 Electrical Characteristics ... 5
6.6 Timing Requirements ... 6
6.7 Typical Characteristics ... 10
7 Detailed Description ... 13
7.1 Overview ... 13
7.2 Functional Block Diagram ... 13
7.3 Feature Description ... 14
7.4 Device Functional Modes ... 20
8 Application and Implementation ... 21
8.1 Application Information ... 21
8.2 Typical Applications ... 26
9 Power Supply Recommendations ... 32
10 Layout ... 32
10.1 Layout Guidelines ... 32
10.2 Layout Example ... 32
11 Device and Documentation Support ... 33
11.1 Device Support ... 33
11.2 Documentation Support ... 33
11.3 Receiving Notification of Documentation Updates 33
11.4 Community Resources ... 33
11.5 Trademarks ... 33
11.6 Electrostatic Discharge Caution ... 34
11.7 Glossary ... 34
12 Mechanical, Packaging, and Orderable Information ... 34

4 Revision History

NOTE: Page numbers for previous revisions may differ from page numbers in the current version.

Changes from Original (October 2016) to Revision A	Page
• Changed units in I_{SENSE} parameter and footnote 1 in *Electrical Characteristics* table	5
• Added correct operation state to Figure 2	8
• Changed Figure 3 so the SET pins do not bring the watchdog into the disabled state before going to the 1:2 ratio	9
• Changed Figure 11 so it no longer has VDD and V_{SENSE} tied together	11
• Changed Figure 26 so it no longer goes through watchdog disabled	17
• Added correct operation state to Figure 27	18
• Changed $\overline{\text{RESET}}$ to $\overline{\text{WDO}}$ in description of $\overline{\text{WDO}}$ assertion in *$\overline{\text{WDO}}$ Functionality* section	19

Copyright © 2016, Texas Instruments Incorporated

5 Pin Configuration and Functions

DRC Package: TPS3850
3-mm × 3-mm VSON-10
Top View

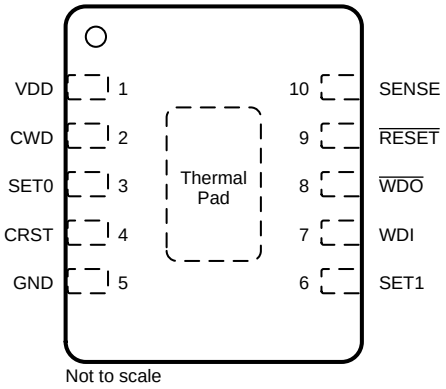

Not to scale

Pin Functions

PIN			DESCRIPTION
NAME	NO.	I/O	
CRST	4	I	Programmable reset timeout pin. Connect a capacitor between this pin and GND to program the reset timeout period. This pin can also be connected by a 10-kΩ pullup resistor to VDD, or left unconnected (NC) for various factory programmed reset timeout options; see the *CRST Delay* section. When using an external capacitor, use Equation 3 to determine the reset timeout.
CWD	2	I	Programmable watchdog timeout input. Watchdog timeout is set by connecting a capacitor between this pin and ground. Furthermore, this pin can also be connected by a 10-kΩ resistor to VDD, or leaving unconnected (NC) further enables the selection of the preset watchdog timeouts; see the *Timing Requirements* table. When using a capacitor, the TPS3850 determines the window watchdog upper boundary with Equation 6. The lower watchdog boundary is set by the SET pins, see Table 6 and the *CWD Functionality* section for additional information.
GND	5	—	Ground pin
$\overline{\text{RESET}}$	9	O	Reset output. Connect $\overline{\text{RESET}}$ using a 1-kΩ to 100-kΩ resistor to VDD. $\overline{\text{RESET}}$ goes low when the voltage at the SENSE pin goes below the undervoltage threshold ($V_{IT-(UV)}$) or above the overvoltage threshold ($V_{IT+(OV)}$). When the voltage level at the SENSE pin is within the normal operating range, the $\overline{\text{RESET}}$ timeout counter starts. At timer completion, $\overline{\text{RESET}}$ goes high. During startup, the state of $\overline{\text{RESET}}$ is undefined below the specified power-on reset voltage (V_{POR}). Above V_{POR}, $\overline{\text{RESET}}$ goes low and remains low until the monitored voltage is within the correct operating range (between $V_{IT-(UV)}$ and $V_{IT(+OV)}$) and the $\overline{\text{RESET}}$ timeout is complete.
SENSE	10	I	SENSE input to monitor voltage rail. Connect this pin to the supply rail that must be monitored.
SET0	3	I	Logic input. SET0, SET1, and CWD select the watchdog window ratios, timeouts, and disable the watchdog; see the *Timing Requirements* table.
SET1	6	I	Logic input. SET0, SET1, and CWD select the watchdog window ratios, timeouts, and disable the watchdog; see the *Timing Requirements* table.
VDD	1	I	Supply voltage pin. For noisy systems, connecting a 0.1-µF bypass capacitor is recommended.
WDI	7	I	Watchdog input. A falling transition (edge) must occur at this pin between the lower ($t_{WDL(max)}$) and upper ($t_{WDU(min)}$) window boundaries in order for $\overline{\text{WDO}}$ to not assert. When the watchdog is not in use, the SET pins can be used to disable the watchdog. The input at WDI is ignored when $\overline{\text{RESET}}$ or $\overline{\text{WDO}}$ are low (asserted) and also when the watchdog is disabled. If the watchdog is disabled, then WDI cannot be left unconnected and must be driven to either VDD or GND.
$\overline{\text{WDO}}$	8	O	Watchdog output. Connect $\overline{\text{WDO}}$ with a 1-kΩ to 100-kΩ resistor to VDD. $\overline{\text{WDO}}$ goes low (asserts) when a watchdog timeout occurs. $\overline{\text{WDO}}$ only asserts when $\overline{\text{RESET}}$ is high. When a watchdog timeout occurs, $\overline{\text{WDO}}$ goes low (asserts) for the set $\overline{\text{RESET}}$ timeout delay (t_{RST}). When $\overline{\text{RESET}}$ goes low, $\overline{\text{WDO}}$ is in a high-impedance state.
Thermal pad		—	Connect the thermal pad to a large-area ground plane. The thermal pad is internally connected to GND.

Copyright © 2016, Texas Instruments Incorporated

6 Specifications

6.1 Absolute Maximum Ratings

over operating free-air temperature range (unless otherwise noted)(1)

		MIN	MAX	UNIT
Supply voltage range	VDD	–0.3	7	V
Output voltage range	$\overline{\text{RESET}}$, $\overline{\text{WDO}}$	–0.3	7	V
Voltage ranges	SET0, SET1, WDI, SENSE	–0.3	7	V
	CWD, CRST	–0.3	VDD + 0.3(2)	
Output pin current	$\overline{\text{RESET}}$, $\overline{\text{WDO}}$		±20	mA
Input current (all pins)			±20	mA
Continuous total power dissipation		See *Thermal Information*		
Temperature	Operating junction, T_J(3)	–40	150	°C
	Operating free-air temperature, T_A(3)	–40	150	
	Storage, T_{stg}	–65	150	

(1) Stresses beyond those listed under *Absolute Maximum Ratings* may cause permanent damage to the device. These are stress ratings only, which do not imply functional operation of the device at these or any other conditions beyond those indicated under *Recommended Operating Conditions*. Exposure to absolute-maximum-rated conditions for extended periods may affect device reliability.
(2) The absolute maximum rating is V_{DD} + 0.3 V or 7.0 V, whichever is smaller.
(3) $T_J = T_A$ as a result of the low dissipated power in this device.

6.2 ESD Ratings

			VALUE	UNIT
$V_{(ESD)}$	Electrostatic discharge	Human-body model (HBM), per ANSI/ESDA/JEDEC JS-001(1)	±1000	V
		Charged-device model (CDM), per JEDEC specification JESD22-C101(2)	±500	

(1) JEDEC document JEP155 states that 500-V HBM allows safe manufacturing with a standard ESD control process. Manufacturing with less than 500-V HBM is possible with the necessary precautions.
(2) JEDEC document JEP157 states that 250-V CDM allows safe manufacturing with a standard ESD control process. Manufacturing with less than 250-V CDM is possible with the necessary precautions.

6.3 Recommended Operating Conditions

over operating free-air temperature range (unless otherwise noted)

		MIN	NOM	MAX	UNIT
VDD	Supply pin voltage	1.6		6.5	V
V_{SENSE}	Input pin voltage	0		6.5	V
V_{SET0}	SET0 pin voltage	0		6.5	V
V_{SET1}	SET1 pin voltage	0		6.5	V
C_{CRST}	$\overline{\text{RESET}}$ delay capacitor	0.1(1)		1000(1)	nF
CRST	Pullup resistor to VDD	9	10	11	kΩ
C_{CWD}	Watchdog timing capacitor	0.1(2)		1000(2)	nF
CWD	Pullup resistor to VDD	9	10	11	kΩ
R_{PU}	Pullup resistor, $\overline{\text{RESET}}$ and $\overline{\text{WDO}}$	1	10	100	kΩ
I_{RST}	$\overline{\text{RESET}}$ pin current			10	mA
I_{WDO}	Watchdog output current			10	mA
T_J	Junction Temperature	–40		125	°C

(1) Using a C_{CRST} capacitor of 0.1 nF or 1000 nF gives a reset delay of 703 µs or 3.22 seconds, respectively.
(2) Using a C_{CWD} capacitor of 0.1 nF or 1000 nF gives a $t_{WDU(typ)}$ of 62.74 ms or 77.45 seconds, respectively.

Copyright © 2016, Texas Instruments Incorporated

6.4 Thermal Information

THERMAL METRIC[1]		TPS3850 DRC (VSON) 10 PINS	UNIT
$R_{\theta JA}$	Junction-to-ambient thermal resistance	50.9	°C/W
$R_{\theta JC(top)}$	Junction-to-case (top) thermal resistance	50.6	°C/W
$R_{\theta JB}$	Junction-to-board thermal resistance	25.4	°C/W
ψ_{JT}	Junction-to-top characterization parameter	1.2	°C/W
ψ_{JB}	Junction-to-board characterization parameter	25.5	°C/W
$R_{\theta JC(bot)}$	Junction-to-case (bottom) thermal resistance	7.3	°C/W

(1) For more information about traditional and new thermal metrics, see the *Semiconductor and IC Package Thermal Metrics* application report.

6.5 Electrical Characteristics

at 1.6 V ≤ V_{DD} ≤ 6.5 V over the operating temperature range of –40°C ≤ T_J ≤ +125°C (unless otherwise noted); the open-drain pullup resistors are 10 kΩ for each output; typical values are at T_J = 25°C

PARAMETER		TEST CONDITIONS	MIN	TYP	MAX	UNIT
GENERAL CHARACTERISTICS						
V_{DD}[1][2][3]	Supply voltage		1.6		6.5	V
I_{DD}	Supply current			10	19	µA
RESET FUNCTION						
V_{POR}[2]	Power-on reset voltage	I_{RESET} = 15 µA, $V_{OL(MAX)}$ = 0.25 V			0.8	V
V_{UVLO}[1]	Undervoltage lockout voltage			1.35		V
$V_{IT+(OV)}$	Overvoltage SENSE threshold accuracy, entering $\overline{\text{RESET}}$		$V_{IT+(nom)}$–0.8%		$V_{IT+(nom)}$+0.8%	
$V_{IT-(UV)}$	Undervoltage SENSE threshold accuracy, entering $\overline{\text{RESET}}$		$V_{IT-(nom)}$–0.8%		$V_{IT-(nom)}$+0.8%	
$V_{IT(ADJ)}$	Falling SENSE threshold voltage, adjustable version only		0.3968	0.4	0.4032	V
V_{HYST}	Hysteresis voltage		0.2%	0.5%	0.8%	
I_{CRST}	CRST pin charge current	CRST = 0.5 V	337	375	413	nA
V_{CRST}	CRST pin threshold voltage		1.192	1.21	1.228	V
WINDOW WATCHDOG FUNCTION						
I_{CWD}	CWD pin charge current	CWD = 0.5 V	337	375	413	nA
V_{CWD}	CWD pin threshold voltage		1.192	1.21	1.228	V
V_{OL}	$\overline{\text{RESET}}$, $\overline{\text{WDO}}$ output low	VDD = 5 V, I_{SINK} = 3 mA			0.4	V
I_D	$\overline{\text{RESET}}$, $\overline{\text{WDO}}$ output leakage current	VDD = 1.6 V, $V_{\overline{\text{RESET}}}$ = $V_{\overline{\text{WDO}}}$ = 6.5 V			1	µA
V_{IL}	Low-level input voltage (SET0, SET1)				0.25	V
V_{IH}	High-level input voltage (SET0, SET1)		0.8			V
$V_{IL(WDI)}$	Low-level input voltage (WDI)				0.3 × V_{DD}	V
$V_{IH(WDI)}$	High-level input voltage (WDI)		0.8 × V_{DD}			V
I_{SENSE}	SENSE pin idle current	TPS3850Xyy(y), V_{SENSE} = 5.0 V, VDD = 3.3 V		2.1	2.5	µA
		TPS3850H01 only, V_{SENSE} = 5.0 V, VDD = 3.3 V	–50		50	nA

(1) When V_{DD} falls below V_{UVLO}, $\overline{\text{RESET}}$ is driven low.
(2) When V_{DD} falls below V_{POR}, $\overline{\text{RESET}}$ and $\overline{\text{WDO}}$ are undefined.
(3) During power-on, V_{DD} must be a minimum 1.6 V for at least 300 µs before the output corresponds to the SENSE voltage.

Copyright © 2016, Texas Instruments Incorporated

6.6 Timing Requirements

			MIN	TYP	MAX	UNIT
GENERAL						
t_{INIT}	CWD, CRST pin evaluation period			381		µs
t_{SET}	Time required between changing SET0 and SET1 pins			500		µs
	SET0, SET1 pin setup time			1		µs
	Startup delay(1)			300		µs
RESET FUNCTION						
t_{RST}	Reset timeout period	CRST = NC	170	200	230	ms
		CRST = 10 kΩ to VDD	8.5	10	11.5	ms
$t_{RST-DEL}$	V_{SENSE} to $\overline{RESET}$ delay	VDD = 5 V, V_{SENSE} = $V_{IT+(OV)}$ + 2.5%		35		µs
		VDD = 5 V, V_{SENSE} = $V_{IT-(UV)}$ – 2.5%		17		
WINDOW WATCHDOG FUNCTION						
WD ratio	Window watchdog ratio of lower boundary to upper boundary	CWD = programmable, SET0 = 0, SET1 = 0(2)		1/8		
		CWD = programmable, SET0 = 1, SET1 = 1(2)		1/2		
		CWD = programmable, SET0 = 0, SET1 = 1(2)(3)		3/4		
t_{WDL}	Window watchdog lower boundary	CWD = NC, SET0 = 0, SET1 = 0	19.1	22.5	25.9	ms
		CWD = NC, SET0 = 0, SET1 = 1	1.5	1.85	2.2	ms
		CWD = NC, SET0 = 1, SET1 = 0	Watchdog disabled			
		CWD = NC, SET0 = 1, SET1 = 1	680	800	920	ms
		CWD = 10 kΩ to VDD, SET0 = 0, SET1 = 0	7.7	9.0	10.4	ms
		CWD = 10 kΩ to VDD, SET0 = 0, SET1 = 1	7.7	9.0	10.4	ms
		CWD = 10 kΩ to VDD, SET0 = 1, SET1 = 0	Watchdog disabled			
		CWD = 10 kΩ to VDD, SET0 = 1, SET1 = 1	1.5	1.85	2.2	ms
t_{WDU}	Window watchdog upper boundary	CWD = NC, SET0 = 0, SET1 = 0	46.8	55.0	63.3	ms
		CWD = NC, SET0 = 0, SET1 = 1	22.0	27.5	33.0	ms
		CWD = NC, SET0 = 1, SET1 = 0	Watchdog disabled			
		CWD = NC, SET0 = 1, SET1 = 1	1360	1600	1840	ms
		CWD = 10 kΩ to VDD, SET0 = 0, SET1 = 0	92.7	109.0	125.4	ms
		CWD = 10 kΩ to VDD, SET0 = 0, SET1 = 1	165.8	195.0	224.3	ms
		CWD = 10 kΩ to VDD, SET0 = 1, SET1 = 0	Watchdog disabled			
		CWD = 10 kΩ to VDD, SET0 = 1, SET1 = 1	8.8	11.0	13.2	ms
$t_{WD-setup}$	Setup time required for device to respond to changes on WDI after being enabled			150		µs
	Minimum WDI pulse duration			50		ns
t_{WD-del}	WDI to $\overline{WDO}$ delay			50		ns

(1) During power-on, V_{DD} must be a minimum 1.6 V for at least 300 µs before the output corresponds to the SENSE voltage.
(2) 0 refers to $V_{SET} \le V_{IL}$, 1 refers to $V_{SET} \ge V_{IH}$.
(3) If this watchdog ratio is used, then $t_{WDL(max)}$ can overlap $t_{WDU(min)}$.

Copyright © 2016, Texas Instruments Incorporated

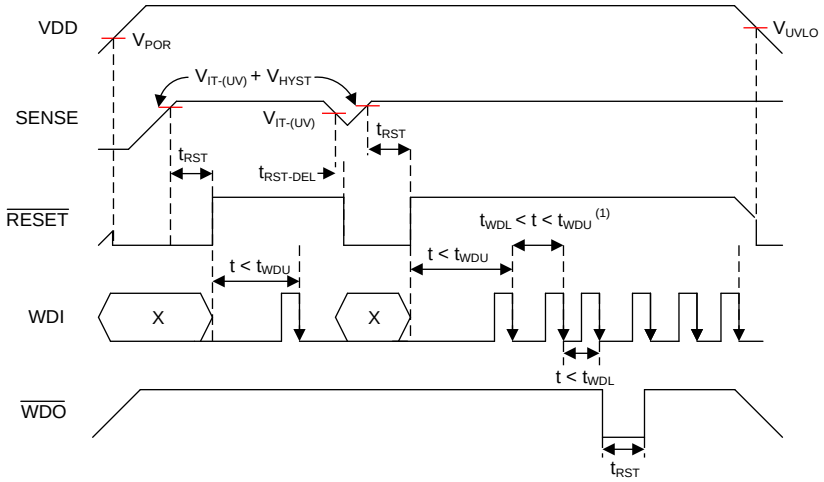

(1) See Figure 2 for WDI timing requirements.

Figure 1. Timing Diagram

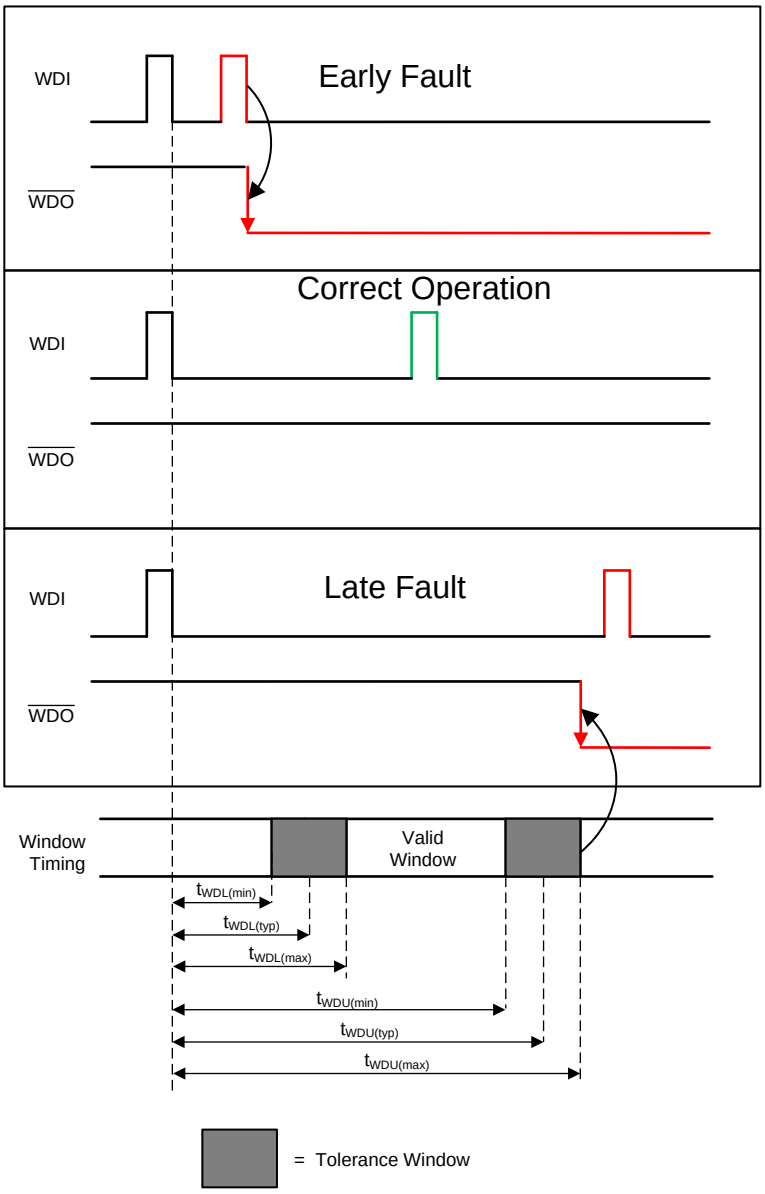

Figure 2. TPS3850 Window Watchdog Timing

Copyright © 2016, Texas Instruments Incorporated

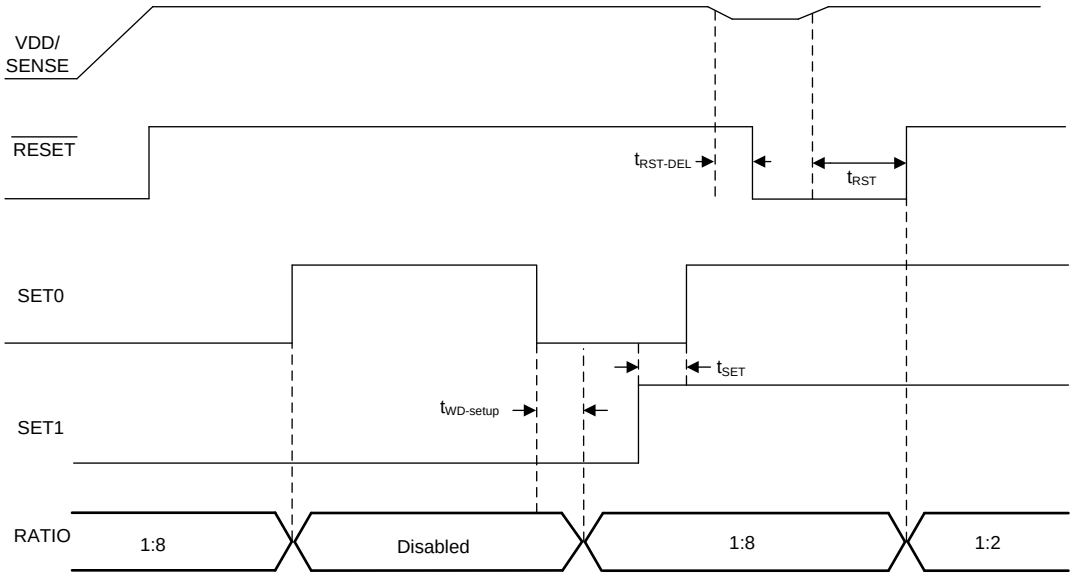

Figure 3. Changing SET0 and SET1 Pins

6.7 Typical Characteristics

all curves are taken at T_A = 25°C with 1.6 V ≤ V_{DD} ≤ 6.5 V (unless otherwise noted)

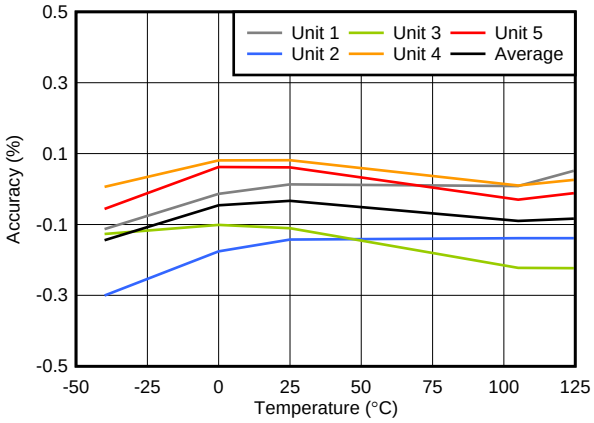

Figure 4. $V_{IT+(OV)}$ Accuracy vs Temperature

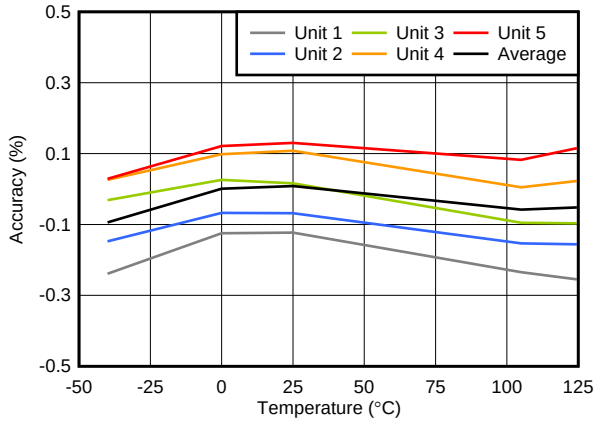

Figure 5. $V_{IT-(UV)}$ Accuracy vs Temperature

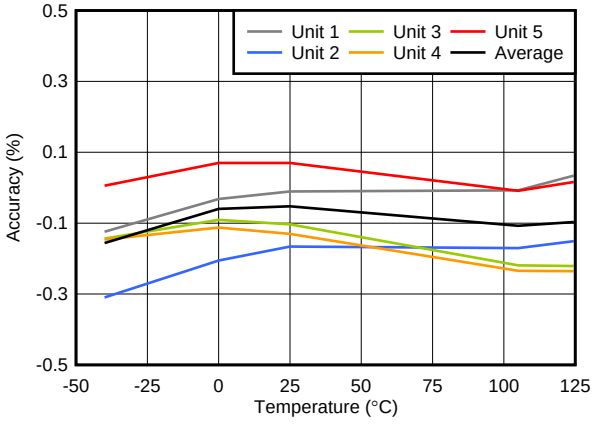

Figure 6. $V_{IT-(OV)}$ Accuracy vs Temperature

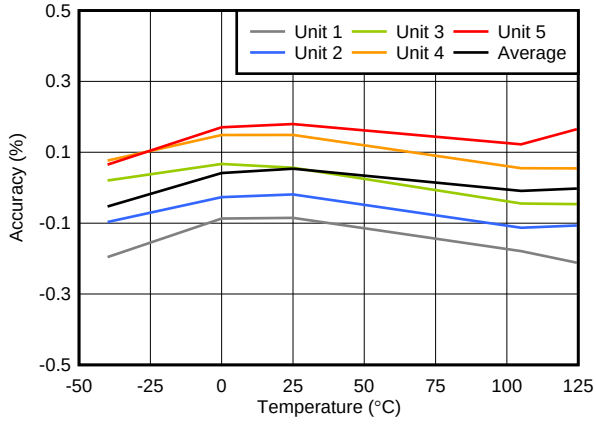

Figure 7. $V_{IT+(UV)}$ Accuracy vs Temperature

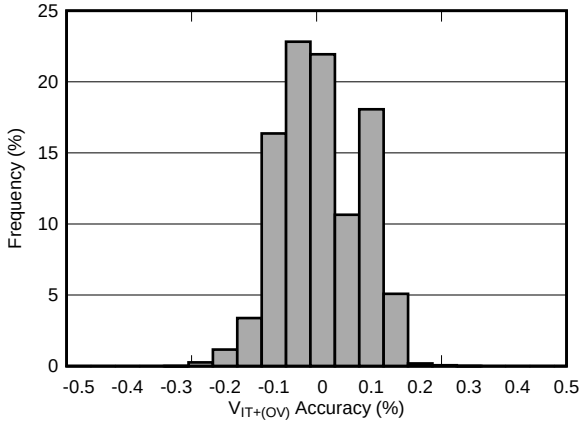

Includes G and H versions; with 1.2-V, 1.8-V, 3.0-V, 3.3-V, and 5-V thresholds; total units = 41,111

Figure 8. $V_{IT+(OV)}$ Accuracy Histogram

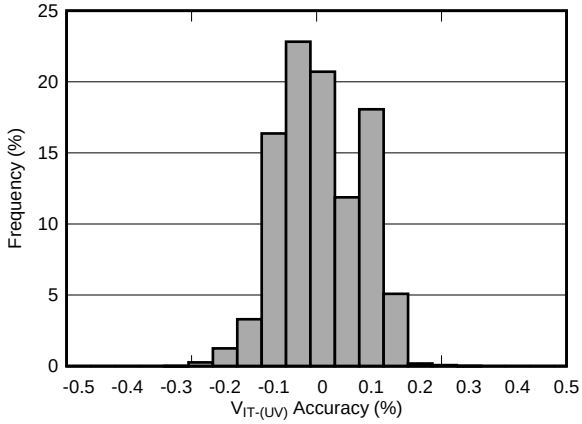

Includes G and H versions; with 1.2-V, 1.8-V, 3.0-V, 3.3-V, and 5-V thresholds; total units = 41,111

Figure 9. $V_{IT-(UV)}$ Accuracy Histogram

Copyright © 2016, Texas Instruments Incorporated

Typical Characteristics (continued)

all curves are taken at T_A = 25°C with 1.6 V ≤ V_{DD} ≤ 6.5 V (unless otherwise noted)

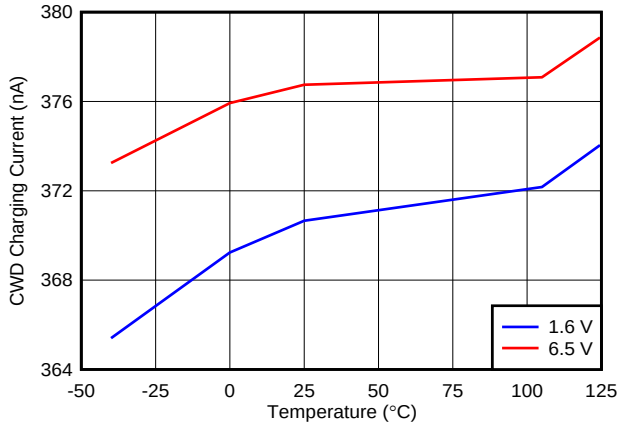

Figure 10. CWD Charging Current vs Temperature

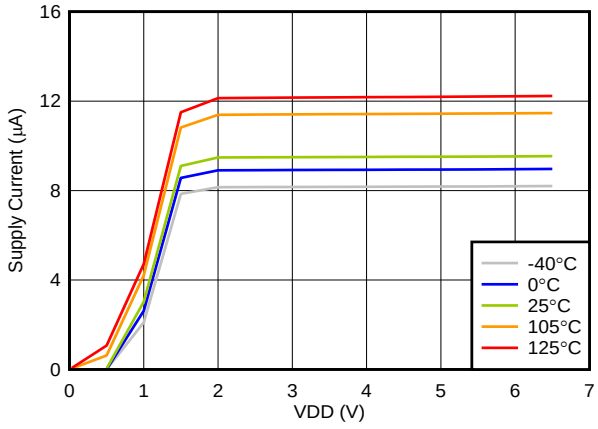

Figure 11. Supply Current vs Power-Supply Voltage

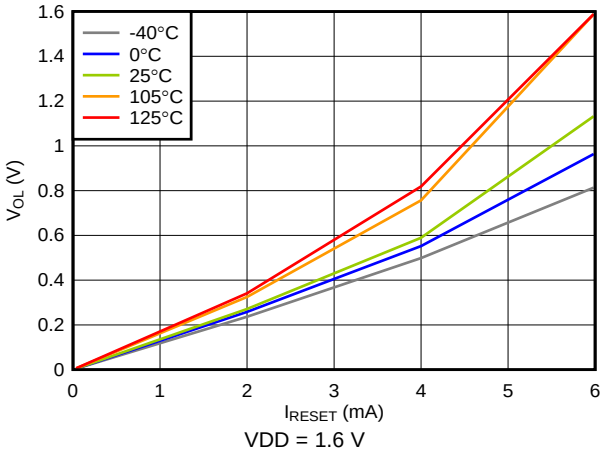

Figure 12. Low-Level $\overline{\text{RESET}}$ Voltage vs $\overline{\text{RESET}}$ Current

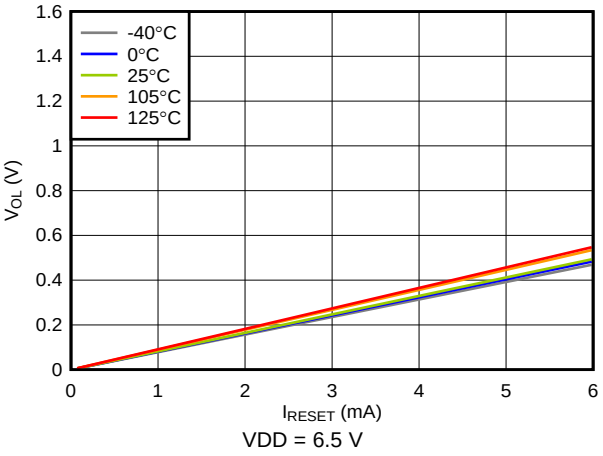

Figure 13. Low-Level $\overline{\text{RESET}}$ Voltage vs $\overline{\text{RESET}}$ Current

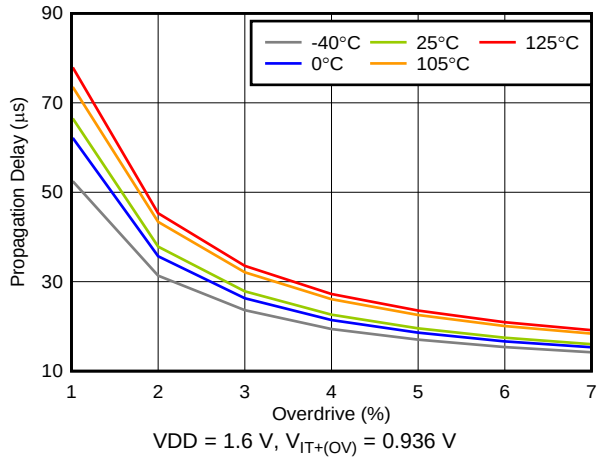

Figure 14. Propagation Delay vs Overdrive

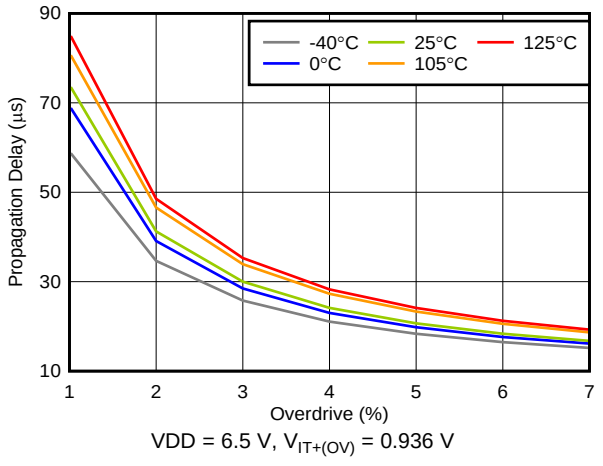

Figure 15. Propagation Delay vs Overdrive

Copyright © 2016, Texas Instruments Incorporated

Typical Characteristics (continued)

all curves are taken at T_A = 25°C with 1.6 V ≤ V_{DD} ≤ 6.5 V (unless otherwise noted)

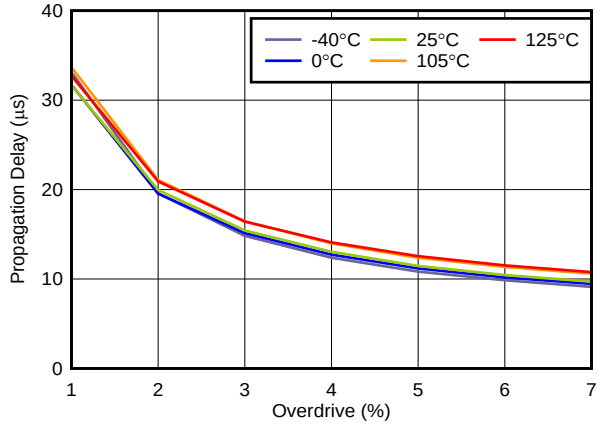

VDD = 1.6 V, $V_{IT-(UV)}$ = 0.864 V

Figure 16. Propagation Delay vs Overdrive

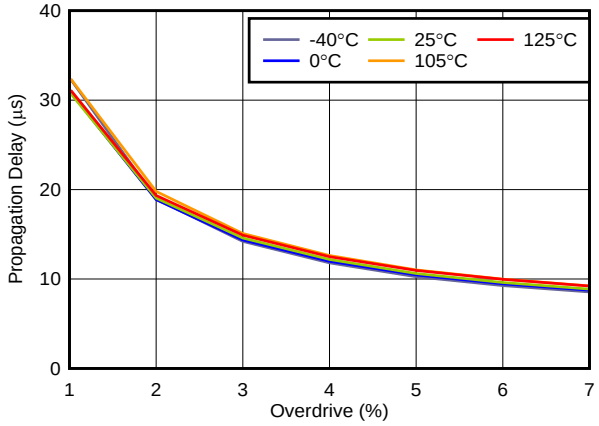

VDD = 6.5 V, $V_{IT-(UV)}$ = 0.864 V

Figure 17. Propagation Delay vs Overdrive

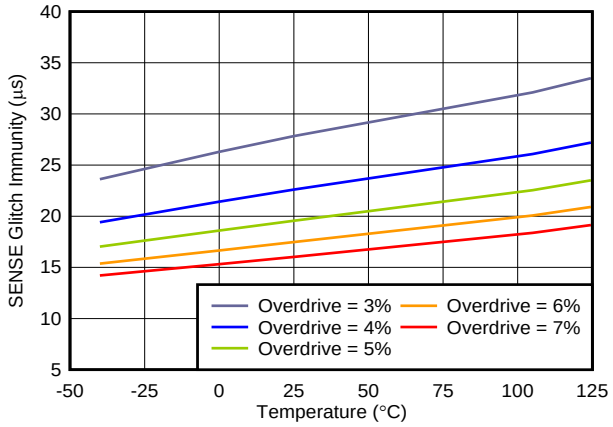

VDD = 1.6 V, $V_{IT+(OV)}$ = 0.936 V

Figure 18. SENSE Glitch Immunity vs Temperature

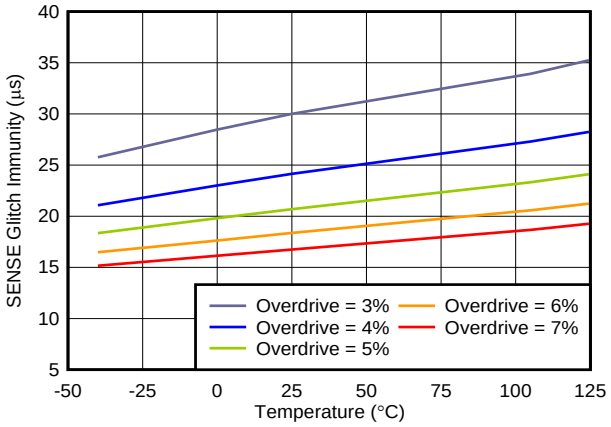

VDD = 6.5 V, $V_{IT+(OV)}$ = 0.936 V

Figure 19. SENSE Glitch Immunity vs Temperature

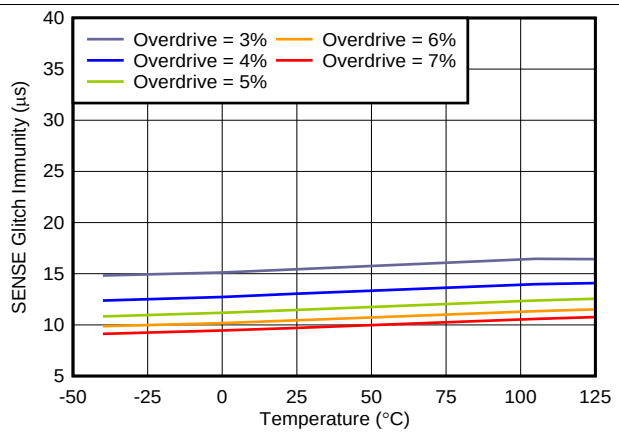

VDD = 1.6 V, $V_{IT-(UV)}$ = 0.864 V

Figure 20. SENSE Glitch Immunity vs Temperature

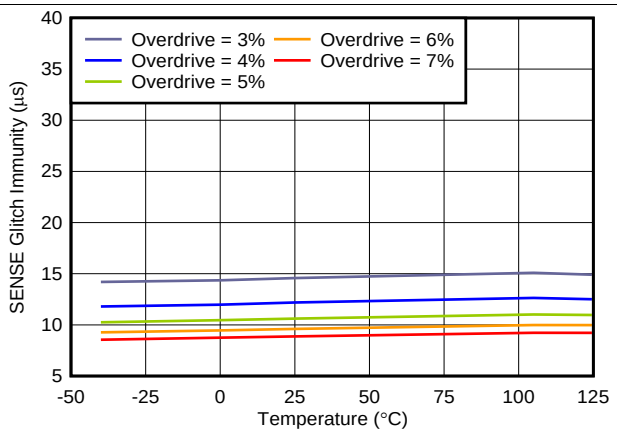

VDD = 6.5 V, $V_{IT-(UV)}$ = 0.864 V

Figure 21. SENSE Glitch Immunity vs Temperature

Copyright © 2016, Texas Instruments Incorporated

7 Detailed Description

7.1 Overview

The TPS3850 is a high-accuracy voltage supervisor with an integrated watchdog timer. This device includes a precision voltage supervisor with both overvoltage ($V_{IT+(OV)}$) and undervoltage ($V_{IT-(UV)}$) thresholds that achieve 0.8% accuracy over the specified temperature range of –40°C to +125°C. In addition, the TPS3850 includes accurate hysteresis on both thresholds, making the device ideal for use with tight tolerance systems where voltage supervisors must ensure a $\overline{\text{RESET}}$ before the minimum and maximum supply tolerance of the microprocessor or system-on-a-chip (SoC) is reached.

7.2 Functional Block Diagram

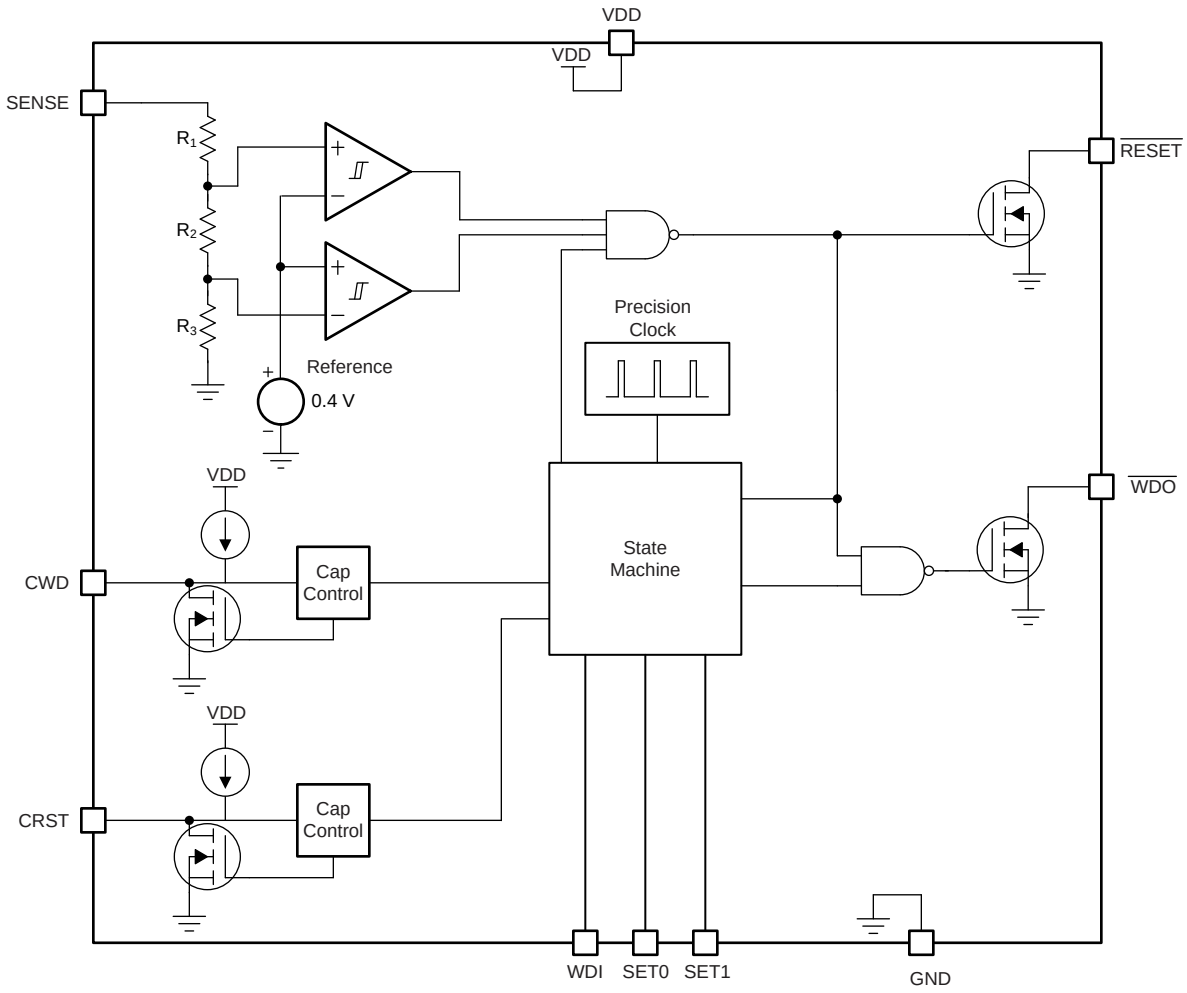

NOTE: $R_{TOTAL} = R_1 + R_2 + R_3 = 4.5\ M\Omega$.

Functional Block Diagram (continued)

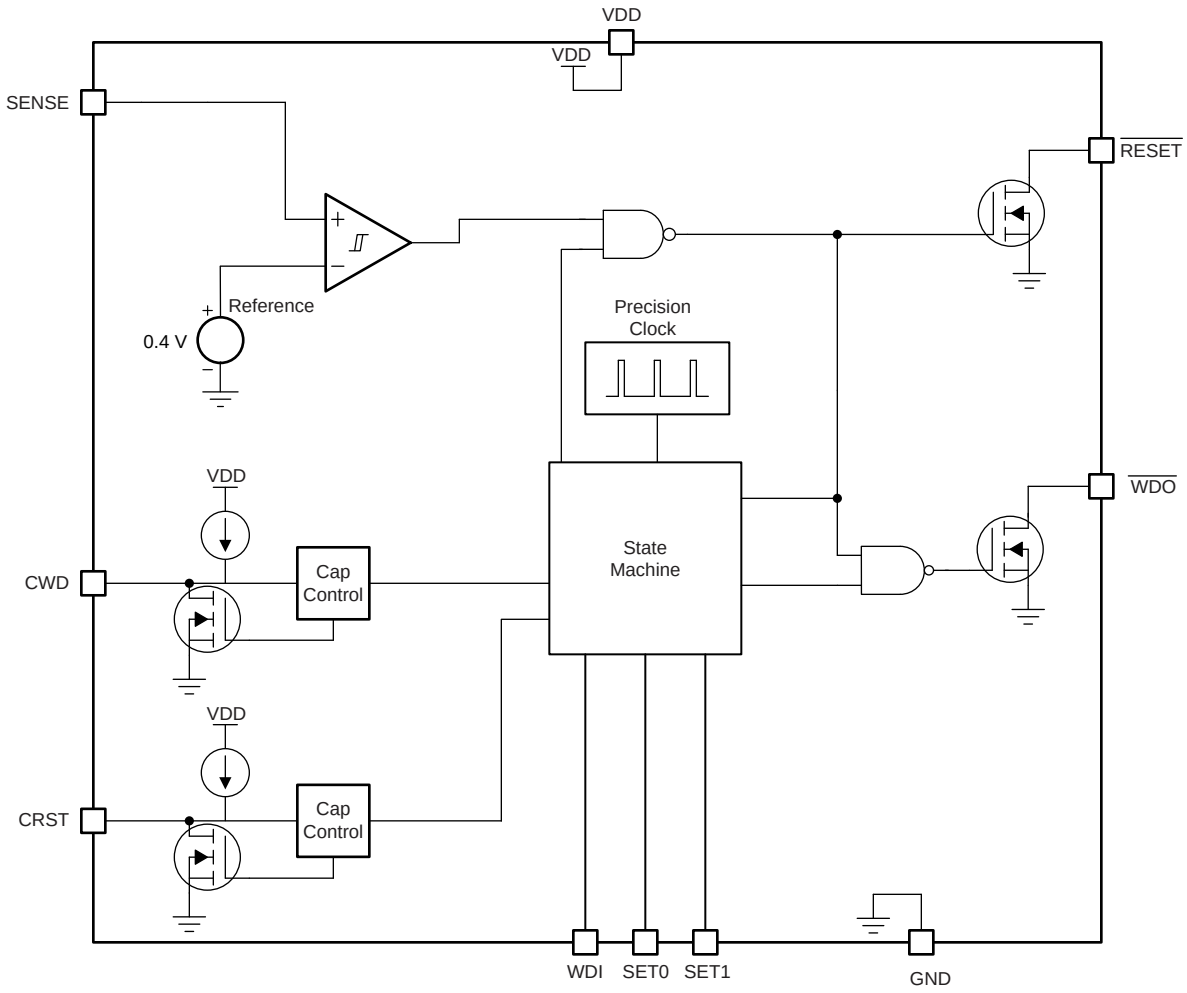

Figure 22. Adjustable Version Block Diagram

7.3 Feature Description

7.3.1 CRST

The CRST pin provides the user the functionality of both high-precision, factory-programmed, reset delay timing options and user-programmable, reset delay timing. The CRST pin can be pulled up to VDD through a resistor, have an external capacitor to ground, or can be left unconnected. The configuration of the CRST pin is re-evaluated by the device every time the voltage on the SENSE line enters the valid window ($V_{IT+(UV)}$ < V_{SENSE} < $V_{IT-(OV)}$). The pin evaluation is controlled by an internal state machine that determines which option is connected to the CRST pin. The sequence of events takes 381 µs (t_{INIT}) to determine if the CRST pin is left unconnected, pulled up through a resistor, or connected to a capacitor. If the CRST pin is being pulled up to VDD, then a 10-kΩ pullup resistor is required.

7.3.2 $\overline{\text{RESET}}$

The $\overline{\text{RESET}}$ pin features a programmable reset delay time that can be adjusted from 703 µs to 3.22 seconds when using adjustable capacitor timing. $\overline{\text{RESET}}$ is an open-drain output that should be pulled up through a 1-kΩ to 100-kΩ pullup resistor. When V_{DD} is above $V_{DD(min)}$, $\overline{\text{RESET}}$ remains high (not asserted) when the SENSE voltage is between the positive threshold ($V_{IT+(OV)}$) and the negative threshold ($V_{IT-(UV)}$). If SENSE falls below $V_{IT-(UV)}$ or rises above $V_{IT+(OV)}$, then $\overline{\text{RESET}}$ is asserted, driving the $\overline{\text{RESET}}$ pin to a low-impedance state. When SENSE comes back into the valid window, a $\overline{\text{RESET}}$ delay circuit is enabled that holds $\overline{\text{RESET}}$ low for a

Copyright © 2016, Texas Instruments Incorporated

Feature Description (continued)

specified reset delay period (t_{RST}). This t_{RST} period is determined by what is connected to the CRST pin; see Figure 28. When the reset delay has elapsed, the $\overline{\text{RESET}}$ pin goes to a high-impedance state and uses a pullup resistor to hold $\overline{\text{RESET}}$ high. The pullup resistor must be connected to the proper voltage rail to allow other devices to be connected at the correct interface voltage. To ensure proper voltage levels, give some consideration when choosing the pullup resistor values. The pullup resistor value is determined by output logic low voltage (V_{OL}), capacitive loading, and leakage current (I_D); see the *CRST Delay* section for more information.

7.3.3 Over- and Undervoltage Fault Detection

The TPS3850 features both overvoltage detection and undervoltage detection. This detection is achieved through the combination of two comparators with a precision voltage reference and a trimmed resistor divider (fixed versions only). The SENSE pin is used to monitor the critical voltage rail; this configuration optimizes device accuracy because all resistor tolerances are accounted for in the accuracy and performance specifications. Both comparators also include built-in hysteresis that provides some noise immunity and ensures stable operation. If the voltage on the SENSE pin drops below $V_{IT-(UV)}$, then $\overline{\text{RESET}}$ is asserted (driven low). When the voltage on the SENSE pin is between the positive and negative threshold voltages, $\overline{\text{RESET}}$ deasserts after the user-defined $\overline{\text{RESET}}$ delay time, as shown in Figure 23.

The SENSE input can vary from GND to 6.5 V, regardless of the device supply voltage used. Although not required in most cases, for noisy applications, good analog-design practice is to place a 1-nF to 10-nF bypass capacitor at the SENSE pin in order to reduce sensitivity to transient voltages on the monitored signal.

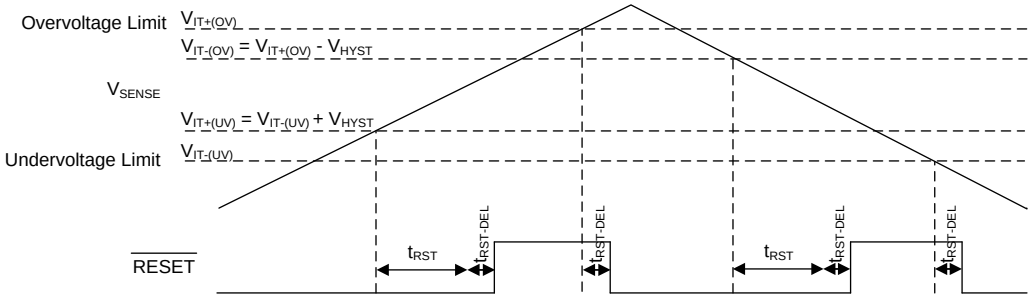

Figure 23. Window Comparator Timing Diagram

7.3.4 Adjustable Operation Using the TPS3850H01

The adjustable version (TPS3850H01) can be used to monitor any voltage rail down to 0.4 V using the circuit illustrated in Figure 24. When using the TPS3850H01, the device does not function as a window comparator; instead, the device only monitors the undervoltage threshold. To monitor a user-defined voltage, the target threshold voltage for the monitored supply (V_{MON}) and the resistor divider values can be calculated by using Equation 1 and Equation 2, respectively:

$$V_{MON} = V_{IT(ADJ)} \times \left(1 + \frac{R_1}{R_2}\right) \quad (1)$$

Equation 1 can be used to calculate either the negative threshold or the positive threshold by replacing V_{ITx} with either V_{ITN} or $V_{ITN} + V_{HYST}$, respectively.

$$R_{TOTAL} = R_1 + R_2 \quad (2)$$

Large resistor values minimize current consumption; however, the input bias current of the device degrades accuracy if the current through the resistors is too low. Therefore, choosing an R_{TOTAL} value so that the current through the resistor divider is at least 100 times larger than the maximum SENSE pin current (I_{SENSE}) ensures a good degree of accuracy; see the *Optimizing Resistor Dividers at a Comparator Input* application report for more details on sizing input resistors.

Copyright © 2016, Texas Instruments Incorporated

Feature Description (continued)

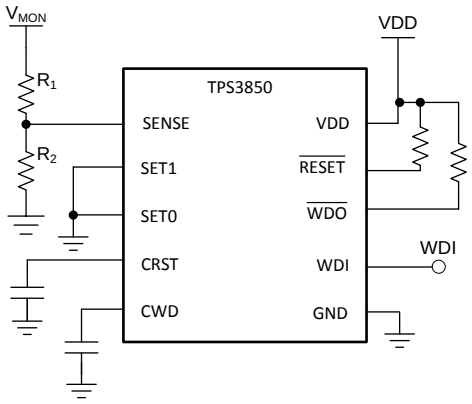

Figure 24. Adjustable Voltage Monitor

7.3.5 Window Watchdog

7.3.5.1 SET0 and SET1

When changing the SET0 or SET1 pins, there are two cases to consider: enabling and disabling the watchdog, and changing the SET0 or SET1 pins when the watchdog is enabled. In case 1 where the watchdog is being enabled or disabled, the changes take effect immediately. However, in case 2, a $\overline{\text{RESET}}$ event must occur in order for the changes to take place.

7.3.5.1.1 Enabling the Window Watchdog

The TPS3850 features the ability to enable and disable the watchdog timer. This feature allows the user to start with the watchdog timer disabled and then enable the watchdog timer using the SET0 and SET1 pins. The ability to enable and disable the watchdog is useful to avoid undesired watchdog trips during initialization and shutdown. When the SETx pins are changed to disable the watchdog timer, changes on the pins are responded to immediately (as shown in Figure 25). When the watchdog goes from disabled to enabled, there is a 150 µs ($t_{WD\text{-}setup}$) transition period where the device does not respond to changes on WDI. After this 150-µs period, the device begins to respond to changes on WDI again.

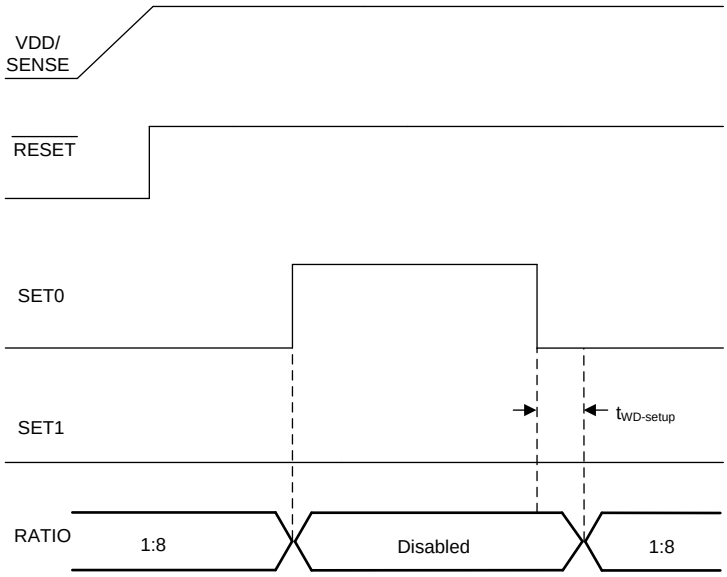

Figure 25. Enabling the Watchdog Timer

Copyright © 2016, Texas Instruments Incorporated

Feature Description (continued)

7.3.5.1.2 SET0 and SET1 During Normal Watchdog Operation

The SET0 and SET1 pins can be used to control the window watchdog ratio of the lower boundary to the upper boundary. There are four possible modes for the watchdog (see Table 6): disabled, 1:8 ratio, 3:4 ratio, and 1:2 ratio. If SET0 = 1 and SET1 = 0, then the watchdog is disabled. When the watchdog is disabled $\overline{WDO}$ does not assert, and the TPS3850 functions as a normal supervisor. The SET0 and SET1 pins can be changed when the device is operational, but cannot be changed at the same time. If these pins are changed when the device is operational, then there must be a 500-µs (t_{SET}) delay between switching the two pins. If the SET0 and SET1 are used to change the reset timing, then a reset event must occur before the new timing condition is latched. This reset can be triggered by SENSE rising above $V_{IT+(OV)}$ or below $V_{IT-(UV)}$, or by bringing V_{DD} below V_{UVLO}. Figure 26 shows how the SET0 and SET1 pins do not change the watchdog timing option until a reset event has occurred.

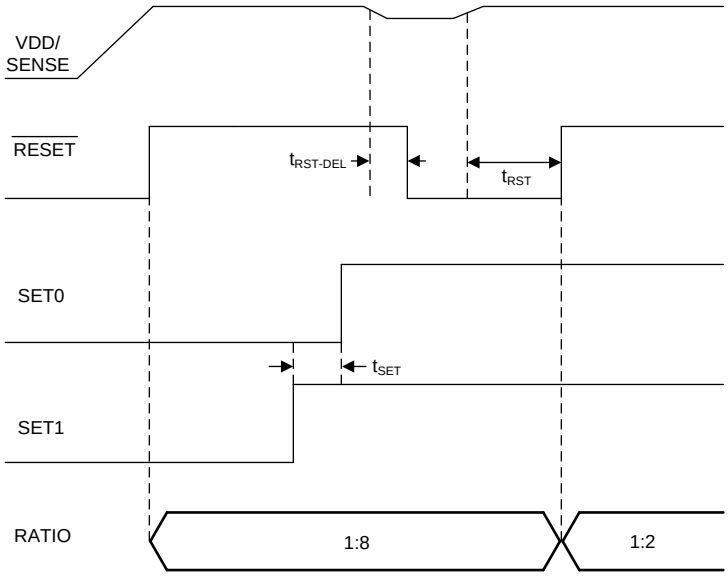

Figure 26. Changing SET0 and SET1 Pins

Feature Description (continued)

7.3.6 Window Watchdog Timer

This section provides information for the window watchdog modes of operation. A window watchdog is typically employed in safety critical applications where a traditional watchdog timer is inadequate. In a traditional watchdog, there is a maximum time in which a pulse must be issued to prevent the reset from occurring. However, in a window watchdog the pulse must be issued between a maximum lower window time ($t_{WDL(max)}$) and the minimum upper window time ($t_{WDU(min)}$) set by the CWD pin and the SET0 and SET1 pins. Table 6 describes how t_{WDU} can be used to calculate the timing of t_{WDL}. The t_{WDL} timing can also be changed by adjusting the SET0 and SET1 pins. Figure 27 shows the valid region for a WDI pulse to be issued to prevent the WDO from being triggered and being pulled low.

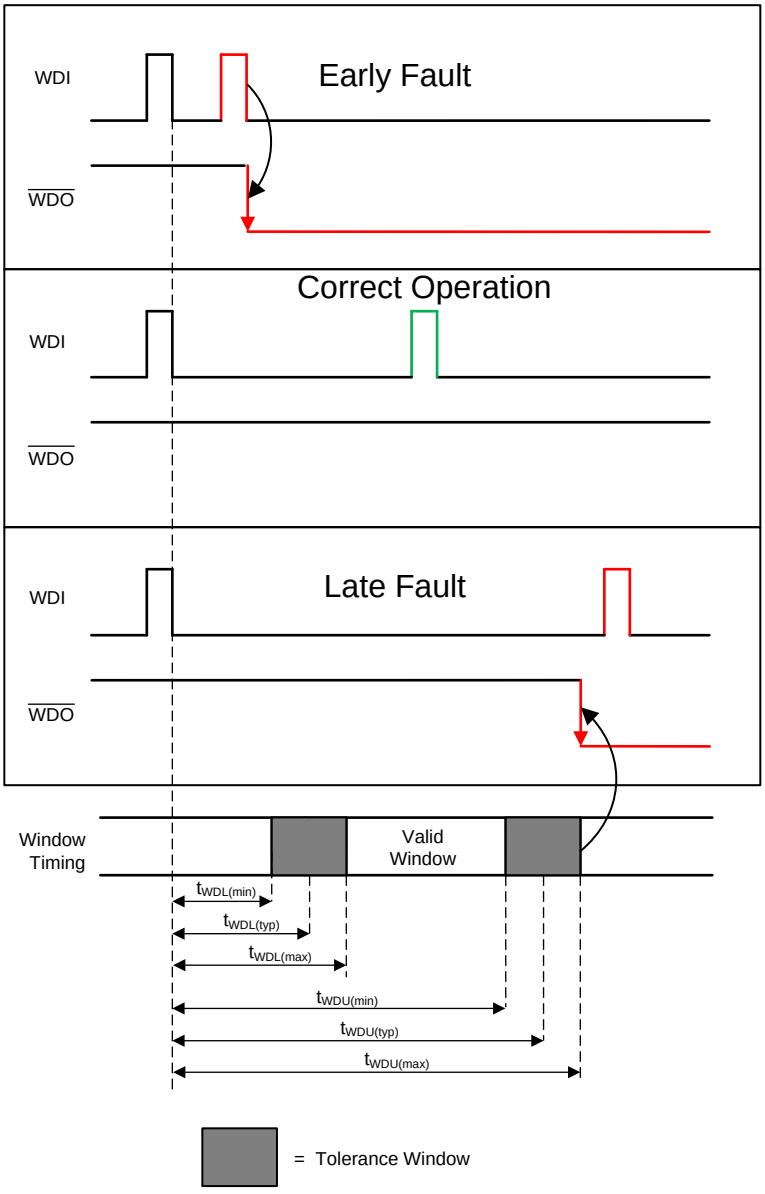

Figure 27. TPS3850 Window Watchdog Timing

Copyright © 2016, Texas Instruments Incorporated

Feature Description (continued)

7.3.6.1 CWD

The CWD pin provides the user the functionality of both high-precision, factory-programmed watchdog timing options and user-programmable watchdog timing. The TPS3850 features three options for setting the watchdog window: connecting a capacitor to the CWD pin, connecting a pullup resistor to VDD, and leaving the CWD pin unconnected. The configuration of the CWD pin is evaluated by the device every time V_{SENSE} enters the valid window ($V_{IT+(UV)} < V_{SENSE} < V_{IT-(OV)}$). The pin evaluation is controlled by an internal state machine that determines which option is connected to the CWD pin. The sequence of events takes 381 µs (t_{INIT}) to determine if the CWD pin is left unconnected, pulled up through a resistor, or connected to a capacitor. If the CWD pin is being pulled up to VDD using a pullup resistor, then a 10-kΩ resistor is required.

7.3.6.2 WDI Functionality

WDI is the watchdog timer input that controls the $\overline{WDO}$ output. The WDI input is triggered by the falling edge of the input signal. For the first pulse, the watchdog acts as a traditional watchdog timer; thus, the first pulse must be issued before $t_{WDU(min)}$. After the first pulse, to ensure proper functionality of the watchdog timer, always issue the WDI pulse within the window of $t_{WDL(max)}$ and $t_{WDU(min)}$. If the pulse is issued in this region, then $\overline{WDO}$ remains unasserted. Otherwise, the device asserts $\overline{WDO}$, putting the $\overline{WDO}$ pin into a low-impedance state.

The watchdog input (WDI) is a digital pin. In order to ensure there is no increase in I_{DD}, drive the WDI pin to either VDD or GND at all times. Putting the pin to an intermediate voltage can cause an increase in supply current (I_{DD}) because of the architecture of the digital logic gates. When $\overline{RESET}$ is asserted, the watchdog is disabled and all signals input to WDI are ignored. When $\overline{RESET}$ is no longer asserted, the device resumes normal operation and no longer ignores the signal on WDI. If the watchdog is disabled, drive the WDI pin to either VDD or GND.

7.3.6.3 $\overline{WDO}$ Functionality

The TPS3850 features a window watchdog timer with an independent watchdog output ($\overline{WDO}$). The independent watchdog output provides the flexibility to flag a fault in the watchdog timing without performing an entire system reset. When $\overline{RESET}$ is not asserted (high), the $\overline{WDO}$ signal maintains normal operation. When asserted, $\overline{WDO}$ remains down for t_{RST}. When the $\overline{RESET}$ signal is asserted (low), the $\overline{WDO}$ pin goes to a high-impedance state. When $\overline{RESET}$ is unasserted, the window watchdog timer resumes normal operation and $\overline{WDO}$ can be used again.

Copyright © 2016, Texas Instruments Incorporated

7.4 Device Functional Modes

Table 1 summarizes the functional modes of the TPS3850.

Table 1. Device Functional Modes

VDD	WDI	$\overline{WDO}$	SENSE	$\overline{RESET}$
$V_{DD} < V_{POR}$	—	—	—	Undefined
$V_{POR} \le V_{DD} < V_{UVLO}$	Ignored	High	—	Low
$V_{DD} \ge V_{DD(min)}$	Ignored	High	$V_{SENSE} < V_{IT+(UV)}$ (1)	Low
	Ignored	High	$V_{SENSE} > V_{IT-(OV)}$ (1)	Low
	$t_{WDL(max)} \le t_{pulse}$ (2) $\le t_{WDU(min)}$	High	$V_{IT-(UV)} < V_{SENSE} < V_{IT+(OV)}$ (3)	High
	$t_{WDL(max)} > t_{pulse}$ (2)	Low	$V_{IT-(UV)} < V_{SENSE} < V_{IT+(OV)}$ (3)	High
	$t_{WDU(min)} < t_{pulse}$ (2)	Low	$V_{IT-(UV)} < V_{SENSE} < V_{IT+(OV)}$ (3)	High

(1) When V_{SENSE} has not entered the valid window.
(2) Where t_{pulse} is the time between falling edges on WDI.
(3) When V_{SENSE} is in the valid window.

7.4.1 V_{DD} is Below V_{POR} ($V_{DD} < V_{POR}$)

When V_{DD} is less than V_{POR}, $\overline{RESET}$ is undefined and can be either high or low. The state of $\overline{RESET}$ largely depends on the load that the $\overline{RESET}$ pin is experiencing.

7.4.2 Above Power-On-Reset But Less Than UVLO ($V_{POR} \le V_{DD} < V_{UVLO}$)

When V_{DD} is less than V_{UVLO}, and greater than or equal to V_{POR}, the $\overline{RESET}$ signal is asserted (logic low) regardless of the voltage on the SENSE pin. When $\overline{RESET}$ is asserted, the watchdog output $\overline{WDO}$ is in a high-impedance state regardless of the WDI signal that is input to the device.

7.4.3 Above UVLO But Less Than $V_{DD(min)}$ ($V_{UVLO} \le V_{DD} < V_{DD(min)}$)

When V_{DD} is less than $V_{DD(min)}$ and greater than or equal to V_{UVLO}, the $\overline{RESET}$ signal responds to changes on the SENSE pin, but the accuracy can be degraded.

7.4.4 Normal Operation ($V_{DD} \ge V_{DD(min)}$)

When V_{DD} is greater than or equal to $V_{DD(min)}$, the $\overline{RESET}$ signal is determined by V_{SENSE}. When $\overline{RESET}$ is asserted, $\overline{WDO}$ goes to a high-impedance state. $\overline{WDO}$ is then pulled high through the pullup resistor.

Copyright © 2016, Texas Instruments Incorporated

8 Application and Implementation

NOTE

Information in the following applications sections is not part of the TI component specification, and TI does not warrant its accuracy or completeness. TI's customers are responsible for determining suitability of components for their purposes. Customers should validate and test their design implementation to confirm system functionality.

8.1 Application Information

The following sections describe in detail proper device implementation, depending on the final application requirements.

8.1.1 CRST Delay

The TPS3850 features three options for setting the reset delay (t_{RST}): connecting a capacitor to the CRST pin, connecting a pullup resistor to VDD, and leaving the CRST pin unconnected. Figure 28 shows a schematic drawing of all three options. To determine which option is connected to the CRST pin, an internal state machine controls the internal pulldown device and measures the pin voltage. This sequence of events takes 381 µs (t_{INIT}) to determine which timing option is used. Every time $\overline{\text{RESET}}$ is asserted, the state machine determines what is connected to the pin.

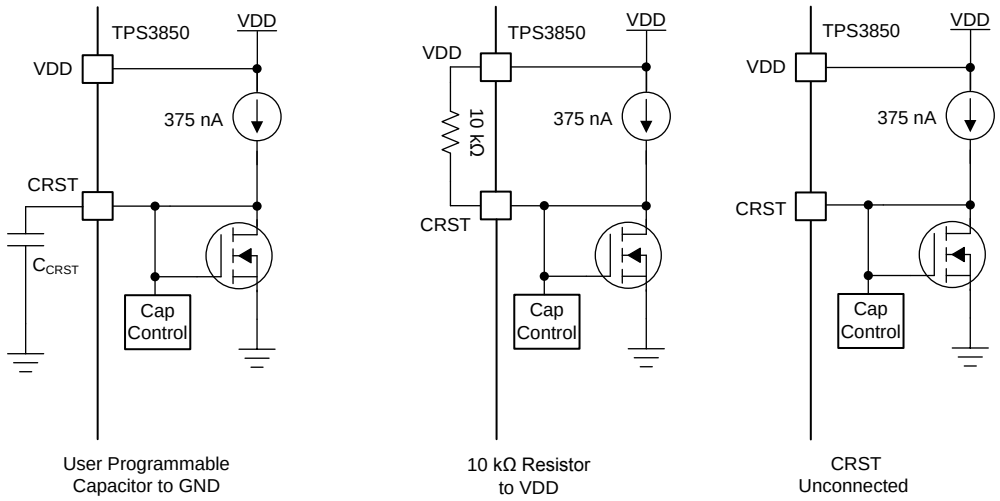

Figure 28. CRST Charging Circuit

8.1.1.1 Factory-Programmed Reset Delay Timing

To use the factory-programmed timing options, the CRST pin must either be left unconnected or pulled up to VDD through a 10-kΩ pullup resistor. Using these options enables a high-precision, 15% accurate reset delay timing, as shown in Table 2.

Table 2. Reset Delay Time for Factory-Programmed Reset Delay Timing

CRST	$\overline{\text{RESET}}$ DELAY TIME (t_{RST})			UNIT
	MIN	TYP	MAX	
NC	170	200	230	ms
10 kΩ to VDD	8.5	10	11.5	ms

8.1.1.2 Programmable Reset Delay-Timing

The TPS3850 uses a CRST pin charging current (I_{CRST}) of 375 nA. When using an external capacitor, the rising $\overline{RESET}$ delay time can be set to any value between 700 µs (C_{CRST} = 100 pF) and 3.2 seconds (C_{CRST} = 1 µF). The typical ideal capacitor value needed for a given delay time can be calculated using Equation 3, where C_{CRST} is in microfarads and t_{RST} is in seconds:

$$t_{RST} = 3.22 \times C_{CRST} + 0.000381 \quad (3)$$

To calculate the minimum and maximum-reset delay time use Equation 4 and Equation 5, respectively.

$$t_{RST(min)} = 2.8862 \times C_{CRST} + 0.000381 \quad (4)$$

$$t_{RST(max)} = 3.64392 \times C_{CRST} + 0.000381 \quad (5)$$

The slope of Equation 3 is determined by the time the CRST charging current (I_{CRST}) takes to charge the external capacitor up to the CRST comparator threshold voltage (V_{CRST}). When $\overline{RESET}$ is asserted, the capacitor is discharged through the internal CRST pulldown resistor. When the $\overline{RESET}$ conditions are cleared, the internal precision current source is enabled and begins to charge the external capacitor; when V_{CRST} = 1.21 V, $\overline{RESET}$ is unasserted. Note that in order to minimize the difference between the calculated $\overline{RESET}$ delay time and the actual $\overline{RESET}$ delay time, use a use a high-quality ceramic dielectric COG, X5R, or X7R capacitor and minimize parasitic board capacitance around this pin. Table 3 lists the reset delay time ideal capacitor values for C_{CRST}.

Table 3. Reset Delay Time for Common Ideal Capacitor Values

C_{CRST}	$\overline{RESET}$ DELAY TIME (t_{RST})			UNIT
	MIN(1)	TYP	MAX(1)	
100 pF	0.67	0.70	0.75	ms
1 nF	3.27	3.61	4.02	ms
10 nF	29.2	32.6	36.8	ms
100 nF	289	323	364	ms
1 µF	2886	3227	3644	ms

(1) Minimum and maximum values are calculated using ideal capacitors.

8.1.2 CWD Functionality

The TPS3850 features three options for setting the watchdog window: connecting a capacitor to the CWD pin, connecting a pullup resistor to VDD, and leaving the CWD pin unconnected. Figure 29 shows a schematic drawing of all three options. If this pin is connected to VDD through a 10-kΩ pullup resistor or left unconnected (high impedance), then the factory-programmed watchdog timeouts are enabled; see the *Timing Requirements* table. Otherwise, the watchdog timeout can be adjusted by placing a capacitor from the CWD pin to ground.

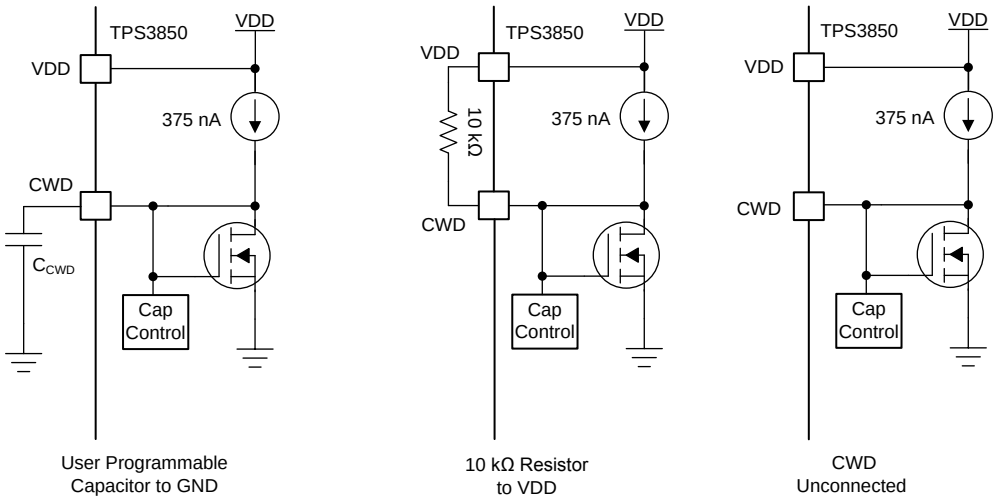

Figure 29. CWD Charging Circuit

Copyright © 2016, Texas Instruments Incorporated

8.1.2.1 Factory-Programmed Timing Options

If using the factory-programmed timing options (listed in Table 4), the CWD pin must either be unconnected or pulled up to VDD through a 10-kΩ pullup resistor. Using these options enables high-precision, 15% accurate watchdog timing.

Table 4. Factory-Programmed Watchdog Timing

INPUT			WATCHDOG LOWER BOUNDARY (t_{WDL})			WATCHDOG UPPER BOUNDARY (t_{WDU})			UNIT
CWD	SET0	SET1	MIN	TYP	MAX	MIN	TYP	MAX	
NC	0	0	19.1	22.5	25.9	46.8	55.0	63.3	ms
	0	1	1.5	1.85	2.2	22.0	27.5	33.0	ms
	1	0	Watchdog disabled			Watchdog disabled			
	1	1	680	800	920	1360	1600	1840	ms
10 kΩ to VDD	0	0	7.7	9.0	10.4	92.7	109.0	125.4	ms
	0	1	7.7	9.0	10.4	165.8	195.0	224.3	ms
	1	0	Watchdog disabled			Watchdog disabled			
	1	1	1.5	1.85	2.2	8.8	11.0	13.2	ms

8.1.2.2 Adjustable Capacitor Timing

Adjustable capacitor timing is achievable by connecting a capacitor to the CWD pin. If a capacitor is connected to CWD, then a 375-nA constant-current source charges C_{CWD} until V_{CWD} = 1.21 V. The TPS3850 determines the window watchdog upper boundary with the formula given in Equation 6, where C_{CWD} is in microfarads and t_{WDU} is in seconds.

$$t_{WDU(typ)} = 77.4 \times C_{CWD} + 0.055 \quad (6)$$

The TPS3850 is designed and tested using C_{CWD} capacitors between 100 pF and 1 µF. Note that Equation 6 is for ideal capacitors, capacitor tolerances cause the actual device timing to vary. For the most accurate timing, use ceramic capacitors with COG dielectric material. As shown in Table 5, when using the minimum capacitor of 100 pF, the watchdog upper boundary is 62.74 ms; whereas with a 1-µF capacitor, the watchdog upper boundary is 77.455 seconds. If a C_{CWD} capacitor is used, Equation 6 can be used to set t_{WDU} the window watchdog upper boundary. The window watchdog lower boundary is dependent on the SET0 and SET1 pins because these pins set the window watchdog ratio of the lower boundary to upper boundary; Table 6 shows how t_{WDU} can be used to calculate t_{WDL} based on the SET0 and SET1 pins.

Table 5. t_{WDU} Values for Common Ideal Capacitor Values

C_{CWD}	WATCHDOG UPPER BOUNDARY (t_{WDU})			UNIT
	MIN(1)	TYP	MAX(1)	
100 pF	53.32	62.74	72.15	ms
1 nF	112.5	132.4	152.2	ms
10 nF	704	829	953	ms
100 nF	6625	7795	8964	ms
1 µF	65836	77455	89073	ms

(1) Minimum and maximum values are calculated using ideal capacitors.

Table 6. Programmable CWD Timing

INPUT			WATCHDOG LOWER BOUNDARY (t_{WDL})			WATCHDOG UPPER BOUNDARY (t_{WDU})			UNIT
CWD	SET0	SET1	MIN	TYP	MAX	MIN	TYP	MAX	
C_{CWD}	0	0	$t_{WDU(min)}$ x 0.125	t_{WDU} x 0.125	$t_{WDU(max)}$ x 0.125	0.85 x $t_{WDU(typ)}$	$t_{WDU(typ)}$(1)	1.15 x $t_{WDU(typ)}$	s
	0	1	$t_{WDU(min)}$ x 0.75	t_{WDU} x 0.75	$t_{WDU(max)}$ x 0.75	0.85 x $t_{WDU(typ)}$	$t_{WDU(typ)}$(1)	1.15 x $t_{WDU(typ)}$	s
	1	0	Watchdog disabled			Watchdog disabled			
	1	1	$t_{WDU(min)}$ x 0.5	t_{WDU} x 0.5	$t_{WDU(max)}$ x 0.5	0.85 x $t_{WDU(typ)}$	$t_{WDU(typ)}$(1)	1.15 x $t_{WDU(typ)}$	s

(1) Calculated from Equation 6 using ideal capacitors.

Copyright © 2016, Texas Instruments Incorporated

8.1.3 Adjustable SENSE Configuration

The TPS3850H01 has an undervoltage supervisor that can monitor voltage rails greater than 0.4 V. Table 7 contains 1% resistor values for creating a voltage divider to monitor common rails from 0.5 V to 12 V with a threshold of 4% and 10%. These resistor values can be scaled to decrease the amount of current flowing through the resistor divider, but increasing the resistor values also decreases the accuracy of the resistor divider. General practice is for the current flowing through the resistor divider to be 100 times greater than the current going into the SENSE pin. This practice ensures the highest possible accuracy. Equation 7 can be used to calculate the resistors required in the resistor divider. Figure 30 shows the block diagram for adjustable operation.

$$V_{MON} = V_{IT(ADJ)} \times \left(1 + \frac{R_1}{R_2}\right) \quad (7)$$

Table 7. SENSE Resistor Divider Values

INPUT VOLTAGE (V)	4% THRESHOLD			10% THRESHOLD		
	R_1 (kΩ)	R_2 (kΩ)	THRESHOLD VOLTAGE (V)	R_1 (kΩ)	R_2 (kΩ)	THRESHOLD VOLTAGE (V)
0.5	16.2	80.6	0.48	10	80.6	0.45
0.8	75	80.6	0.77	64.9	80.6	0.72
0.9	93.1	80.6	0.86	82.5	80.6	0.81
1.2	150	80.6	1.14	137	80.6	1.08
1.8	267	80.6	1.73	249	80.6	1.64
2.5	402	80.6	2.40	374	80.6	2.26
3	499	80.6	2.88	464	80.6	2.70
3.3	562	80.6	3.19	523	80.6	2.99
5	887	80.6	4.80	825	80.6	4.49
12	2260	80.6	11.62	2100	80.6	10.82

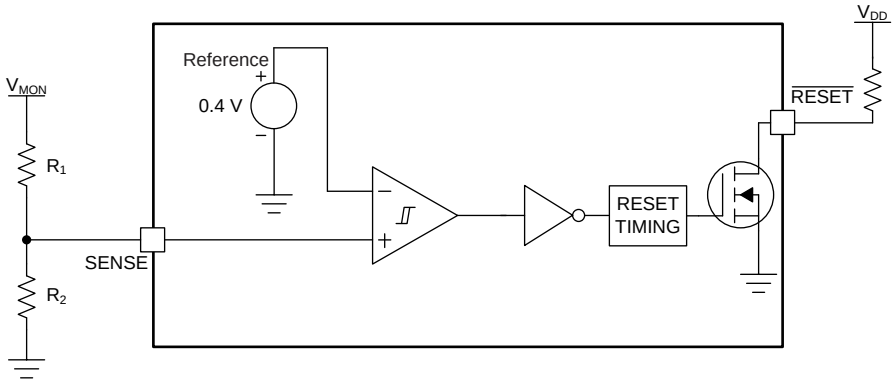

Figure 30. Adjustable Voltage Divider

Copyright © 2016, Texas Instruments Incorporated

8.1.4 Overdrive on the SENSE Pin

The propagation delay from exceeding the threshold to $\overline{\text{RESET}}$ being asserted is dependent on two conditions: the amplitude of the voltage on the SENSE pin relative to the threshold, (ΔV_1 and ΔV_2), and the length of time that the voltage is above or below the trip point (t_1 and t_2). If the voltage is just over the trip point for a long period of time, then $\overline{\text{RESET}}$ asserts and the output is pulled low. However, if the SENSE voltage is just over the trip point for a few nanoseconds, then the $\overline{\text{RESET}}$ does not assert and the output remains high. The time required for $\overline{\text{RESET}}$ to assert can be changed by increasing the time that the SENSE voltage goes over the trip point. Equation 8 shows how to calculate the percentage overdrive.

$$\text{Overdrive} = | (V_{SENSE} / V_{ITx} - 1) \times 100\% | \quad (8)$$

In Equation 8, V_{ITx} corresponds to the SENSE threshold trip point. If V_{SENSE} exceeds the positive threshold, then $V_{IT+(OV)}$ is used. $V_{IT-(UV)}$ is used when V_{SENSE} falls below the negative threshold. In Figure 31, t_1 and t_2 correspond to the amount of time that the SENSE voltage is over the threshold. The response time versus overdrive for $V_{IT+(OV)}$ and $V_{IT-(UV)}$ is illustrated in Figure 14 and Figure 17, respectively.

The TPS3850 is relatively immune to short positive and negative transients on the SENSE pin because of the overdrive voltage curve; see Figure 20 and Figure 21.

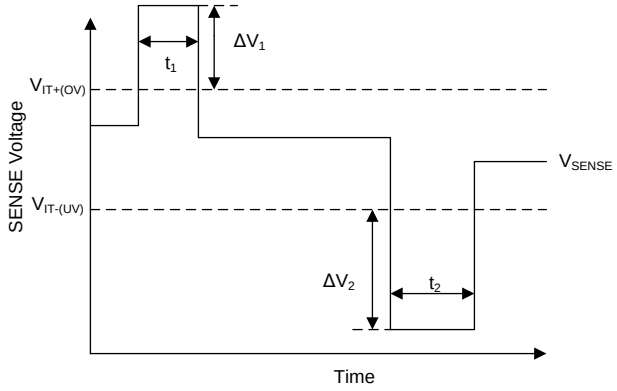

Figure 31. Overdrive Voltage on the SENSE Pin

8.2 Typical Applications

8.2.1 Design 1: Monitoring a 1.2-V Rail with Factory-Programmable Watchdog Timing

A typical application for the TPS3850 is shown in Figure 32. The TPS3850G12 is used to monitor the 1.2-V, V_{CORE} rail powering the microcontroller.

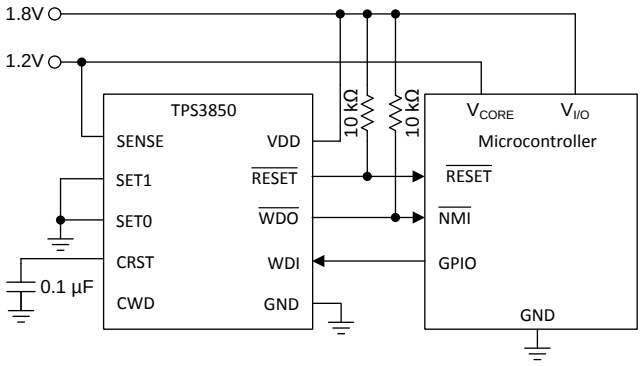

Figure 32. Monitoring Supply Voltage and Watchdog Supervision of a Microcontroller

8.2.1.1 Design Requirements

PARAMETER	DESIGN REQUIREMENT	DESIGN RESULT
Reset delay	Minimum reset delay of 250 ms	Minimum reset delay of 260 ms, reset delay of 322 ms (typical)
Watchdog window	Functions with a 200-Hz pulse-width modulation (PWM) signal with a 50% duty cycle	Leaving the CWD pin unconnected with SET0 = 0 and SET1 = 1 produces a window with a $t_{WDL(max)}$ of 2.2 ms and a $t_{WDU(min)}$ of 22 ms
Output logic voltage	1.8-V CMOS	1.8-V CMOS
Monitored rail	1.2 V within ±5%	Worst-case $V_{IT+(OV)}$ 1.257 V (4.8%)
		Worst-case $V_{IT-(UV)}$ 1.142 V (4.7%)
Maximum device current consumption	200 µA	10 µA of current consumption, typical worst-case of 199 µA when $\overline{WDO}$ or $\overline{RESET}$ is asserted

8.2.1.2 Detailed Design Procedure

8.2.1.2.1 Monitoring the 1.2-V Rail

The window comparator allows for precise voltage supervision of common rails between 0.9 V and 5.0 V. This application calls for very tight monitoring of the rail with only ±5% of variation allowed on the rail. To ensure this requirement is met, the TPS3850G12 was chosen for its ±4% thresholds. To calculate the worst-case for $V_{IT+(OV)}$ and $V_{IT-(UV)}$, the accuracy must also be taken into account. The worst-case for $V_{IT+(OV)}$ can be calculated by Equation 9:

$$V_{IT+(OV)(Worst\text{-}Case)} = V_{IT+(OV)typ} \times 1.048 = 1.2 \times 1.048 = 1.257\ V \quad (9)$$

The worst case for $V_{IT-(UV)}$ can be calculated using Equation 10:

$$V_{IT–(UV)(Worst\text{-}Case)} = V_{IT–(UV)typ} \times 0.952 = 1.2 \times 0.952 = 1.142\ V \quad (10)$$

Copyright © 2016, Texas Instruments Incorporated

8.2.1.2.2 Meeting the Minimum Reset Delay

The TPS3850 features three options for setting the reset delay: connecting a capacitor to the CRST pin, connecting a pullup resistor, and leaving the CRST pin unconnected. If the CRST pin is either unconnected or pulled up the minimum timing requirement cannot be met, thus an external capacitor must be connected to the CRST pin. Because a minimum time is required, the worst-case scenario is a supervisor with a high CRST charging current (I_{CRST}) and a low CRST comparator threshold (V_{CRST}). For applications with ambient temperatures ranging from –40°C to +125°C, C_{CRST} can be calculated using $I_{CRST(MAX)}$, $V_{CRST(MIN)}$, and solving for C_{CRST} in Equation 11:

$$C_{RST(min)_ideal} = \frac{t_{RST(min)} - 0.000381}{2.8862} = \frac{0.25 - 0.000381}{2.8862} \quad (11)$$

When solving Equation 11, the minimum capacitance required at the CRST pin is 0.086 µF. If standard capacitors with ±10% tolerances are used, then the minimum CRST capacitor required can be found in Equation 12:

$$C_{RST(min)} = \frac{C_{RST(min)_ideal}}{1 - C_{tolerance}} = \frac{0.086\ \mu F}{1 - 0.1} \quad (12)$$

Solving Equation 12 where $C_{tolerance}$ is 0.1 or 10%, the minimum C_{CRST} capacitor is 0.096 µF. This value is then rounded up to the nearest standard capacitor value, so a 0.1-µF capacitor must be used to achieve this reset delay timing. If voltage and temperature derating are being considered, then also include these values in $C_{tolerance}$.

8.2.1.2.3 Setting the Watchdog Window

In this application, the window watchdog timing options are based on the PWM signal that is provided to the TPS3850. A window watchdog setting must be chosen such that the falling edge of the PWM signal always falls within the window. A nominal window must be designed with $t_{WDL(max)}$ less than 5 ms and $t_{WDU(min)}$ greater than 5 ms. There are several options that satisfy this window option. An external capacitor can be placed on the CWD pin and calculated to have a sufficient window. Another option is to use one of the factory-programmed timing options, which ensures a ±15% accuracy from the nominal value. An additional advantage of choosing one of the factory-programmed options is the ability to reduce the number of components required, thus reducing overall BOM cost. Leaving the CWD pin unconnected (NC) with SET0 = 0 and SET1 = 1 produces a $t_{WDL(max)}$ of 2.2 ms and a $t_{WDU(min)}$ of 22 ms; see Figure 37.

Copyright © 2016, Texas Instruments Incorporated

8.2.1.2.4 Calculating the $\overline{\text{RESET}}$ and $\overline{\text{WDO}}$ Pullup Resistor

The TPS3850 uses an open-drain configuration for the $\overline{\text{RESET}}$ circuit, as shown in Figure 33. When the FET is off, the resistor pulls the drain of the transistor to VDD and when the FET is turned on, the FET attempts to pull the drain to ground, thus creating an effective resistor divider. The resistors in this divider must be chosen to ensure that V_{OL} is below its maximum value. To choose the proper pullup resistor, there are three key specifications to keep in mind: the pullup voltage (V_{PU}), the recommended maximum $\overline{\text{RESET}}$ pin current (I_{RST}), and V_{OL}. The maximum V_{OL} is 0.4 V, meaning that the effective resistor divider created must be able to bring the voltage on the reset pin below 0.4 V with I_{RST} kept below 10 mA. For this example, with a V_{PU} of 1.8 V, a resistor must be chosen to keep I_{RST} below 200 μA because this value is the maximum consumption current allowed. To ensure this specification is met, a pullup resistor value of 10 kΩ was selected, which sinks a maximum of 180 μA when $\overline{\text{RESET}}$ or $\overline{\text{WDO}}$ is asserted. As illustrated in Figure 12, the $\overline{\text{RESET}}$ current is at 180 μA and the low-level output voltage is approximately zero.

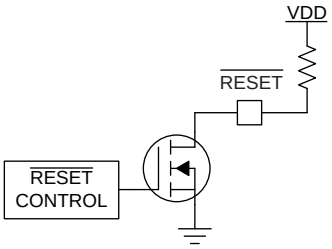

Figure 33. Open-Drain $\overline{\text{RESET}}$ Configuration

Copyright © 2016, Texas Instruments Incorporated

8.2.1.3 Application Curves

Unless otherwise stated, application curves were taken at T_A = 25°C.

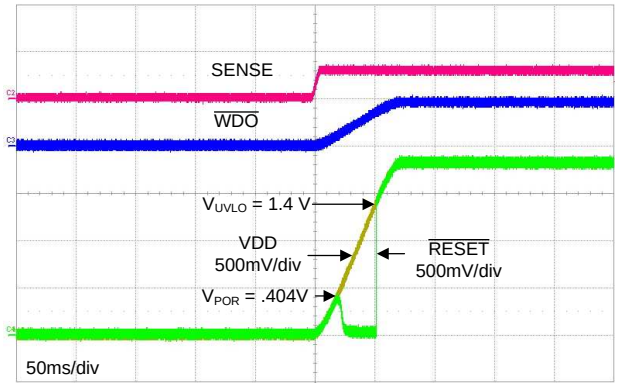

Figure 34. Startup Waveform

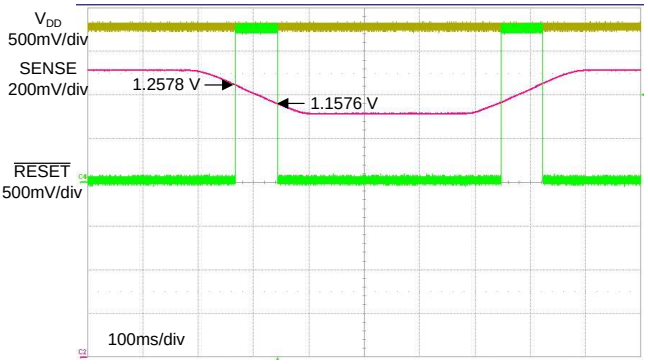

Figure 35. Window Comparator Thresholds Entering a Valid Window

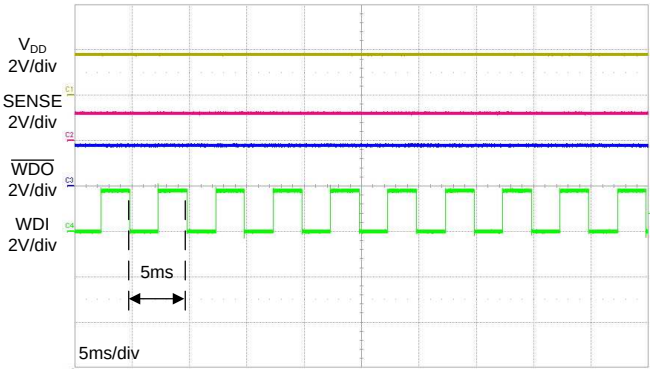

Figure 36. 200-Hz WDI Pulse

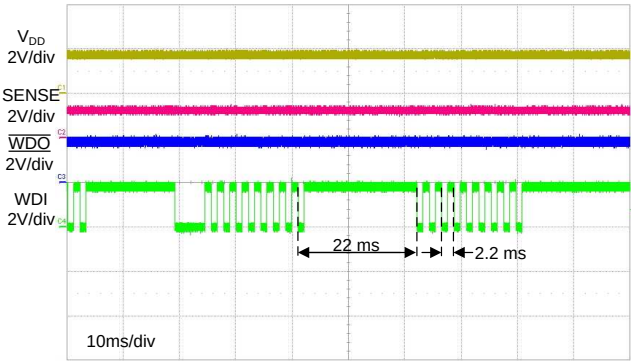

Figure 37. Window Watchdog Timing

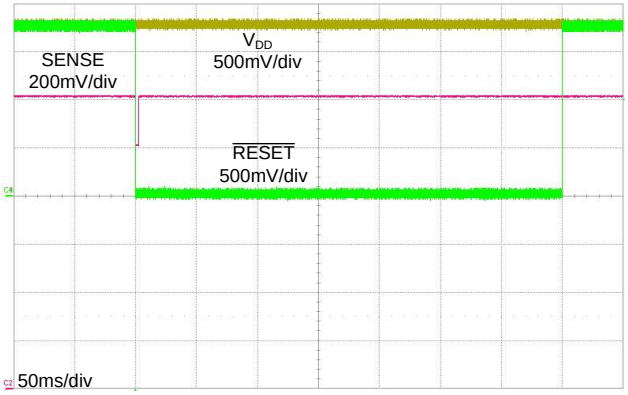

Figure 38. Typical $\overline{\text{RESET}}$ Delay Timing

8.2.2 Design 2: Using TPS3850H01 to monitor a 0.7-V Rail With an Adjustable Window Watchdog Timing

A typical application for the TPS3850H01 is shown in Figure 39.

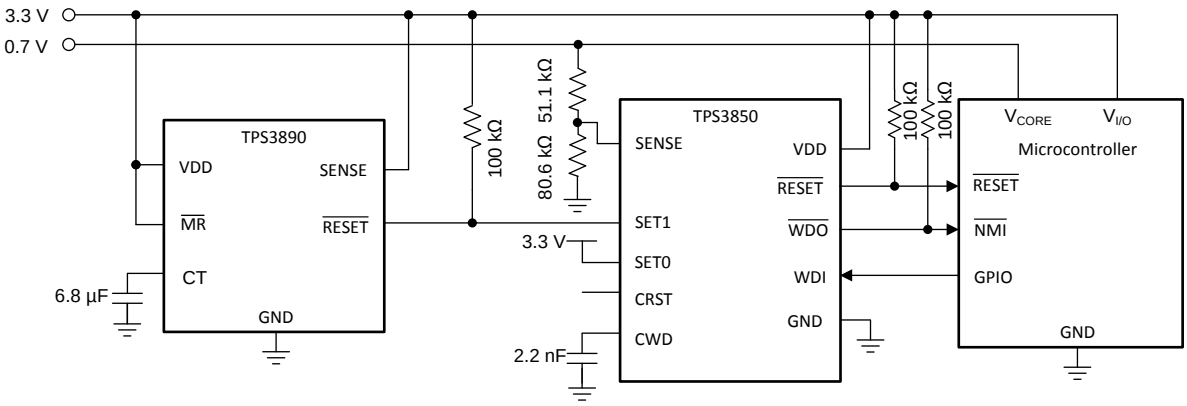

Copyright © 2016, Texas Instruments Incorporated

Figure 39. Monitoring Supply Voltage and Watchdog Supervision of a Microcontroller

8.2.2.1 Design Requirements

PARAMETER	DESIGN REQUIREMENT	DESIGN RESULT
Reset delay	Minimum $\overline{\text{RESET}}$ delay of 150 ms	Minimum $\overline{\text{RESET}}$ delay of 170 ms
Watchdog disable for initialization period	Watchdog must remain disabled for 7 seconds until logic enables the watchdog timer	7.21 seconds (typ)
Watchdog window	250 ms, maximum	$t_{WDL(max)}$ = 135 ms, $t_{WDU(min)}$ = 181 ms
Output logic voltage	3.3-V CMOS	3.3-V CMOS
Monitored rail	0.7 V, with 7% threshold	$V_{ITN\ (max)}$ 0.667 V (–4.7%)
		$V_{ITN\ (typ)}$ 0.65 V (–6.6%)
		$V_{ITN\ (min)}$ 0.641 V (–8.5%)
Maximum device current consumption	50 µA	10 µA of current consumption typical, worst-case of 52 µA when $\overline{\text{WDO}}$ or $\overline{\text{RESET}}$ is asserted(1)

(1) Only includes the current consumption of the TPS3850.

8.2.2.2 Detailed Design Procedure

8.2.2.2.1 Meeting the Minimum Reset Delay

The design goal for the $\overline{\text{RESET}}$ delay time can be achieved by either using an external capacitor or the CRST pin can be left unconnected. In order to minimize component count, the CRST pin is left unconnected. For CRST = NC, the minimum delay is 170 ms, which is greater than the minimum required $\overline{\text{RESET}}$ delay of 150 ms.

8.2.2.2.2 Setting the Window Watchdog

As illustrated in Figure 29, there are three options for setting the window watchdog. The design specifications in this application require the programmable timing option (external capacitor connected to CWD). When a capacitor is connected to the CWD pin, the window is governed by Equation 13. Equation 13 is only valid for ideal capacitors, any temperature or voltage derating must be accounted for separately.

$$C_{CWD}\left(\mu F\right) = \frac{t_{WDU} - 0.055}{77.4} = \frac{0.25 - 0.055}{77.4} = 0.0025\ \mu F \quad (13)$$

Copyright © 2016, Texas Instruments Incorporated

The nearest standard capacitor value to 2.5 nF is 2.2 nF. Selecting 2.2 nF for the C_{CWD} capacitor gives the following minimum and maximum timing parameters:

$$t_{WDU(MIN)} = 0.85 \times t_{WDU(TYP)} = 0.85 \times \left(77.4 \times 2.2 \times 10^{-3} + 0.055\right) = 191 \text{ ms} \quad (14)$$

$$t_{WDL(MAX)} = 0.5 \times t_{WDU(MAX)} = 0.5 \times \left[1.15 \times \left(77.4 \times 2.2 \times 10^{-3} + 0.055\right)\right] = 129 \text{ ms} \quad (15)$$

Capacitor tolerance also influence $t_{WDU(MIN)}$ and $t_{WDL(MAX)}$. Select a ceramic COG dielectric capacitor for high accuracy. For 2.2 nF, COG capacitors are readily available with a 5% tolerance, which results in a 5% decrease in $t_{WDU(MIN)}$ and a 5% increase in $t_{WDL(MAX)}$, giving 181 ms and 135 ms, respectively. A falling edge must be issued within this window.

8.2.2.2.3 Watchdog Disabled During the Initialization Period

The watchdog is often needed to be disabled during startup to allow for an initialization period. When the initialization period is over, the watchdog timer is turned back on to allow the microcontroller to be monitored by the TPS3850. To achieve this setup, SET0 must start at VDD and SET1 must start at GND. In this design, SET0 is simply tied to VDD and SET1 is controlled by a TPS3890 supervisor. In this application, the TPS3890 was chosen to monitor V_{DD} as well, which means that $\overline{\text{RESET}}$ on the TPS3890 stays low until V_{DD} rises above V_{ITN}. When V_{DD} comes up, the delay time can be adjusted through the CT capacitor on the TPS3890. With this approach, the $\overline{\text{RESET}}$ delay can be adjusted from a minimum of 25 µs to a maximum of 30 seconds. For this design, a minimum delay of 7 seconds is needed until the watchdog timer is enabled. The CT capacitor calculation (see the TPS3890 data sheet) yields an ideal capacitance of 6.59 µF, giving a closest standard ceramic capacitor value of 6.8 µF. When connecting a 6.8-µF capacitor from CT to GND, the typical delay time is 7.21 seconds. Figure 40 illustrates the typical startup waveform for this circuit when the watchdog input is off. Figure 40 illustrates that when the watchdog is disabled, the $\overline{\text{WDO}}$ output remains high. See the TPS3890 data sheet for detailed information on the TPS3890.

8.2.2.2.4 Calculating the Sense Resistor

There are three key specifications to keep in mind when calculating the resistor divider values (R_1 and R_2, see Figure 24 or Figure 30): voltage threshold ($V_{IT(ADJ)}$), resistor tolerance, and the SENSE pin current (I_{SENSE}). To ensure that no accuracy is lost because of I_{SENSE}, the current through the resistor divider must be 100 times greater than I_{SENSE}. Starting with R_2 = 80.6 kΩ provides a 5-µA resistor divider current when V_{SENSE} = 0.4 V. To calculate the nominal resistor values, use Equation 16:

$$V_{ITN} = V_{IT(ADJ)} + R_1 \frac{V_{IT(ADJ)}}{R_2}$$

where

- V_{ITN} is the monitored falling threshold voltage and
- $V_{IT(ADJ)}$ is the threshold voltage on the SENSE pin (16)

Solving Equation 16 for R_1 gives the nearest 1% resistor of 51.1 kΩ. Now, plug R_1 back into Equation 16 to get the monitored threshold. With these resistor values, the nominal threshold is 0.65 V or 6.6%.

In order to calculate the minimum and maximum threshold variation including the tolerances of the resistors, threshold voltage, and sense current, use Equation 17 and Equation 18.

$$V_{ITN(min)} = V_{IT(ADJ)min} + R_{1(min)} \frac{V_{IT(ADJ)min}}{R_{2(max)} + I_{SENSE(min)}} = 0.641 \text{ V} \quad (17)$$

$$V_{ITN(max)} = V_{IT(ADJ)max} + R_{1(max)} \frac{V_{IT(ADJ)max}}{R_{2(min)} + I_{SENSE(max)}} = 0.667 \text{ V}$$

where

- V_{ITN} is the falling monitored threshold voltage
- $V_{IT(ADJ)}$ is the sense voltage threshold and
- I_{SENSE} is the sense pin current (18)

The calculated tolerance on R_1 and R_2 is 1%.

Copyright © 2016, Texas Instruments Incorporated

8.2.2.3 Application Curves

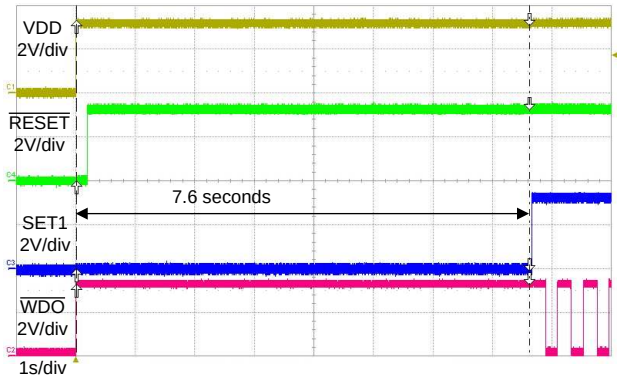

Figure 40. Startup Without a WDI Signal

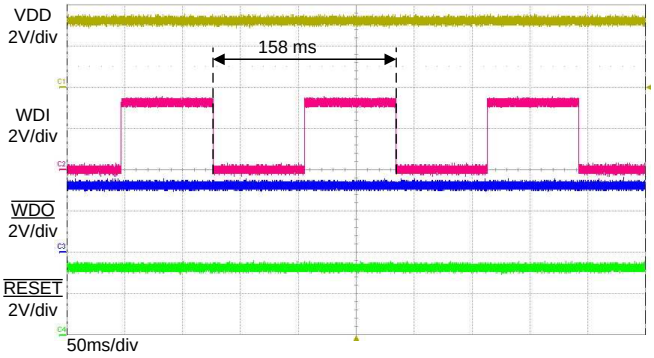

Figure 41. Typical WDI Signal

9 Power Supply Recommendations

This device is designed to operate from an input supply with a voltage range between 1.6 V and 6.5 V. An input supply capacitor is not required for this device; however, if the input supply is noisy, then good analog practice is to place a 0.1-µF capacitor between the VDD pin and the GND pin.

10 Layout

10.1 Layout Guidelines

Make sure that the connection to the VDD pin is low impedance. Good analog design practice recommends placing a 0.1-µF ceramic capacitor as near as possible to the VDD pin. If a capacitor is not connected to the CRST pin, then minimize parasitic capacitance on this pin so the RESET delay time is not adversely affected.

- Make sure that the connection to the VDD pin is low impedance. Good analog design practice is to place a 0.1-µF ceramic capacitor as near as possible to the VDD pin.
- If a C_{CRST} capacitor or pullup resistor is used, place these components as close as possible to the CRST pin. If the CRST pin is left unconnected, make sure to minimize the amount of parasitic capacitance on the pin.
- If a C_{CWD} capacitor or pullup resistor is used, place these components as close as possible to the CWD pin. If the CWD pin is left unconnected, make sure to minimize the amount of parasitic capacitance on the pin.
- Place the pullup resistors on RESET and WDO as close to the pin as possible.

10.2 Layout Example

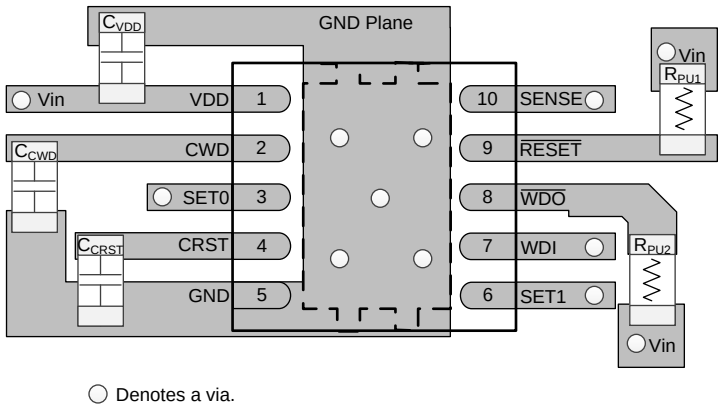

Figure 42. Typical Layout for the TPS3850

Copyright © 2016, Texas Instruments Incorporated

11 Device and Documentation Support

11.1 Device Support

11.1.1 Device Nomenclature

Table 8. Device Nomenclature

DESCRIPTION	NOMENCLATURE	VALUE
TPS3850 (high-accuracy supervisor with window watchdog)	—	—
X (nominal thresholds as a percent of the nominal monitored voltage)	G	$V_{IT+(OV)}$ = 4%; $V_{IT–(UV)}$ = –4%
	H	$V_{IT+(OV)}$ = 7%; $V_{IT–(UV)}$ = –7%
yy(y) (nominal monitored voltage option)	01	0.4 V
	09	0.9 V
	115	1.15 V
	12	1.2 V
	18	1.8 V
	25	2.5 V
	30	3.0 V
	33	3.3 V
	50	5.0 V

11.2 Documentation Support

11.2.1 Related Documentation

For related documentation see the following:

- *TPS3890 Low Quiescent Current, 1% Accurate Supervisor with Programmable Delay* (SLVSD65)
- *Optimizing Resistor Dividers at a Comparator Input* application report (SLVA450)
- *TPS3850EVM-781 Evaluation Module* (SBVU032)

11.3 Receiving Notification of Documentation Updates

To receive notification of documentation updates, navigate to the device product folder on ti.com. In the upper right corner, click on *Alert me* to register and receive a weekly digest of any product information that has changed. For change details, review the revision history included in any revised document.

11.4 Community Resources

The following links connect to TI community resources. Linked contents are provided "AS IS" by the respective contributors. They do not constitute TI specifications and do not necessarily reflect TI's views; see TI's Terms of Use.

TI E2E™ Online Community ***TI's Engineer-to-Engineer (E2E) Community.*** Created to foster collaboration among engineers. At e2e.ti.com, you can ask questions, share knowledge, explore ideas and help solve problems with fellow engineers.

Design Support ***TI's Design Support*** Quickly find helpful E2E forums along with design support tools and contact information for technical support.

11.5 Trademarks

E2E is a trademark of Texas Instruments.
All other trademarks are the property of their respective owners.

Copyright © 2016, Texas Instruments Incorporated

11.6 Electrostatic Discharge Caution



This integrated circuit can be damaged by ESD. Texas Instruments recommends that all integrated circuits be handled with appropriate precautions. Failure to observe proper handling and installation procedures can cause damage.

ESD damage can range from subtle performance degradation to complete device failure. Precision integrated circuits may be more susceptible to damage because very small parametric changes could cause the device not to meet its published specifications.

11.7 Glossary

SLYZ022 — *TI Glossary*.

This glossary lists and explains terms, acronyms, and definitions.

12 Mechanical, Packaging, and Orderable Information

The following pages include mechanical, packaging, and orderable information. This information is the most current data available for the designated devices. This data is subject to change without notice and revision of this document. For browser-based versions of this data sheet, refer to the left-hand navigation.

Copyright © 2016, Texas Instruments Incorporated

PACKAGING INFORMATION

Orderable Device	Status (1)	Package Type	Package Drawing	Pins	Package Qty	Eco Plan (2)	Lead/Ball Finish (6)	MSL Peak Temp (3)	Op Temp (°C)	Device Marking (4/5)	Samples
TPS3850G12DRCR	ACTIVE	VSON	DRC	10	3000	Green (RoHS & no Sb/Br)	NIPDAU	Level-2-260C-1 YEAR	-40 to 125	850CA	Samples
TPS3850G12DRCT	ACTIVE	VSON	DRC	10	250	Green (RoHS & no Sb/Br)	NIPDAU	Level-2-260C-1 YEAR	-40 to 125	850CA	Samples
TPS3850G18DRCR	ACTIVE	VSON	DRC	10	3000	Green (RoHS & no Sb/Br)	NIPDAU	Level-2-260C-1 YEAR	-40 to 125	850DA	Samples
TPS3850G18DRCT	ACTIVE	VSON	DRC	10	250	Green (RoHS & no Sb/Br)	NIPDAU	Level-2-260C-1 YEAR	-40 to 125	850DA	Samples
TPS3850G30DRCR	ACTIVE	VSON	DRC	10	3000	Green (RoHS & no Sb/Br)	NIPDAU	Level-2-260C-1 YEAR	-40 to 125	850FA	Samples
TPS3850G30DRCT	ACTIVE	VSON	DRC	10	250	Green (RoHS & no Sb/Br)	NIPDAU	Level-2-260C-1 YEAR	-40 to 125	850FA	Samples
TPS3850G33DRCR	ACTIVE	VSON	DRC	10	3000	Green (RoHS & no Sb/Br)	NIPDAU	Level-2-260C-1 YEAR	-40 to 125	850GA	Samples
TPS3850G33DRCT	ACTIVE	VSON	DRC	10	250	Green (RoHS & no Sb/Br)	NIPDAU	Level-2-260C-1 YEAR	-40 to 125	850GA	Samples
TPS3850G50DRCR	ACTIVE	VSON	DRC	10	3000	Green (RoHS & no Sb/Br)	NIPDAU	Level-2-260C-1 YEAR	-40 to 125	850HA	Samples
TPS3850G50DRCT	ACTIVE	VSON	DRC	10	250	Green (RoHS & no Sb/Br)	NIPDAU	Level-2-260C-1 YEAR	-40 to 125	850HA	Samples
TPS3850H01DRCR	ACTIVE	VSON	DRC	10	3000	Green (RoHS & no Sb/Br)	NIPDAU	Level-2-260C-1 YEAR	-40 to 125	850AA	Samples
TPS3850H01DRCT	ACTIVE	VSON	DRC	10	250	Green (RoHS & no Sb/Br)	NIPDAU	Level-2-260C-1 YEAR	-40 to 125	850AA	Samples
TPS3850H12DRCR	ACTIVE	VSON	DRC	10	3000	Green (RoHS & no Sb/Br)	NIPDAU	Level-2-260C-1 YEAR	-40 to 125	850KA	Samples
TPS3850H12DRCT	ACTIVE	VSON	DRC	10	250	Green (RoHS & no Sb/Br)	NIPDAU	Level-2-260C-1 YEAR	-40 to 125	850KA	Samples
TPS3850H18DRCR	ACTIVE	VSON	DRC	10	3000	Green (RoHS & no Sb/Br)	NIPDAU	Level-2-260C-1 YEAR	-40 to 125	850LA	Samples
TPS3850H18DRCT	ACTIVE	VSON	DRC	10	250	Green (RoHS & no Sb/Br)	NIPDAU	Level-2-260C-1 YEAR	-40 to 125	850LA	Samples
TPS3850H30DRCR	ACTIVE	VSON	DRC	10	3000	Green (RoHS & no Sb/Br)	NIPDAU	Level-2-260C-1 YEAR	-40 to 125	850NA	Samples

Orderable Device	Status (1)	Package Type	Package Drawing	Pins	Package Qty	Eco Plan (2)	Lead/Ball Finish (6)	MSL Peak Temp (3)	Op Temp (°C)	Device Marking (4/5)	Samples
TPS3850H30DRCT	ACTIVE	VSON	DRC	10	250	Green (RoHS & no Sb/Br)	NIPDAU	Level-2-260C-1 YEAR	-40 to 125	850NA	Samples
TPS3850H33DRCR	ACTIVE	VSON	DRC	10	3000	Green (RoHS & no Sb/Br)	NIPDAU	Level-2-260C-1 YEAR	-40 to 125	850PA	Samples
TPS3850H33DRCT	ACTIVE	VSON	DRC	10	250	Green (RoHS & no Sb/Br)	NIPDAU	Level-2-260C-1 YEAR	-40 to 125	850PA	Samples
TPS3850H50DRCR	ACTIVE	VSON	DRC	10	3000	Green (RoHS & no Sb/Br)	NIPDAU	Level-2-260C-1 YEAR	-40 to 125	850RA	Samples
TPS3850H50DRCT	ACTIVE	VSON	DRC	10	250	Green (RoHS & no Sb/Br)	NIPDAU	Level-2-260C-1 YEAR	-40 to 125	850RA	Samples

(1) The marketing status values are defined as follows:
ACTIVE: Product device recommended for new designs.
LIFEBUY: TI has announced that the device will be discontinued, and a lifetime-buy period is in effect.
NRND: Not recommended for new designs. Device is in production to support existing customers, but TI does not recommend using this part in a new design.
PREVIEW: Device has been announced but is not in production. Samples may or may not be available.
OBSOLETE: TI has discontinued the production of the device.

(2) **RoHS:** TI defines "RoHS" to mean semiconductor products that are compliant with the current EU RoHS requirements for all 10 RoHS substances, including the requirement that RoHS substance do not exceed 0.1% by weight in homogeneous materials. Where designed to be soldered at high temperatures, "RoHS" products are suitable for use in specified lead-free processes. TI may reference these types of products as "Pb-Free".
RoHS Exempt: TI defines "RoHS Exempt" to mean products that contain lead but are compliant with EU RoHS pursuant to a specific EU RoHS exemption.
Green: TI defines "Green" to mean the content of Chlorine (Cl) and Bromine (Br) based flame retardants meet JS709B low halogen requirements of <=1000ppm threshold. Antimony trioxide based flame retardants must also meet the <=1000ppm threshold requirement.

(3) MSL, Peak Temp. - The Moisture Sensitivity Level rating according to the JEDEC industry standard classifications, and peak solder temperature.

(4) There may be additional marking, which relates to the logo, the lot trace code information, or the environmental category on the device.

(5) Multiple Device Markings will be inside parentheses. Only one Device Marking contained in parentheses and separated by a "~" will appear on a device. If a line is indented then it is a continuation of the previous line and the two combined represent the entire Device Marking for that device.

(6) Lead/Ball Finish - Orderable Devices may have multiple material finish options. Finish options are separated by a vertical ruled line. Lead/Ball Finish values may wrap to two lines if the finish value exceeds the maximum column width.

Important Information and Disclaimer: The information provided on this page represents TI's knowledge and belief as of the date that it is provided. TI bases its knowledge and belief on information provided by third parties, and makes no representation or warranty as to the accuracy of such information. Efforts are underway to better integrate information from third parties. TI has taken and

continues to take reasonable steps to provide representative and accurate information but may not have conducted destructive testing or chemical analysis on incoming materials and chemicals. TI and TI suppliers consider certain information to be proprietary, and thus CAS numbers and other limited information may not be available for release.

In no event shall TI's liability arising out of such information exceed the total purchase price of the TI part(s) at issue in this document sold by TI to Customer on an annual basis.

OTHER QUALIFIED VERSIONS OF TPS3850 :

- Automotive: TPS3850-Q1

NOTE: Qualified Version Definitions:

- Automotive - Q100 devices qualified for high-reliability automotive applications targeting zero defects

TAPE AND REEL INFORMATION

REEL DIMENSIONS

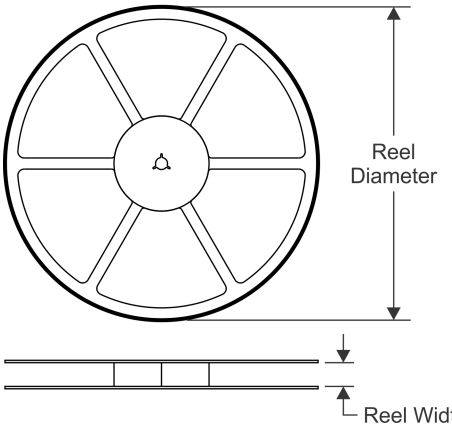

TAPE DIMENSIONS

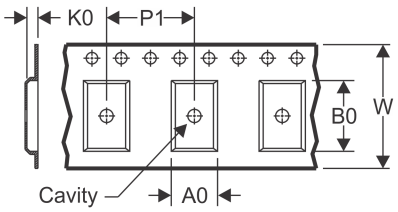

A0	Dimension designed to accommodate the component width
B0	Dimension designed to accommodate the component length
K0	Dimension designed to accommodate the component thickness
W	Overall width of the carrier tape
P1	Pitch between successive cavity centers

QUADRANT ASSIGNMENTS FOR PIN 1 ORIENTATION IN TAPE

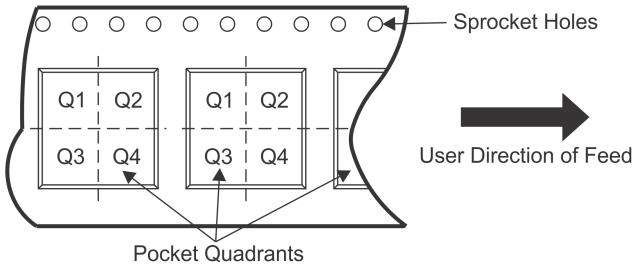

*All dimensions are nominal

Device	Package Type	Package Drawing	Pins	SPQ	Reel Diameter (mm)	Reel Width W1 (mm)	A0 (mm)	B0 (mm)	K0 (mm)	P1 (mm)	W (mm)	Pin1 Quadrant
TPS3850G12DRCR	VSON	DRC	10	3000	330.0	12.4	3.3	3.3	1.1	8.0	12.0	Q2
TPS3850G12DRCT	VSON	DRC	10	250	180.0	12.4	3.3	3.3	1.1	8.0	12.0	Q2
TPS3850G18DRCR	VSON	DRC	10	3000	330.0	12.4	3.3	3.3	1.1	8.0	12.0	Q2
TPS3850G18DRCT	VSON	DRC	10	250	180.0	12.4	3.3	3.3	1.1	8.0	12.0	Q2
TPS3850G30DRCR	VSON	DRC	10	3000	330.0	12.4	3.3	3.3	1.1	8.0	12.0	Q2
TPS3850G30DRCT	VSON	DRC	10	250	180.0	12.4	3.3	3.3	1.1	8.0	12.0	Q2
TPS3850G33DRCR	VSON	DRC	10	3000	330.0	12.4	3.3	3.3	1.1	8.0	12.0	Q2
TPS3850G33DRCT	VSON	DRC	10	250	180.0	12.4	3.3	3.3	1.1	8.0	12.0	Q2
TPS3850G50DRCR	VSON	DRC	10	3000	330.0	12.4	3.3	3.3	1.1	8.0	12.0	Q2
TPS3850G50DRCT	VSON	DRC	10	250	180.0	12.4	3.3	3.3	1.1	8.0	12.0	Q2
TPS3850H01DRCR	VSON	DRC	10	3000	330.0	12.4	3.3	3.3	1.1	8.0	12.0	Q2
TPS3850H01DRCT	VSON	DRC	10	250	180.0	12.4	3.3	3.3	1.1	8.0	12.0	Q2
TPS3850H12DRCR	VSON	DRC	10	3000	330.0	12.4	3.3	3.3	1.1	8.0	12.0	Q2
TPS3850H12DRCT	VSON	DRC	10	250	180.0	12.4	3.3	3.3	1.1	8.0	12.0	Q2
TPS3850H18DRCR	VSON	DRC	10	3000	330.0	12.4	3.3	3.3	1.1	8.0	12.0	Q2
TPS3850H18DRCT	VSON	DRC	10	250	180.0	12.4	3.3	3.3	1.1	8.0	12.0	Q2
TPS3850H30DRCR	VSON	DRC	10	3000	330.0	12.4	3.3	3.3	1.1	8.0	12.0	Q2
TPS3850H30DRCT	VSON	DRC	10	250	180.0	12.4	3.3	3.3	1.1	8.0	12.0	Q2

Device	Package Type	Package Drawing	Pins	SPQ	Reel Diameter (mm)	Reel Width W1 (mm)	A0 (mm)	B0 (mm)	K0 (mm)	P1 (mm)	W (mm)	Pin1 Quadrant
TPS3850H33DRCR	VSON	DRC	10	3000	330.0	12.4	3.3	3.3	1.1	8.0	12.0	Q2
TPS3850H33DRCT	VSON	DRC	10	250	180.0	12.4	3.3	3.3	1.1	8.0	12.0	Q2
TPS3850H50DRCR	VSON	DRC	10	3000	330.0	12.4	3.3	3.3	1.1	8.0	12.0	Q2
TPS3850H50DRCT	VSON	DRC	10	250	180.0	12.4	3.3	3.3	1.1	8.0	12.0	Q2

TAPE AND REEL BOX DIMENSIONS

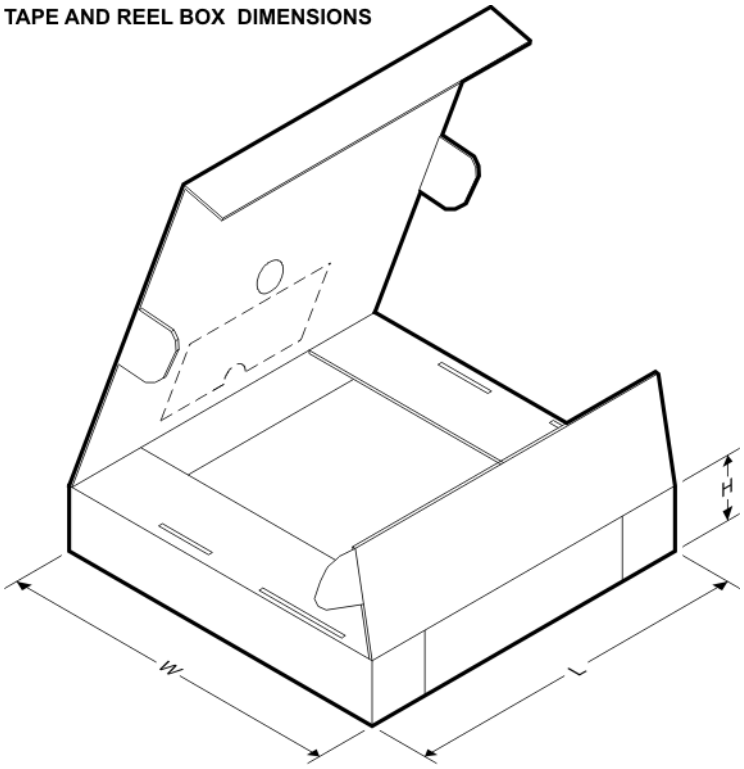

*All dimensions are nominal

Device	Package Type	Package Drawing	Pins	SPQ	Length (mm)	Width (mm)	Height (mm)
TPS3850G12DRCR	VSON	DRC	10	3000	367.0	367.0	35.0
TPS3850G12DRCT	VSON	DRC	10	250	210.0	185.0	35.0
TPS3850G18DRCR	VSON	DRC	10	3000	367.0	367.0	35.0
TPS3850G18DRCT	VSON	DRC	10	250	210.0	185.0	35.0
TPS3850G30DRCR	VSON	DRC	10	3000	367.0	367.0	35.0
TPS3850G30DRCT	VSON	DRC	10	250	210.0	185.0	35.0
TPS3850G33DRCR	VSON	DRC	10	3000	367.0	367.0	35.0
TPS3850G33DRCT	VSON	DRC	10	250	210.0	185.0	35.0
TPS3850G50DRCR	VSON	DRC	10	3000	367.0	367.0	35.0
TPS3850G50DRCT	VSON	DRC	10	250	210.0	185.0	35.0
TPS3850H01DRCR	VSON	DRC	10	3000	367.0	367.0	35.0
TPS3850H01DRCT	VSON	DRC	10	250	210.0	185.0	35.0
TPS3850H12DRCR	VSON	DRC	10	3000	367.0	367.0	35.0

Device	Package Type	Package Drawing	Pins	SPQ	Length (mm)	Width (mm)	Height (mm)
TPS3850H12DRCT	VSON	DRC	10	250	210.0	185.0	35.0
TPS3850H18DRCR	VSON	DRC	10	3000	367.0	367.0	35.0
TPS3850H18DRCT	VSON	DRC	10	250	210.0	185.0	35.0
TPS3850H30DRCR	VSON	DRC	10	3000	367.0	367.0	35.0
TPS3850H30DRCT	VSON	DRC	10	250	210.0	185.0	35.0
TPS3850H33DRCR	VSON	DRC	10	3000	367.0	367.0	35.0
TPS3850H33DRCT	VSON	DRC	10	250	210.0	185.0	35.0
TPS3850H50DRCR	VSON	DRC	10	3000	367.0	367.0	35.0
TPS3850H50DRCT	VSON	DRC	10	250	210.0	185.0	35.0

DRC 10

VSON - 1 mm max height

PLASTIC SMALL OUTLINE - NO LEAD

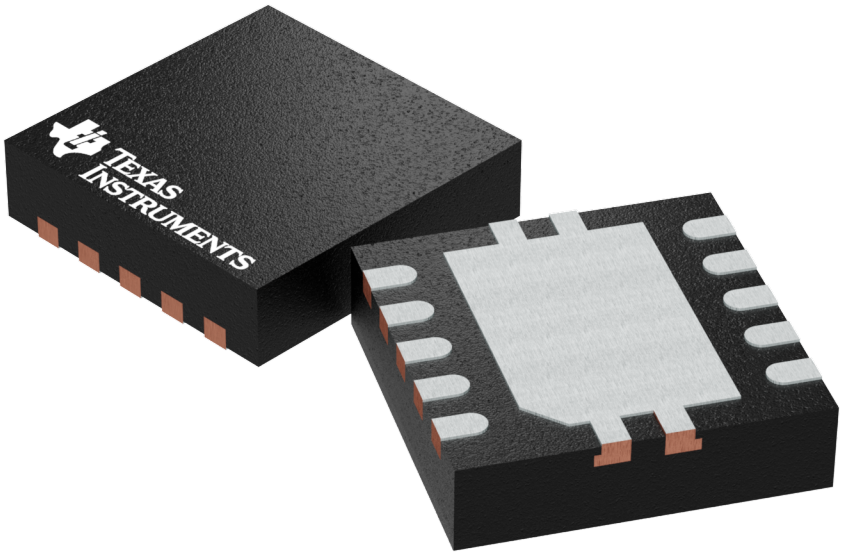

Images above are just a representation of the package family, actual package may vary.
Refer to the product data sheet for package details.

DRC0010J

PACKAGE OUTLINE

VSON - 1 mm max height

PLASTIC SMALL OUTLINE - NO LEAD

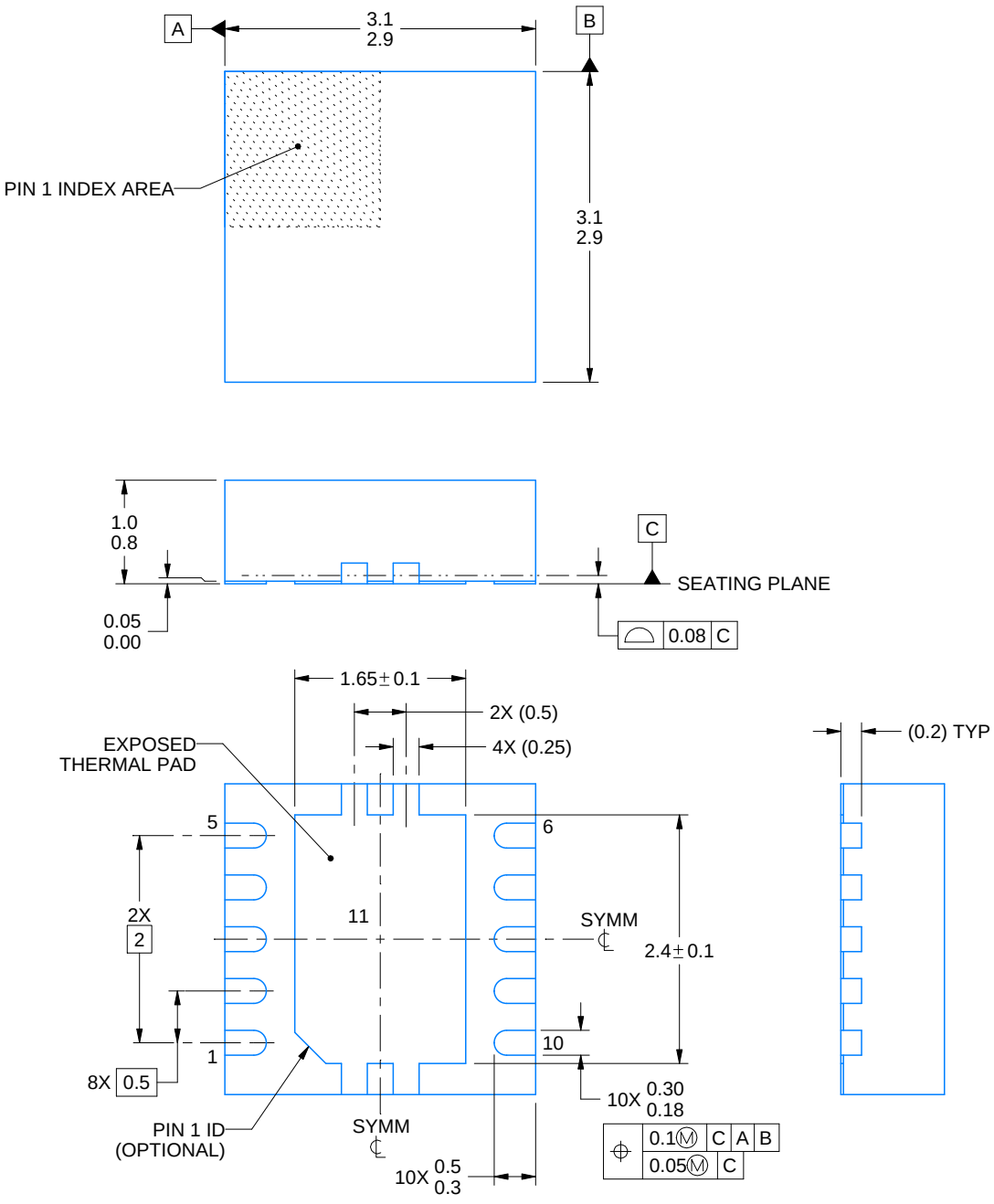

NOTES:

1. All linear dimensions are in millimeters. Any dimensions in parenthesis are for reference only. Dimensioning and tolerancing per ASME Y14.5M.
2. This drawing is subject to change without notice.
3. The package thermal pad must be soldered to the printed circuit board for optimal thermal and mechanical performance.

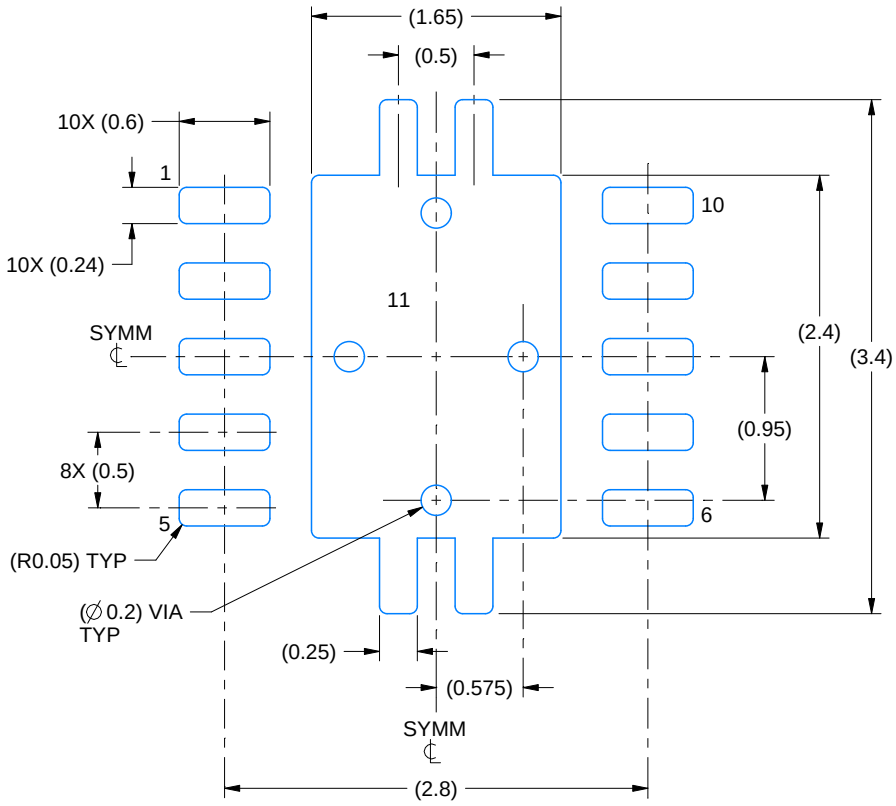

LAND PATTERN EXAMPLE
EXPOSED METAL SHOWN
SCALE:20X

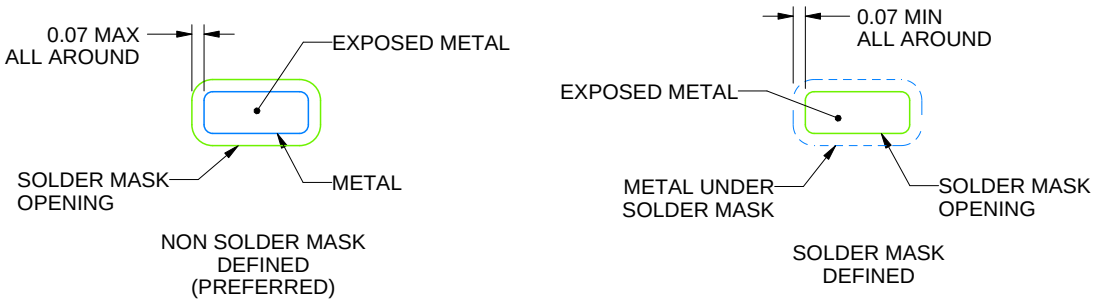

SOLDER MASK DETAILS

4218878/B 07/2018

NOTES: (continued)

4. This package is designed to be soldered to a thermal pad on the board. For more information, see Texas Instruments literature number SLUA271 (www.ti.com/lit/slua271).
5. Vias are optional depending on application, refer to device data sheet. If any vias are implemented, refer to their locations shown on this view. It is recommended that vias under paste be filled, plugged or tented.

EXAMPLE STENCIL DESIGN

DRC0010J

VSON - 1 mm max height

PLASTIC SMALL OUTLINE - NO LEAD

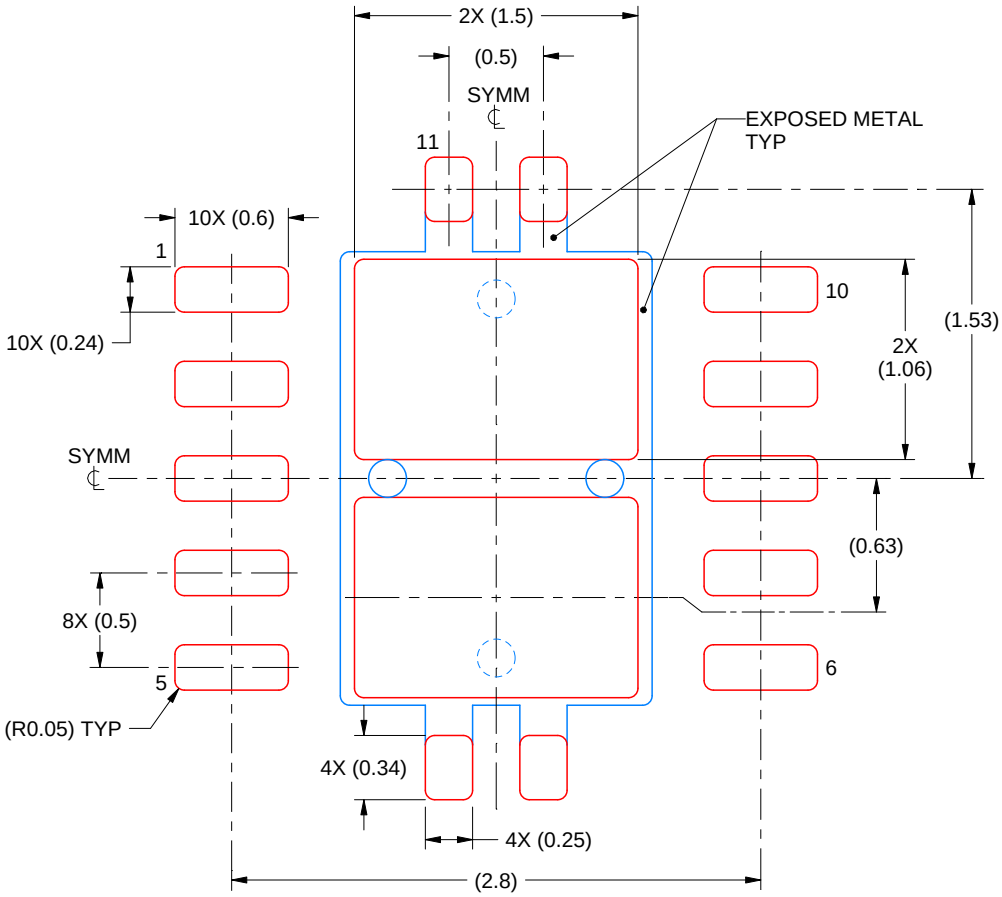

SOLDER PASTE EXAMPLE
BASED ON 0.125 mm THICK STENCIL

EXPOSED PAD 11:
80% PRINTED SOLDER COVERAGE BY AREA
SCALE:25X

4218878/B 07/2018

NOTES: (continued)

6. Laser cutting apertures with trapezoidal walls and rounded corners may offer better paste release. IPC-7525 may have alternate design recommendations.

IMPORTANT NOTICE AND DISCLAIMER

TI PROVIDES TECHNICAL AND RELIABILITY DATA (INCLUDING DATASHEETS), DESIGN RESOURCES (INCLUDING REFERENCE DESIGNS), APPLICATION OR OTHER DESIGN ADVICE, WEB TOOLS, SAFETY INFORMATION, AND OTHER RESOURCES “AS IS” AND WITH ALL FAULTS, AND DISCLAIMS ALL WARRANTIES, EXPRESS AND IMPLIED, INCLUDING WITHOUT LIMITATION ANY IMPLIED WARRANTIES OF MERCHANTABILITY, FITNESS FOR A PARTICULAR PURPOSE OR NON-INFRINGEMENT OF THIRD PARTY INTELLECTUAL PROPERTY RIGHTS.

These resources are intended for skilled developers designing with TI products. You are solely responsible for (1) selecting the appropriate TI products for your application, (2) designing, validating and testing your application, and (3) ensuring your application meets applicable standards, and any other safety, security, or other requirements. These resources are subject to change without notice. TI grants you permission to use these resources only for development of an application that uses the TI products described in the resource. Other reproduction and display of these resources is prohibited. No license is granted to any other TI intellectual property right or to any third party intellectual property right. TI disclaims responsibility for, and you will fully indemnify TI and its representatives against, any claims, damages, costs, losses, and liabilities arising out of your use of these resources.

TI’s products are provided subject to TI’s Terms of Sale (www.ti.com/legal/termsofsale.html) or other applicable terms available either on ti.com or provided in conjunction with such TI products. TI’s provision of these resources does not expand or otherwise alter TI’s applicable warranties or warranty disclaimers for TI products.

Mailing Address: Texas Instruments, Post Office Box 655303, Dallas, Texas 75265
Copyright © 2020, Texas Instruments Incorporated