TPS3820-xx, TPS3823-xx, TPS3824-xx, TPS3825-xx, TPS3828-xx

SLVS165G − APRIL 1998 − REVISED JANUARY 2008

PROCESSOR SUPERVISORY CIRCUITS

FEATURES

- **Power-On Reset Generator With Fixed Delay Time of 200 ms (TPS3823/4/5/8) or 25 ms (TPS3820)**
- **Manual Reset Input (TPS3820/3/5/8)**
- **Reset Output Available in Active-Low (TPS3820/3/4/5), Active-High (TPS3824/5) and Open-Drain (TPS3828)**
- **Supply Voltage Supervision Range: 2.5 V, 3 V, 3.3 V, 5 V**
- **Watchdog Timer (TPS3820/3/4/8)**
- **Supply Current of 15 μA (Typ)**
- **SOT23-5 Package**
- **Temperature Range: −40°C to +85°C**

APPLICATIONS

- **Applications Using DSPs, Microcontrollers, or Microprocessors**
- **Industrial Equipment**
- **Programmable Controls**
- **Automotive Systems**
- **Portable/Battery-Powered Equipment**
- **Intelligent Instruments**
- **Wireless Communications Systems**
- **Notebook/Desktop Computers**

DESCRIPTION

The TPS382x family of supervisors provide circuit initialization and timing supervision, primarily for DSP and processor-based systems. During power-on, $\overline{\text{RESET}}$ asserts when the supply voltage V_{DD} becomes higher than 1.1 V. Thereafter, the supply voltage supervisor monitors V_{DD} and keeps $\overline{\text{RESET}}$ active as long as V_{DD} remains below the threshold voltage, V_{IT-}. An internal timer delays the return of the output to the inactive state (high) to ensure proper system reset. The delay time, t_d, starts after V_{DD} has risen above the threshold voltage, V_{IT-}. When the supply voltage drops below the threshold voltage V_{IT-}, the output becomes active (low) again. No external components are required. All the devices of this family have a fixed-sense threshold voltage, V_{IT-}, set by an internal voltage divider.

TPS3820, TPS3823, TPS3828: DBV PACKAGE
(TOP VIEW)

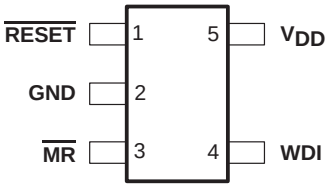

TPS3824: DBV PACKAGE
(TOP VIEW)

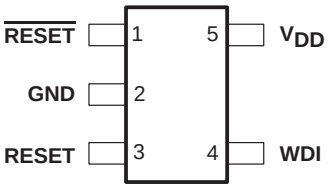

TPS3825: DBV PACKAGE
(TOP VIEW)

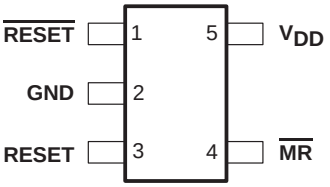

TYPICAL APPLICATION

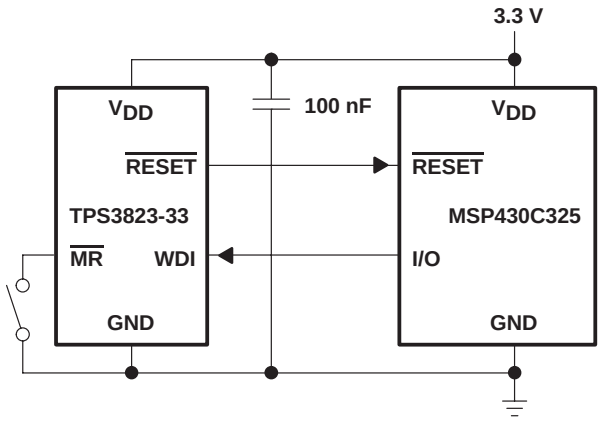

Please be aware that an important notice concerning availability, standard warranty, and use in critical applications of Texas Instruments semiconductor products and disclaimers thereto appears at the end of this data sheet.

All trademarks are the property of their respective owners.

PRODUCTION DATA information is current as of publication date. Products conform to specifications per the terms of Texas Instruments standard warranty. Production processing does not necessarily include testing of all parameters.

Copyright © 2001−2007, Texas Instruments Incorporated

DESCRIPTION (Continued)

The TPS3820/3/5/8 devices incorporate a manual reset input, $\overline{MR}$. A low level at $\overline{MR}$ causes $\overline{RESET}$ to become active. The TPS3824/5 devices include a high-level output RESET. TPS3820/3/4/8 have a watchdog timer that is periodically triggered by a positive or negative transition at WDI. When the supervising system fails to retrigger the watchdog circuit within the time-out interval, t_{tout}, $\overline{RESET}$ becomes active for the time period t_d. This event also reinitializes the watchdog timer. Leaving WDI unconnected disables the watchdog. In applications where the input to the WDI pin may be active (transitioning high and low) when the TPS3820/3/4/8 is asserting $\overline{RESET}$, the TPS3820/3/4/8 does not return to a non-reset state when the input voltage is above V_T. If the application requires that input to WDI is active when $\overline{RESET}$ is asserted, WDI must be decoupled from the active signal. This decoupling can be accomplished by using an N-channel FET in series with the WDI pin, with the gate of the FET connected to the $\overline{RESET}$ output as shown in Figure 1.

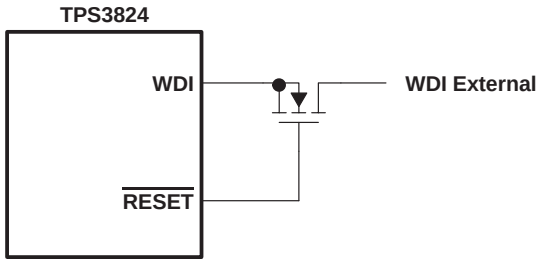

Figure 1

The product spectrum is designed for supply voltages of 2.5 V, 3 V, 3.3 V, and 5 V. The circuits are available in an SOT23-5 package. The TPS382x devices are characterized for operation over a temperature range of −40°C to +85°C.

PACKAGE INFORMATION(1)

DEVICE NAME	DEVICE NAME	THRESHOLD VOLTAGE(2)	MARKING
TPS3820-33DBVT(3)	TPS3820-33DBVR(4)	2.93 V	PDEI
TPS3820-50DBVT(3)	TPS3820-50DBVR(4)	4.55 V	PDDI
TPS3823-25DBVT(3)	TPS3823-25DBVR(4)	2.25 V	PAPI
TPS3823-30DBVT(3)	TPS3823-30DBVR(4)	2.63 V	PAQI
TPS3823-33DBVT(3)	TPS3823-33DBVR(4)	2.93 V	PARI
TPS3823-50DBVT(3)	TPS3823-50DBVR(4)	4.55 V	PASI
TPS3824-25DBVT(3)	TPS3824-25DBVR(4)	2.25 V	PATI
TPS3824-30DBVT(3)	TPS3824-30DBVR(4)	2.63 V	PAUI
TPS3824-33DBVT(3)	TPS3824-33DBVR(4)	2.93 V	PAVI
TPS3824-50DBVT(3)	TPS3824-50DBVR(4)	4.55 V	PAWI
TPS3825-33DBVT(3)	TPS3825-33DBVR(4)	2.93 V	PDGI
TPS3825-50DBVT(3)	TPS3825-50DBVR(4)	4.55 V	PDFI
TPS3828-33DBVT(3)	TPS3828-33DBVR(4)	2.93 V	PDII
TPS3828-50DBVT(3)	TPS3828-50DBVR(4)	4.55 V	PDHI

(1) For the most current package and ordering information see the Package Option Addendum at the end of this document, or see the TI web site at www.ti.com.
(2) For other threshold voltage versions, please contact the local TI sales office.
(3) The DBVT package indicates tape and reel of 250 parts.
(4) The DBVR package indicates tape and reel of 3000 parts.

FUNCTION/TRUTH TABLE

INPUTS		OUTPUTS	
$\overline{MR}$(1)	VDD > VIT	$\overline{RESET}$	RESET(2)
L	0	L	H
L	1	L	H
H	0	L	H
H	1	H	L

(1) TPS3820/3/5/8
(2) TPS3824/5

FUNCTIONAL BLOCK DIAGRAM

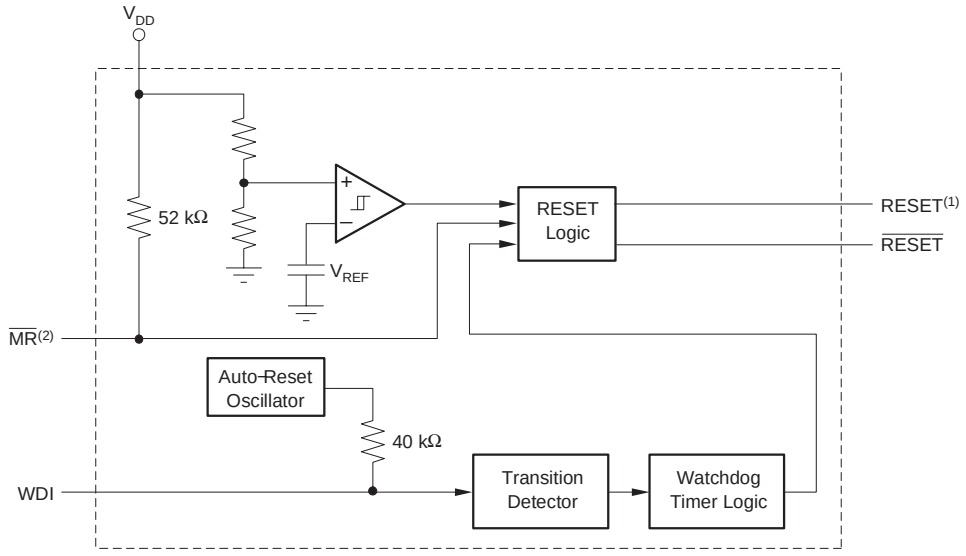

NOTES: (1) TPS3824/5
(2) TPS3820/3/5/8

TIMING DIAGRAM

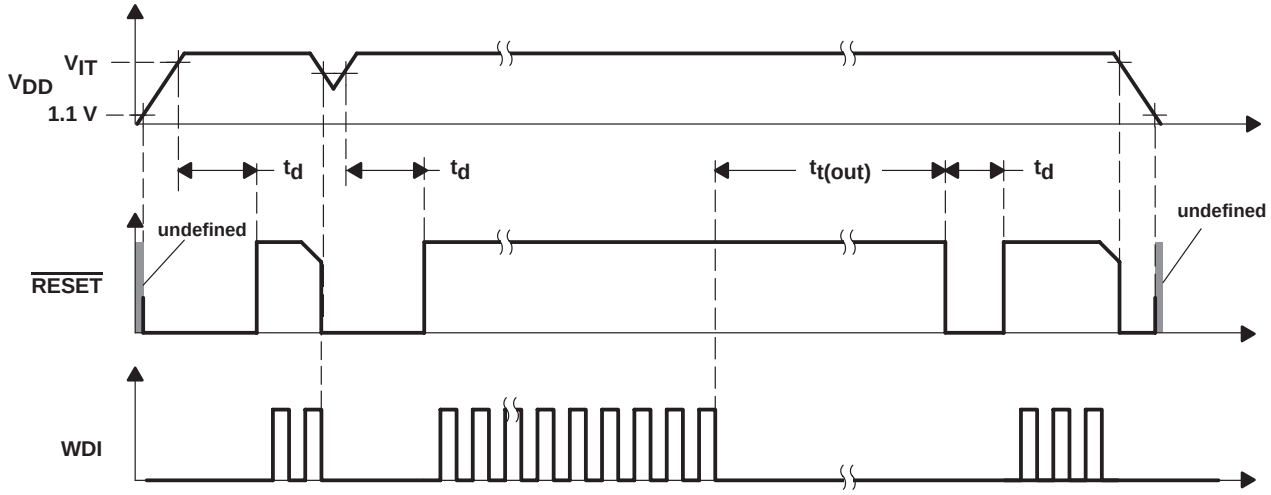



This integrated circuit can be damaged by ESD. Texas Instruments recommends that all integrated circuits be handled with appropriate precautions. Failure to observe proper handling and installation procedures can cause damage.

ESD damage can range from subtle performance degradation to complete device failure. Precision integrated circuits may be more susceptible to damage because very small parametric changes could cause the device not to meet its published specifications.

ABSOLUTE MAXIMUM RATINGS(1)

Over operating free-air temperature range, unless otherwise noted.

Supply voltage, V_{DD}(1) . . . . . +6 V
RESET, $\overline{\text{RESET}}$, $\overline{\text{MR}}$, WDI(1) . . . . . −0.3 V to (V_{DD} + 0.3 V)
Maximum low output current, I_{OL} . . . . . +5 mA
Maximum high output current, I_{OH} . . . . . −5 mA
Input clamp current range, I_{IK} (V_I < 0 or V_I > V_{DD}) . . . . . ±10 mA
Output clamp current range, I_{OK} (V_O < 0 or V_O > V_{DD}) . . . . . ±10 mA
Continuous total power dissipation . . . . . See Dissipation Rating Table
Operating free-air temperature range, T_A . . . . . −40°C to +85°C
Storage temperature range, T_{stg} . . . . . −65°C to +150°C
Soldering temperature . . . . . +260°C

(1) Stresses beyond those listed under *absolute maximum ratings* may cause permanent damage to the device. These are stress ratings only, and functional operation of the device at these or any other conditions beyond those indicated under *recommended operating conditions* is not implied. Exposure to absolute-maximum-rated conditions for extended periods may affect device reliability.
(2) All voltage values are with respect to GND.

DISSIPATION RATING TABLE

PACKAGE	$T_A \le$ +25°C POWER RATING	OPERATING FACTOR ABOVE T_A = +25°C	T_A = +70°C POWER RATING	T_A = +85°C POWER RATING
DBV	437 mW	3.5 mW/°C	280 mW	227 mW

RECOMMENDED OPERATING CONDITIONS

	MIN	MAX	UNIT
Supply voltage, V_{DD}	1.1	5.5	V
Input voltage, V_I	0	V_{DD} + 0.3	V
High-level input voltage at $\overline{\text{MR}}$ and WDI, V_{IH}	0.7 × V_{DD}		V
Low-level input voltage, V_{IL}		0.3 × V_{DD}	V
Input transition rise and fall rate at $\overline{\text{MR}}$ or WDI, $\Delta t/\Delta V$		100	ns/V
Operating free-air temperature range, T_A	−40	+85	°C

ELECTRICAL CHARACTERISTICS

Over operating free-air temperature range, unless otherwise noted.

PARAMETER				TEST CONDITIONS	MIN	TYP	MAX	UNIT
V_{OH}	High-level output voltage	$\overline{\text{RESET}}$	TPS382x-25	$V_{DD} = V_{IT-} + 0.2$ V, $I_{OH} = -20$ µA	$0.8 \times V_{DD}$			V
			TPS382x-30 TPS382x-33	$V_{DD} = V_{IT-} + 0.2$ V, $I_{OH} = -30$ µA				
			TPS382x-50	$V_{DD} = V_{IT-} + 0.2$ V, $I_{OH} = -120$ µA	$V_{DD} - 1.5$ V			
		RESET	TPS3824-25 TPS3825-25	$V_{DD} \geq 1.8$ V, $I_{OH} = -100$ µA	$0.8 \times V_{DD}$			V
			TPS3824-30 TPS3825-30	$V_{DD} \geq 1.8$ V, $I_{OH} = -150$ µA				
			TPS3824-33 TPS3825-33					
			TPS3824-50 TPS3825-50					
V_{OL}	Low-level output voltage	RESET	TPS3824-25 TPS3825-25	$V_{DD} = V_{IT-} + 0.2$ V, $I_{OL} = 1$ mA			0.4	V
			TPS3824-30 TPS3825-30	$V_{DD} = V_{IT-} + 0.2$ V, $I_{OL} = 1.2$ mA				
			TPS3824-33 TPS3825-33					
			TPS3824-50 TPS3825-50	$V_{DD} = V_{IT-} + 0.2$ V, $I_{OL} = 3$ mA				
		$\overline{\text{RESET}}$	TPS382x-25	$V_{DD} = V_{IT-} - 0.2$ V, $I_{OL} = 1$ mA			0.4	V
			TPS382x-30 TPS382x-33	$V_{DD} = V_{IT-} - 0.2$ V, $I_{OL} = 1.2$ mA				
			TPS382x-50	$V_{DD} = V_{IT-} - 0.2$ V, $I_{OL} = 3$ mA				
	Power-up reset voltage(1)			$V_{DD} \geq 1.1$ V, $I_{OL} = 20$ µA			0.4	V
V_{IT-}	Negative-going input threshold voltage(2)		TPS382x-25	$T_A = 0°C$ to $+85°C$	2.21	2.25	2.30	V
			TPS382x-30		2.59	2.63	2.69	
			TPS382x-33		2.88	2.93	3	
			TPS382x-50		4.49	4.55	4.64	
			TPS382x-25	$T_A = -40°C$ to $+85°C$	2.20	2.25	2.30	V
			TPS382x-30		2.57	2.63	2.69	
			TPS382x-33		2.86	2.93	3	
			TPS382x-50		4.46	4.55	4.64	
V_{hys}	Hysteresis at V_{DD} input		TPS382x-25 TPS382x-30 TPS382x-33			30		mV
			TPS382x-50			50		

(1) The lowest supply voltage at which $\overline{\text{RESET}}$ becomes active. $t_{r,\ VDD} \geq 15$ µs/V.
(2) To ensure best stability of the threshold voltage, a bypass capacitor (ceramic, 0.1 µF) should be placed near the supply terminals.

ELECTRICAL CHARACTERISTICS (continued)

Over operating free-air temperature range, unless otherwise noted.

PARAMETER				TEST CONDITIONS	MIN	TYP	MAX	UNIT
$I_{IH(AV)}$	Average high-level input current		WDI	WDI = V_{DD}, time average (dc = 88%)		120		µA
$I_{IL(AV)}$	Average low-level input current		WDI	WDI = 0.3 V, V_{DD} = 5.5 V time average (dc = 12%)		−15		µA
I_{IH}	High-level input current		WDI	WDI = V_{DD}		140	190	µA
			$\overline{MR}$	$\overline{MR}$ = V_{DD} × 0.7, V_{DD} = 5.5 V		−40	−60	µA
I_{IL}	Low-level input current		WDI	WDI = 0.3 V, V_{DD} = 5.5 V		140	190	µA
			$\overline{MR}$	$\overline{MR}$ = 0.3 V, V_{DD} = 5.5 V		−110	−160	µA
I_{OS}	Output short-circuit current(1)	$\overline{RESET}$	TPS382x-25	V_{DD} = $V_{IT, max}$ + 0.2 V, V_O = 0 V			−400	µA
			TPS382x-30				−400	µA
			TPS382x-33				−400	µA
			TPS382x-50				−800	µA
I_{DD}	Supply current			WDI and $\overline{MR}$ unconnected, Outputs unconnected		15	25	µA
	Internal pullup resistor at $\overline{MR}$					52		kΩ
C_i	Input capacitance at $\overline{MR}$, WDI			V_I = 0 V to 5.5 V		5		pF

(1) The $\overline{RESET}$ short-circuit current is the maximum pullup current when $\overline{RESET}$ is driven low by a µP bidirectional reset pin.

TIMING REQUIREMENTS AT R_L = 1 MΩ, C_L = 50 PF, T_A = 25°C

At R_L = 1 MΩ, C_L = 50 pF, T_A = +25°C.

PARAMETER			TEST CONDITIONS	MIN	MAX	UNIT
t_w	Pulse width	at V_{DD}	V_{DD} = $V_{IT−}$ + 0.2 V, V_{DD} = V_{IT-} − 0.2 V	6		µs
		at $\overline{MR}$	V_{DD} ≥ $V_{IT−}$ + 0.2 V, V_{IL} = 0.3 x V_{DD}, V_{IH} = 0.7 x V_{DD}	1		µs
		at WDI	V_{DD} ≥ $V_{IT−}$ + 0.2 V, V_{IL} = 0.3 x V_{DD}, V_{IH} = 0.7 x V_{DD}	100		ns

SWITCHING CHARACTERISTICS

At R_L = 1 MΩ, C_L = 50 pF, T_A = +25°C.

PARAMETER			TEST CONDITIONS	MIN	TYP	MAX	UNIT
t_{tout}	Watchdog time out	TPS3820	V_{DD} ≥ $V_{IT−}$ + 0.2 V, See timing diagram	112	200	310	ms
		TPS3823/4/8		0.9	1.6	2.5	s
t_d	Delay time	TPS3820	V_{DD} ≥ $V_{IT−}$ +0.2 V, See timing diagram	15	25	37	ms
		TPS3823/4/5/8		120	200	300	ms
t_{PHL}	Propagation (delay) time, high-to-low-level output	$\overline{MR}$ to $\overline{RESET}$ delay (TPS3820/3/5/8)	V_{DD} ≥ $V_{IT−}$ +0.2 V, V_{IL} = 0.3 x V_{DD}, V_{IH} = 0.7 x V_{DD}			0.1	µs
		V_{DD} to $\overline{RESET}$ delay	V_{IL} = V_{IT-} - 0.2 V, V_{IH} = V_{IT-} + 0.2 V			25	µs
t_{PLH}	Propagation (delay) time, low-to-high-level output	$\overline{MR}$ to RESET delay (TPS3824/5)	V_{DD} ≥ $V_{IT−}$ +0.2 V, V_{IL} = 0.3 x V_{DD}, V_{IH} = 0.7 x V_{DD}			0.1	µs
		V_{DD} to RESET delay (TPS3824/5)	V_{IL} = V_{IT-} - 0.2 V, V_{IH} = V_{IT-} + 0.2 V			25	µs

TYPICAL CHARACTERISTICS

NORMALIZED INPUT THRESHOLD VOLTAGE vs FREE-AIR TEMPERATURE AT V_{DD}

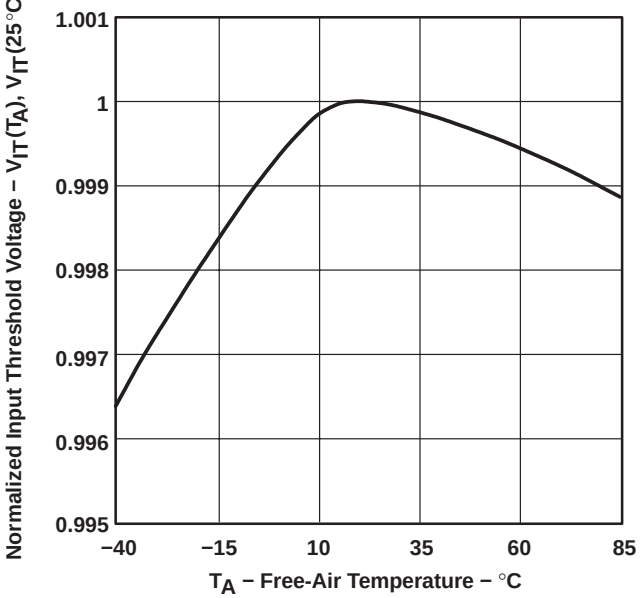

Figure 2

SUPPLY CURRENT vs SUPPLY VOLTAGE

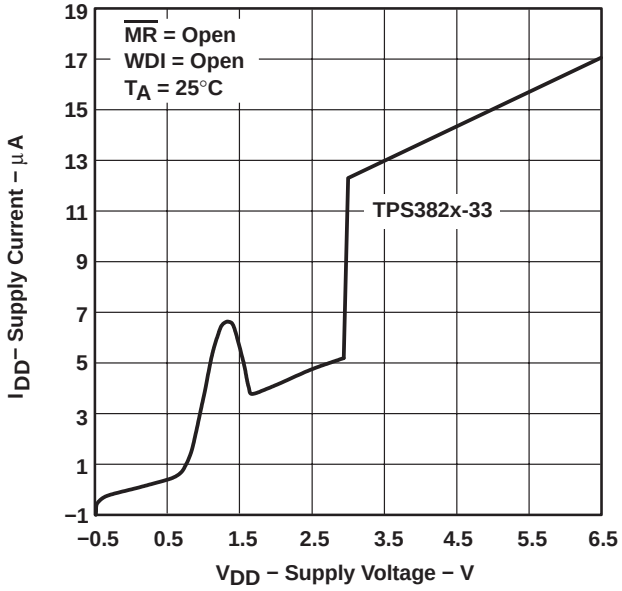

Figure 3

INPUT CURRENT vs INPUT VOLTAGE AT $\overline{MR}$

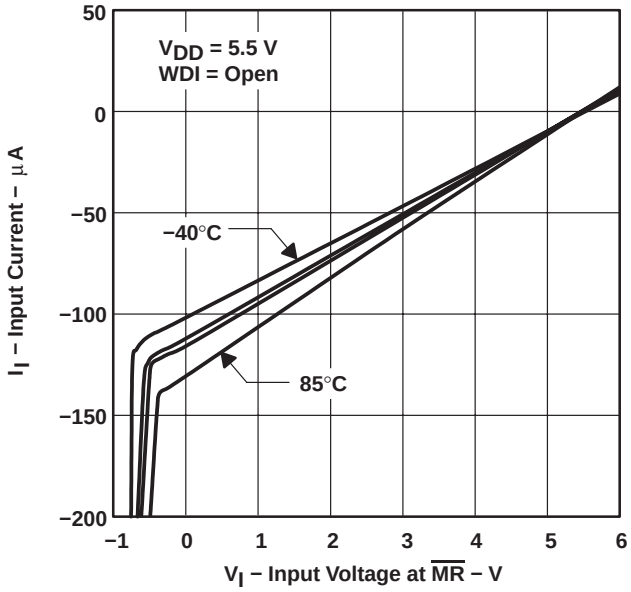

Figure 4

LOW-LEVEL OUTPUT VOLTAGE vs LOW-LEVEL OUTPUT CURRENT

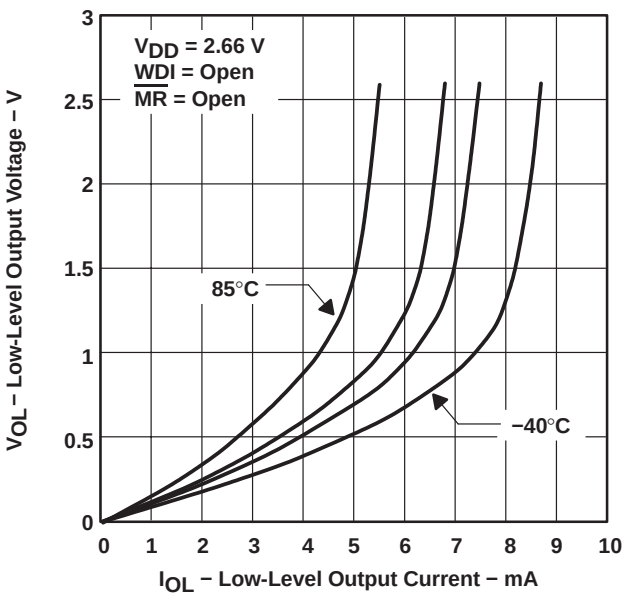

Figure 5

TYPICAL CHARACTERISTICS

HIGH-LEVEL OUTPUT VOLTAGE
vs
HIGH-LEVEL OUTPUT CURRENT

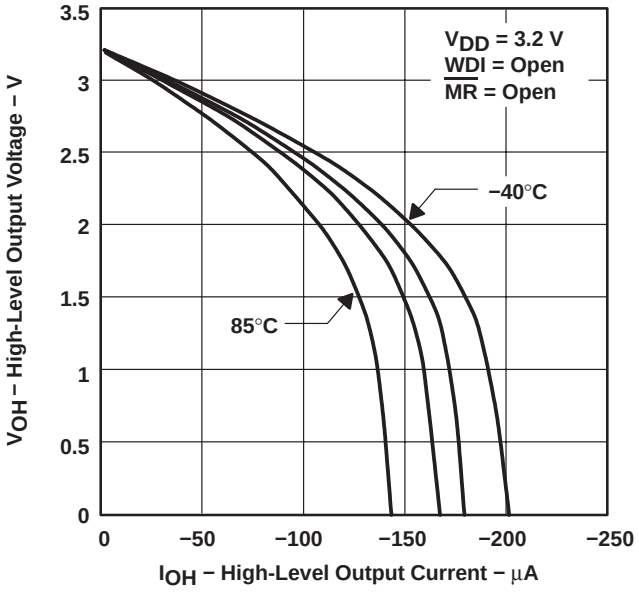

Figure 6

HIGH-LEVEL OUTPUT VOLTAGE
vs
HIGH-LEVEL OUTPUT CURRENT

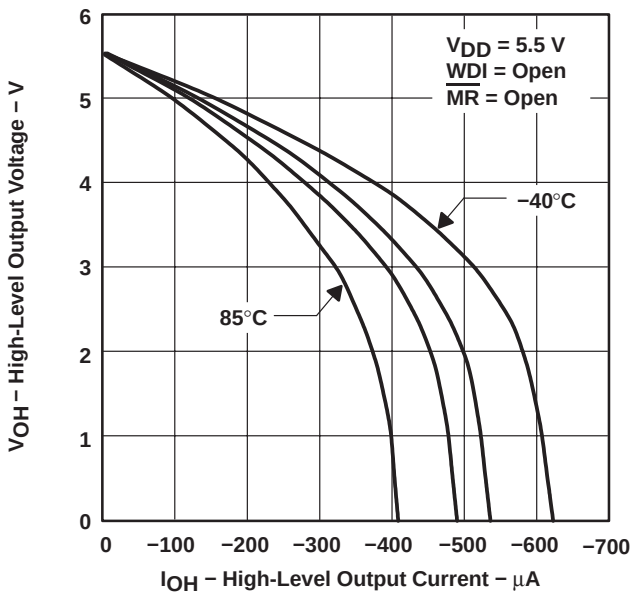

Figure 7

MINIMUM PULSE DURATION AT V_{DD}
vs
V_{DD} THRESHOLD OVERDRIVE

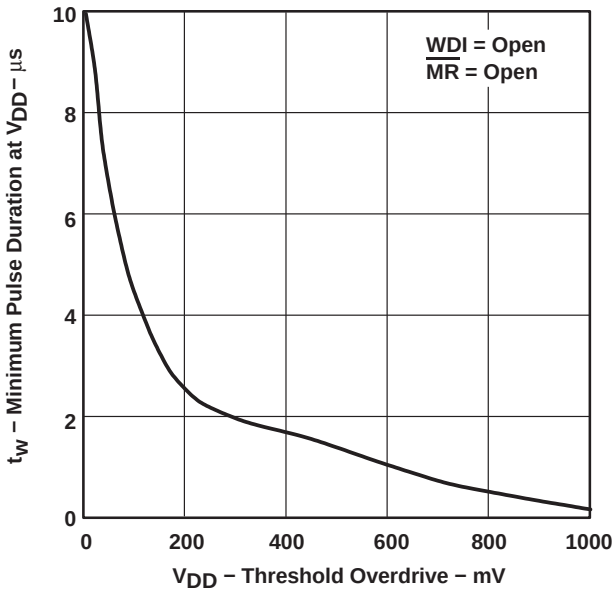

Figure 8

Revision History

DATE	REV	PAGE	SECTION	DESCRIPTION
1/08	G	2	Description	Deleted last paragraph.
		3	Functional Block Diagram	Replaced diagram.
6/07	F	Front Page	—	Updated front page.
		3	Function/Truth Table	Corrected Note (2) from PS3820/3/5/8 to TPS3824/5.

NOTE: Page numbers for previous revisions may differ from page numbers in the current version.

PACKAGING INFORMATION

Orderable Device	Status (1)	Package Type	Package Drawing	Pins	Package Qty	Eco Plan (2)	Lead/Ball Finish	MSL Peak Temp (3)
TPS3820-33DBVR	ACTIVE	SOT-23	DBV	5	3000	Green (RoHS & no Sb/Br)	CU NIPDAU	Level-1-260C-UNLIM
TPS3820-33DBVRG4	ACTIVE	SOT-23	DBV	5	3000	Green (RoHS & no Sb/Br)	CU NIPDAU	Level-1-260C-UNLIM
TPS3820-33DBVT	ACTIVE	SOT-23	DBV	5	250	Green (RoHS & no Sb/Br)	CU NIPDAU	Level-1-260C-UNLIM
TPS3820-33DBVTG4	ACTIVE	SOT-23	DBV	5	250	Green (RoHS & no Sb/Br)	CU NIPDAU	Level-1-260C-UNLIM
TPS3820-50DBVR	ACTIVE	SOT-23	DBV	5	3000	Green (RoHS & no Sb/Br)	CU NIPDAU	Level-1-260C-UNLIM
TPS3820-50DBVRG4	ACTIVE	SOT-23	DBV	5	3000	Green (RoHS & no Sb/Br)	CU NIPDAU	Level-1-260C-UNLIM
TPS3820-50DBVT	ACTIVE	SOT-23	DBV	5	250	Green (RoHS & no Sb/Br)	CU NIPDAU	Level-1-260C-UNLIM
TPS3820-50DBVTG4	ACTIVE	SOT-23	DBV	5	250	Green (RoHS & no Sb/Br)	CU NIPDAU	Level-1-260C-UNLIM
TPS3823-25DBVR	ACTIVE	SOT-23	DBV	5	3000	Green (RoHS & no Sb/Br)	CU NIPDAU	Level-1-260C-UNLIM
TPS3823-25DBVRG4	ACTIVE	SOT-23	DBV	5	3000	Green (RoHS & no Sb/Br)	CU NIPDAU	Level-1-260C-UNLIM
TPS3823-25DBVT	ACTIVE	SOT-23	DBV	5	250	Green (RoHS & no Sb/Br)	CU NIPDAU	Level-1-260C-UNLIM
TPS3823-25DBVTG4	ACTIVE	SOT-23	DBV	5	250	Green (RoHS & no Sb/Br)	CU NIPDAU	Level-1-260C-UNLIM
TPS3823-30DBVR	ACTIVE	SOT-23	DBV	5	3000	Green (RoHS & no Sb/Br)	CU NIPDAU	Level-1-260C-UNLIM
TPS3823-30DBVRG4	ACTIVE	SOT-23	DBV	5	3000	Green (RoHS & no Sb/Br)	CU NIPDAU	Level-1-260C-UNLIM
TPS3823-30DBVT	ACTIVE	SOT-23	DBV	5	250	Green (RoHS & no Sb/Br)	CU NIPDAU	Level-1-260C-UNLIM
TPS3823-30DBVTG4	ACTIVE	SOT-23	DBV	5	250	Green (RoHS & no Sb/Br)	CU NIPDAU	Level-1-260C-UNLIM
TPS3823-33DBVR	ACTIVE	SOT-23	DBV	5	3000	Green (RoHS & no Sb/Br)	CU NIPDAU	Level-1-260C-UNLIM
TPS3823-33DBVRG4	ACTIVE	SOT-23	DBV	5	3000	Green (RoHS & no Sb/Br)	CU NIPDAU	Level-1-260C-UNLIM
TPS3823-33DBVT	ACTIVE	SOT-23	DBV	5	250	Green (RoHS & no Sb/Br)	CU NIPDAU	Level-1-260C-UNLIM
TPS3823-33DBVTG4	ACTIVE	SOT-23	DBV	5	250	Green (RoHS & no Sb/Br)	CU NIPDAU	Level-1-260C-UNLIM
TPS3823-50DBVR	ACTIVE	SOT-23	DBV	5	3000	Green (RoHS & no Sb/Br)	CU NIPDAU	Level-1-260C-UNLIM
TPS3823-50DBVRG4	ACTIVE	SOT-23	DBV	5	3000	Green (RoHS & no Sb/Br)	CU NIPDAU	Level-1-260C-UNLIM
TPS3823-50DBVT	ACTIVE	SOT-23	DBV	5	250	Green (RoHS & no Sb/Br)	CU NIPDAU	Level-1-260C-UNLIM
TPS3823-50DBVTG4	ACTIVE	SOT-23	DBV	5	250	Green (RoHS & no Sb/Br)	CU NIPDAU	Level-1-260C-UNLIM
TPS3824-25DBVR	ACTIVE	SOT-23	DBV	5	3000	Green (RoHS & no Sb/Br)	CU NIPDAU	Level-1-260C-UNLIM

Orderable Device	Status (1)	Package Type	Package Drawing	Pins	Package Qty	Eco Plan (2)	Lead/Ball Finish	MSL Peak Temp (3)
TPS3824-25DBVRG4	ACTIVE	SOT-23	DBV	5	3000	Green (RoHS & no Sb/Br)	CU NIPDAU	Level-1-260C-UNLIM
TPS3824-25DBVT	ACTIVE	SOT-23	DBV	5	250	Green (RoHS & no Sb/Br)	CU NIPDAU	Level-1-260C-UNLIM
TPS3824-25DBVTG4	ACTIVE	SOT-23	DBV	5	250	Green (RoHS & no Sb/Br)	CU NIPDAU	Level-1-260C-UNLIM
TPS3824-30DBVR	ACTIVE	SOT-23	DBV	5	3000	Green (RoHS & no Sb/Br)	CU NIPDAU	Level-1-260C-UNLIM
TPS3824-30DBVRG4	ACTIVE	SOT-23	DBV	5	3000	Green (RoHS & no Sb/Br)	CU NIPDAU	Level-1-260C-UNLIM
TPS3824-30DBVT	ACTIVE	SOT-23	DBV	5	250	Green (RoHS & no Sb/Br)	CU NIPDAU	Level-1-260C-UNLIM
TPS3824-30DBVTG4	ACTIVE	SOT-23	DBV	5	250	Green (RoHS & no Sb/Br)	CU NIPDAU	Level-1-260C-UNLIM
TPS3824-33DBVR	ACTIVE	SOT-23	DBV	5	3000	Green (RoHS & no Sb/Br)	CU NIPDAU	Level-1-260C-UNLIM
TPS3824-33DBVRG4	ACTIVE	SOT-23	DBV	5	3000	Green (RoHS & no Sb/Br)	CU NIPDAU	Level-1-260C-UNLIM
TPS3824-33DBVT	ACTIVE	SOT-23	DBV	5	250	Green (RoHS & no Sb/Br)	CU NIPDAU	Level-1-260C-UNLIM
TPS3824-33DBVTG4	ACTIVE	SOT-23	DBV	5	250	Green (RoHS & no Sb/Br)	CU NIPDAU	Level-1-260C-UNLIM
TPS3824-50DBVR	ACTIVE	SOT-23	DBV	5	3000	Green (RoHS & no Sb/Br)	CU NIPDAU	Level-1-260C-UNLIM
TPS3824-50DBVRG4	ACTIVE	SOT-23	DBV	5	3000	Green (RoHS & no Sb/Br)	CU NIPDAU	Level-1-260C-UNLIM
TPS3824-50DBVT	ACTIVE	SOT-23	DBV	5	250	Green (RoHS & no Sb/Br)	CU NIPDAU	Level-1-260C-UNLIM
TPS3824-50DBVTG4	ACTIVE	SOT-23	DBV	5	250	Green (RoHS & no Sb/Br)	CU NIPDAU	Level-1-260C-UNLIM
TPS3825-33DBVR	ACTIVE	SOT-23	DBV	5	3000	Green (RoHS & no Sb/Br)	CU NIPDAU	Level-1-260C-UNLIM
TPS3825-33DBVRG4	ACTIVE	SOT-23	DBV	5	3000	Green (RoHS & no Sb/Br)	CU NIPDAU	Level-1-260C-UNLIM
TPS3825-33DBVT	ACTIVE	SOT-23	DBV	5	250	Green (RoHS & no Sb/Br)	CU NIPDAU	Level-1-260C-UNLIM
TPS3825-33DBVTG4	ACTIVE	SOT-23	DBV	5	250	Green (RoHS & no Sb/Br)	CU NIPDAU	Level-1-260C-UNLIM
TPS3825-50DBVR	ACTIVE	SOT-23	DBV	5	3000	Green (RoHS & no Sb/Br)	CU NIPDAU	Level-1-260C-UNLIM
TPS3825-50DBVRG4	ACTIVE	SOT-23	DBV	5	3000	Green (RoHS & no Sb/Br)	CU NIPDAU	Level-1-260C-UNLIM
TPS3825-50DBVT	ACTIVE	SOT-23	DBV	5	250	Green (RoHS & no Sb/Br)	CU NIPDAU	Level-1-260C-UNLIM
TPS3825-50DBVTG4	ACTIVE	SOT-23	DBV	5	250	Green (RoHS & no Sb/Br)	CU NIPDAU	Level-1-260C-UNLIM
TPS3828-33DBVR	ACTIVE	SOT-23	DBV	5	3000	Green (RoHS & no Sb/Br)	CU NIPDAU	Level-1-260C-UNLIM
TPS3828-33DBVRG4	ACTIVE	SOT-23	DBV	5	3000	Green (RoHS & no Sb/Br)	CU NIPDAU	Level-1-260C-UNLIM
TPS3828-33DBVT	ACTIVE	SOT-23	DBV	5	250	Green (RoHS & no Sb/Br)	CU NIPDAU	Level-1-260C-UNLIM

Orderable Device	Status [1]	Package Type	Package Drawing	Pins	Package Qty	Eco Plan [2]	Lead/Ball Finish	MSL Peak Temp [3]
TPS3828-33DBVTG4	ACTIVE	SOT-23	DBV	5	250	Green (RoHS & no Sb/Br)	CU NIPDAU	Level-1-260C-UNLIM
TPS3828-50DBVR	ACTIVE	SOT-23	DBV	5	3000	Green (RoHS & no Sb/Br)	CU NIPDAU	Level-1-260C-UNLIM
TPS3828-50DBVRG4	ACTIVE	SOT-23	DBV	5	3000	Green (RoHS & no Sb/Br)	CU NIPDAU	Level-1-260C-UNLIM
TPS3828-50DBVT	ACTIVE	SOT-23	DBV	5	250	Green (RoHS & no Sb/Br)	CU NIPDAU	Level-1-260C-UNLIM
TPS3828-50DBVTG4	ACTIVE	SOT-23	DBV	5	250	Green (RoHS & no Sb/Br)	CU NIPDAU	Level-1-260C-UNLIM
TPS3828-50QDBVRG4Q	ACTIVE	SOT-23	DBV	5	3000	TBD	CU NIPDAU	Level-1-220C-UNLIM

(1) The marketing status values are defined as follows:
ACTIVE: Product device recommended for new designs.
LIFEBUY: TI has announced that the device will be discontinued, and a lifetime-buy period is in effect.
NRND: Not recommended for new designs. Device is in production to support existing customers, but TI does not recommend using this part in a new design.
PREVIEW: Device has been announced but is not in production. Samples may or may not be available.
OBSOLETE: TI has discontinued the production of the device.

(2) Eco Plan - The planned eco-friendly classification: Pb-Free (RoHS), Pb-Free (RoHS Exempt), or Green (RoHS & no Sb/Br) - please check http://www.ti.com/productcontent for the latest availability information and additional product content details.
TBD: The Pb-Free/Green conversion plan has not been defined.
Pb-Free (RoHS): TI's terms "Lead-Free" or "Pb-Free" mean semiconductor products that are compatible with the current RoHS requirements for all 6 substances, including the requirement that lead not exceed 0.1% by weight in homogeneous materials. Where designed to be soldered at high temperatures, TI Pb-Free products are suitable for use in specified lead-free processes.
Pb-Free (RoHS Exempt): This component has a RoHS exemption for either 1) lead-based flip-chip solder bumps used between the die and package, or 2) lead-based die adhesive used between the die and leadframe. The component is otherwise considered Pb-Free (RoHS compatible) as defined above.
Green (RoHS & no Sb/Br): TI defines "Green" to mean Pb-Free (RoHS compatible), and free of Bromine (Br) and Antimony (Sb) based flame retardants (Br or Sb do not exceed 0.1% by weight in homogeneous material)

(3) MSL, Peak Temp. -- The Moisture Sensitivity Level rating according to the JEDEC industry standard classifications, and peak solder temperature.

Important Information and Disclaimer: The information provided on this page represents TI's knowledge and belief as of the date that it is provided. TI bases its knowledge and belief on information provided by third parties, and makes no representation or warranty as to the accuracy of such information. Efforts are underway to better integrate information from third parties. TI has taken and continues to take reasonable steps to provide representative and accurate information but may not have conducted destructive testing or chemical analysis on incoming materials and chemicals. TI and TI suppliers consider certain information to be proprietary, and thus CAS numbers and other limited information may not be available for release.

In no event shall TI's liability arising out of such information exceed the total purchase price of the TI part(s) at issue in this document sold by TI to Customer on an annual basis.

TAPE AND REEL INFORMATION

REEL DIMENSIONS

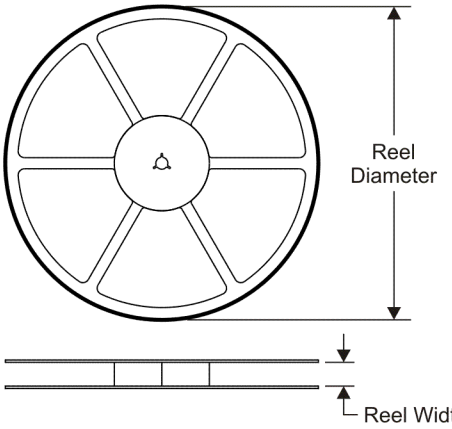

TAPE DIMENSIONS

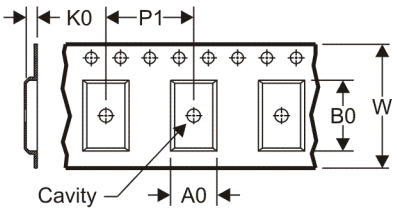

A0	Dimension designed to accommodate the component width
B0	Dimension designed to accommodate the component length
K0	Dimension designed to accommodate the component thickness
W	Overall width of the carrier tape
P1	Pitch between successive cavity centers

QUADRANT ASSIGNMENTS FOR PIN 1 ORIENTATION IN TAPE

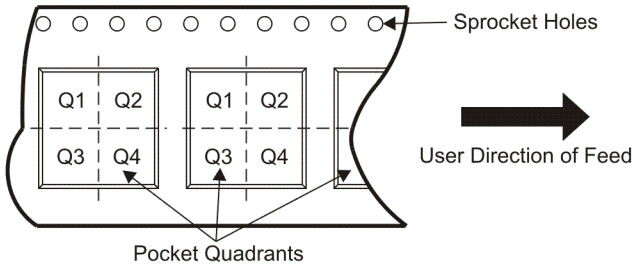

*All dimensions are nominal

Device	Package Type	Package Drawing	Pins	SPQ	Reel Diameter (mm)	Reel Width W1 (mm)	A0 (mm)	B0 (mm)	K0 (mm)	P1 (mm)	W (mm)	Pin1 Quadrant
TPS3820-33DBVR	SOT-23	DBV	5	3000	179.0	8.4	3.2	3.2	1.4	4.0	8.0	Q3
TPS3820-33DBVR	SOT-23	DBV	5	3000	180.0	9.0	3.15	3.2	1.4	4.0	8.0	Q3
TPS3820-33DBVT	SOT-23	DBV	5	250	179.0	8.4	3.2	3.2	1.4	4.0	8.0	Q3
TPS3820-50DBVR	SOT-23	DBV	5	3000	179.0	8.4	3.2	3.2	1.4	4.0	8.0	Q3
TPS3820-50DBVT	SOT-23	DBV	5	250	179.0	8.4	3.2	3.2	1.4	4.0	8.0	Q3
TPS3823-25DBVR	SOT-23	DBV	5	3000	179.0	8.4	3.2	3.2	1.4	4.0	8.0	Q3
TPS3823-25DBVT	SOT-23	DBV	5	250	179.0	8.4	3.2	3.2	1.4	4.0	8.0	Q3
TPS3823-30DBVR	SOT-23	DBV	5	3000	179.0	8.4	3.2	3.2	1.4	4.0	8.0	Q3
TPS3823-30DBVT	SOT-23	DBV	5	250	179.0	8.4	3.2	3.2	1.4	4.0	8.0	Q3
TPS3823-33DBVR	SOT-23	DBV	5	3000	179.0	8.4	3.2	3.2	1.4	4.0	8.0	Q3
TPS3823-33DBVT	SOT-23	DBV	5	250	179.0	8.4	3.2	3.2	1.4	4.0	8.0	Q3
TPS3823-50DBVR	SOT-23	DBV	5	3000	179.0	8.4	3.2	3.2	1.4	4.0	8.0	Q3
TPS3823-50DBVT	SOT-23	DBV	5	250	179.0	8.4	3.2	3.2	1.4	4.0	8.0	Q3
TPS3824-25DBVR	SOT-23	DBV	5	3000	179.0	8.4	3.2	3.2	1.4	4.0	8.0	Q3
TPS3824-25DBVT	SOT-23	DBV	5	250	179.0	8.4	3.2	3.2	1.4	4.0	8.0	Q3
TPS3824-30DBVR	SOT-23	DBV	5	3000	179.0	8.4	3.2	3.2	1.4	4.0	8.0	Q3
TPS3824-30DBVT	SOT-23	DBV	5	250	179.0	8.4	3.2	3.2	1.4	4.0	8.0	Q3
TPS3824-33DBVR	SOT-23	DBV	5	3000	179.0	8.4	3.2	3.2	1.4	4.0	8.0	Q3

Device	Package Type	Package Drawing	Pins	SPQ	Reel Diameter (mm)	Reel Width W1 (mm)	A0 (mm)	B0 (mm)	K0 (mm)	P1 (mm)	W (mm)	Pin1 Quadrant
TPS3824-33DBVT	SOT-23	DBV	5	250	179.0	8.4	3.2	3.2	1.4	4.0	8.0	Q3
TPS3824-50DBVR	SOT-23	DBV	5	3000	179.0	8.4	3.2	3.2	1.4	4.0	8.0	Q3
TPS3824-50DBVT	SOT-23	DBV	5	250	179.0	8.4	3.2	3.2	1.4	4.0	8.0	Q3
TPS3825-33DBVR	SOT-23	DBV	5	3000	179.0	8.4	3.2	3.2	1.4	4.0	8.0	Q3
TPS3825-33DBVT	SOT-23	DBV	5	250	179.0	8.4	3.2	3.2	1.4	4.0	8.0	Q3
TPS3825-50DBVR	SOT-23	DBV	5	3000	179.0	8.4	3.2	3.2	1.4	4.0	8.0	Q3
TPS3825-50DBVT	SOT-23	DBV	5	250	179.0	8.4	3.2	3.2	1.4	4.0	8.0	Q3
TPS3828-33DBVR	SOT-23	DBV	5	3000	179.0	8.4	3.2	3.2	1.4	4.0	8.0	Q3
TPS3828-33DBVT	SOT-23	DBV	5	250	179.0	8.4	3.2	3.2	1.4	4.0	8.0	Q3
TPS3828-50DBVR	SOT-23	DBV	5	3000	179.0	8.4	3.2	3.2	1.4	4.0	8.0	Q3
TPS3828-50DBVT	SOT-23	DBV	5	250	179.0	8.4	3.2	3.2	1.4	4.0	8.0	Q3

TAPE AND REEL BOX DIMENSIONS

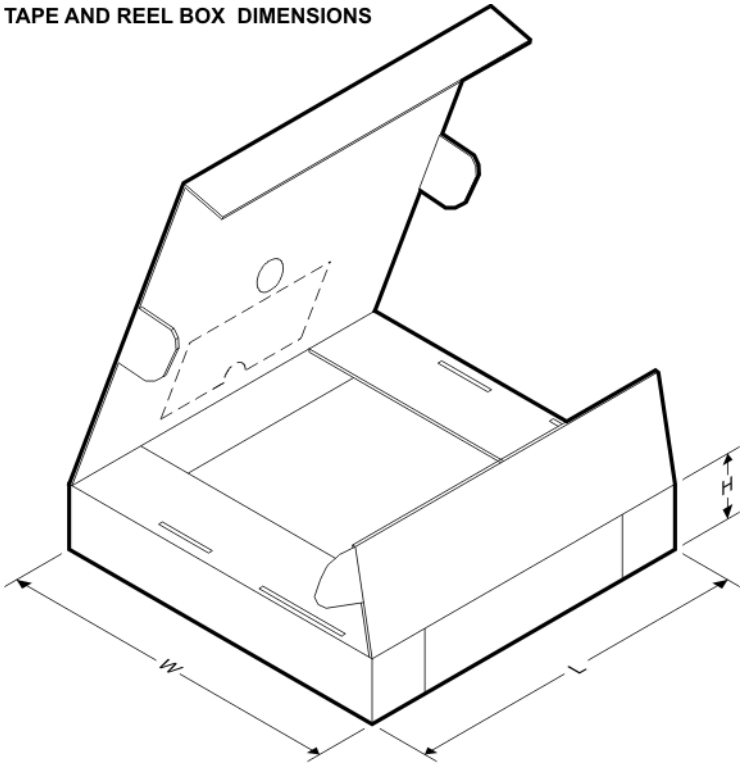

*All dimensions are nominal

Device	Package Type	Package Drawing	Pins	SPQ	Length (mm)	Width (mm)	Height (mm)
TPS3820-33DBVR	SOT-23	DBV	5	3000	195.0	200.0	45.0
TPS3820-33DBVR	SOT-23	DBV	5	3000	182.0	182.0	20.0
TPS3820-33DBVT	SOT-23	DBV	5	250	195.0	200.0	45.0
TPS3820-50DBVR	SOT-23	DBV	5	3000	195.0	200.0	45.0
TPS3820-50DBVT	SOT-23	DBV	5	250	195.0	200.0	45.0
TPS3823-25DBVR	SOT-23	DBV	5	3000	195.0	200.0	45.0

Device	Package Type	Package Drawing	Pins	SPQ	Length (mm)	Width (mm)	Height (mm)
TPS3823-25DBVT	SOT-23	DBV	5	250	195.0	200.0	45.0
TPS3823-30DBVR	SOT-23	DBV	5	3000	195.0	200.0	45.0
TPS3823-30DBVT	SOT-23	DBV	5	250	195.0	200.0	45.0
TPS3823-33DBVR	SOT-23	DBV	5	3000	195.0	200.0	45.0
TPS3823-33DBVT	SOT-23	DBV	5	250	195.0	200.0	45.0
TPS3823-50DBVR	SOT-23	DBV	5	3000	195.0	200.0	45.0
TPS3823-50DBVT	SOT-23	DBV	5	250	195.0	200.0	45.0
TPS3824-25DBVR	SOT-23	DBV	5	3000	195.0	200.0	45.0
TPS3824-25DBVT	SOT-23	DBV	5	250	195.0	200.0	45.0
TPS3824-30DBVR	SOT-23	DBV	5	3000	195.0	200.0	45.0
TPS3824-30DBVT	SOT-23	DBV	5	250	195.0	200.0	45.0
TPS3824-33DBVR	SOT-23	DBV	5	3000	195.0	200.0	45.0
TPS3824-33DBVT	SOT-23	DBV	5	250	195.0	200.0	45.0
TPS3824-50DBVR	SOT-23	DBV	5	3000	195.0	200.0	45.0
TPS3824-50DBVT	SOT-23	DBV	5	250	195.0	200.0	45.0
TPS3825-33DBVR	SOT-23	DBV	5	3000	195.0	200.0	45.0
TPS3825-33DBVT	SOT-23	DBV	5	250	195.0	200.0	45.0
TPS3825-50DBVR	SOT-23	DBV	5	3000	195.0	200.0	45.0
TPS3825-50DBVT	SOT-23	DBV	5	250	195.0	200.0	45.0
TPS3828-33DBVR	SOT-23	DBV	5	3000	195.0	200.0	45.0
TPS3828-33DBVT	SOT-23	DBV	5	250	195.0	200.0	45.0
TPS3828-50DBVR	SOT-23	DBV	5	3000	195.0	200.0	45.0
TPS3828-50DBVT	SOT-23	DBV	5	250	195.0	200.0	45.0

DBV (R–PDSO–G5) PLASTIC SMALL–OUTLINE PACKAGE

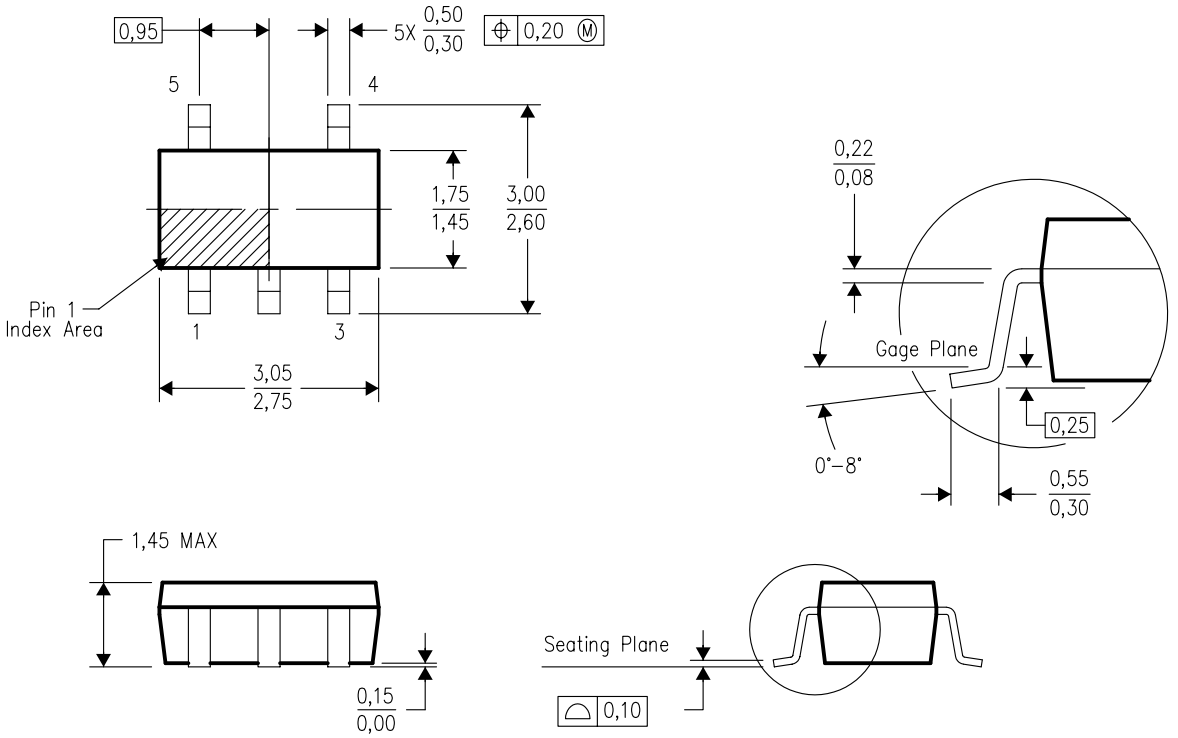

4073253–4/K 03/2006

NOTES:
A. All linear dimensions are in millimeters.
B. This drawing is subject to change without notice.
C. Body dimensions do not include mold flash or protrusion. Mold flash and protrusion shall not exceed 0.15 per side.
D. Falls within JEDEC MO–178 Variation AA.

IMPORTANT NOTICE

Texas Instruments Incorporated and its subsidiaries (TI) reserve the right to make corrections, modifications, enhancements, improvements, and other changes to its products and services at any time and to discontinue any product or service without notice. Customers should obtain the latest relevant information before placing orders and should verify that such information is current and complete. All products are sold subject to TI's terms and conditions of sale supplied at the time of order acknowledgment.

TI warrants performance of its hardware products to the specifications applicable at the time of sale in accordance with TI's standard warranty. Testing and other quality control techniques are used to the extent TI deems necessary to support this warranty. Except where mandated by government requirements, testing of all parameters of each product is not necessarily performed.

TI assumes no liability for applications assistance or customer product design. Customers are responsible for their products and applications using TI components. To minimize the risks associated with customer products and applications, customers should provide adequate design and operating safeguards.

TI does not warrant or represent that any license, either express or implied, is granted under any TI patent right, copyright, mask work right, or other TI intellectual property right relating to any combination, machine, or process in which TI products or services are used. Information published by TI regarding third-party products or services does not constitute a license from TI to use such products or services or a warranty or endorsement thereof. Use of such information may require a license from a third party under the patents or other intellectual property of the third party, or a license from TI under the patents or other intellectual property of TI.

Reproduction of TI information in TI data books or data sheets is permissible only if reproduction is without alteration and is accompanied by all associated warranties, conditions, limitations, and notices. Reproduction of this information with alteration is an unfair and deceptive business practice. TI is not responsible or liable for such altered documentation. Information of third parties may be subject to additional restrictions.

Resale of TI products or services with statements different from or beyond the parameters stated by TI for that product or service voids all express and any implied warranties for the associated TI product or service and is an unfair and deceptive business practice. TI is not responsible or liable for any such statements.

TI products are not authorized for use in safety-critical applications (such as life support) where a failure of the TI product would reasonably be expected to cause severe personal injury or death, unless officers of the parties have executed an agreement specifically governing such use. Buyers represent that they have all necessary expertise in the safety and regulatory ramifications of their applications, and acknowledge and agree that they are solely responsible for all legal, regulatory and safety-related requirements concerning their products and any use of TI products in such safety-critical applications, notwithstanding any applications-related information or support that may be provided by TI. Further, Buyers must fully indemnify TI and its representatives against any damages arising out of the use of TI products in such safety-critical applications.

TI products are neither designed nor intended for use in military/aerospace applications or environments unless the TI products are specifically designated by TI as military-grade or "enhanced plastic." Only products designated by TI as military-grade meet military specifications. Buyers acknowledge and agree that any such use of TI products which TI has not designated as military-grade is solely at the Buyer's risk, and that they are solely responsible for compliance with all legal and regulatory requirements in connection with such use.

TI products are neither designed nor intended for use in automotive applications or environments unless the specific TI products are designated by TI as compliant with ISO/TS 16949 requirements. Buyers acknowledge and agree that, if they use any non-designated products in automotive applications, TI will not be responsible for any failure to meet such requirements.

Following are URLs where you can obtain information on other Texas Instruments products and application solutions:

Products		**Applications**	
Amplifiers	amplifier.ti.com	Audio	www.ti.com/audio
Data Converters	dataconverter.ti.com	Automotive	www.ti.com/automotive
DSP	dsp.ti.com	Broadband	www.ti.com/broadband
Clocks and Timers	www.ti.com/clocks	Digital Control	www.ti.com/digitalcontrol
Interface	interface.ti.com	Medical	www.ti.com/medical
Logic	logic.ti.com	Military	www.ti.com/military
Power Mgmt	power.ti.com	Optical Networking	www.ti.com/opticalnetwork
Microcontrollers	microcontroller.ti.com	Security	www.ti.com/security
RFID	www.ti-rfid.com	Telephony	www.ti.com/telephony
RF/IF and ZigBee® Solutions	www.ti.com/lprf	Video & Imaging	www.ti.com/video
		Wireless	www.ti.com/wireless

Mailing Address: Texas Instruments, Post Office Box 655303, Dallas, Texas 75265
Copyright © 2008, Texas Instruments Incorporated