- **5-Pin SC-70 (SOT-323) Package**
- **Supply Current of 9 μA (Typ)**
- **Power-On Reset Generator With Fixed Delay Time of 200 ms**
- **Precision Supply Voltage Monitor 2.5 V, 3 V, 3.3 V, 5 V**
- **Manual Reset Input**
- **Temperature Range . . . –40°C to 85°C**

**TPS3801 . . . DCK PACKAGE**
**(TOP VIEW)**

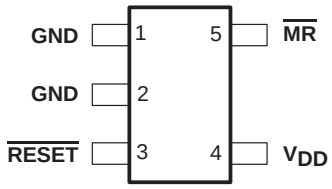


## description

The TPS3801 family of supervisory circuits provide circuit initialization and timing supervision, primarily for DSPs and processor-based systems.

During power-on, $\overline{\text{RESET}}$ is asserted when the supply voltage $V_{DD}$ becomes higher than 1.1 V. Thereafter, the supervisory circuit monitors $V_{DD}$ and keeps $\overline{\text{RESET}}$ active as long as $V_{DD}$ remains below the threshold voltage $V_{IT}$. An internal timer delays the return of the output to the inactive state (high) to ensure proper system reset. The delay time, $t_{d(typ)}$ = 200 ms, starts after $V_{DD}$ has risen above the threshold voltage $V_{IT}$. When the supply voltage drops below the threshold voltage $V_{IT}$, the output becomes active (low) again. No external components are required. All the devices of this family have a fixed sense-threshold voltage $V_{IT}$ set by an internal voltage divider.

The TPS3801 devices incorporate a manual reset input, $\overline{\text{MR}}$. A low level at $\overline{\text{MR}}$ causes $\overline{\text{RESET}}$ to become active.

The product spectrum is designed for supply voltages of 2.5 V, 3 V, 3.3 V, and 5 V. The circuits are available in a 5-pin SC-70 (SOT-323) package which is only about half the size of a 5-pin SOT-23 package.

The TPS3801 devices are characterized for operation over a temperature range of –40°C to 85°C.

## typical applications

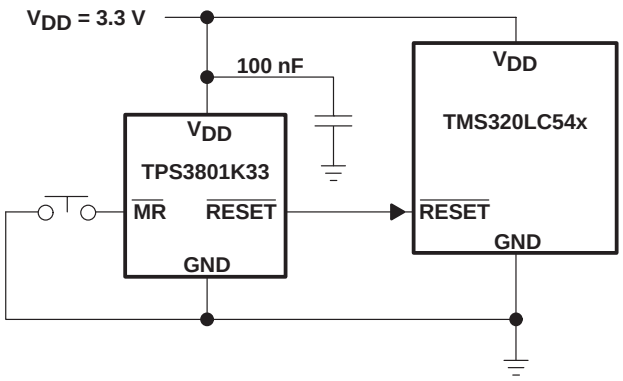


- **Applications Using DSPs, Microcontrollers, or Microprocessors**
- **Wireless Communication Systems**
- **Portable/Battery-Powered Equipment**
- **Programmable Controls**
- **Intelligent Instruments**
- **Industrial Equipment**
- **Notebook/Desktop Computers**
- **Automotive Systems**

Please be aware that an important notice concerning availability, standard warranty, and use in critical applications of Texas Instruments semiconductor products and disclaimers thereto appears at the end of this data sheet.

PRODUCTION DATA information is current as of publication date. Products conform to specifications per the terms of Texas Instruments standard warranty. Production processing does not necessarily include testing of all parameters.

Copyright © 1999, Texas Instruments Incorporated

**AVAILABLE OPTIONS**

| $T_A$ | DEVICE NAME | THRESHOLD VOLTAGE | MARKING |
|---|---|---|---|
| –40°C to 85°C | TPS3801J25DCK | 2.25 V | NJA |
| | TPS3801L30DCK | 2.64 V | NPA |
| | TPS3801K33DCK | 2.93 V | NWA |
| | TPS3801I50DCK | 4.55 V | NSA |

**FUNCTION/TRUTH TABLE, TPS3801**

| $\overline{MR}$ | $V_{DD}>V_{IT}$ | $\overline{RESET}$ |
|---|---|---|
| L | 0 | L |
| L | 1 | L |
| H | 0 | L |
| H | 1 | H |

**ORDERING INFORMATION**

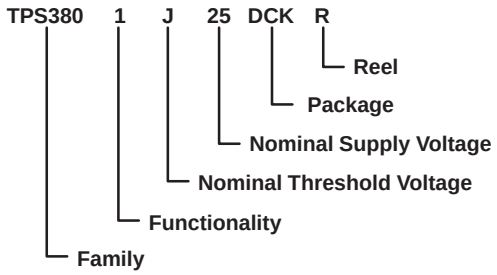


## functional block diagram

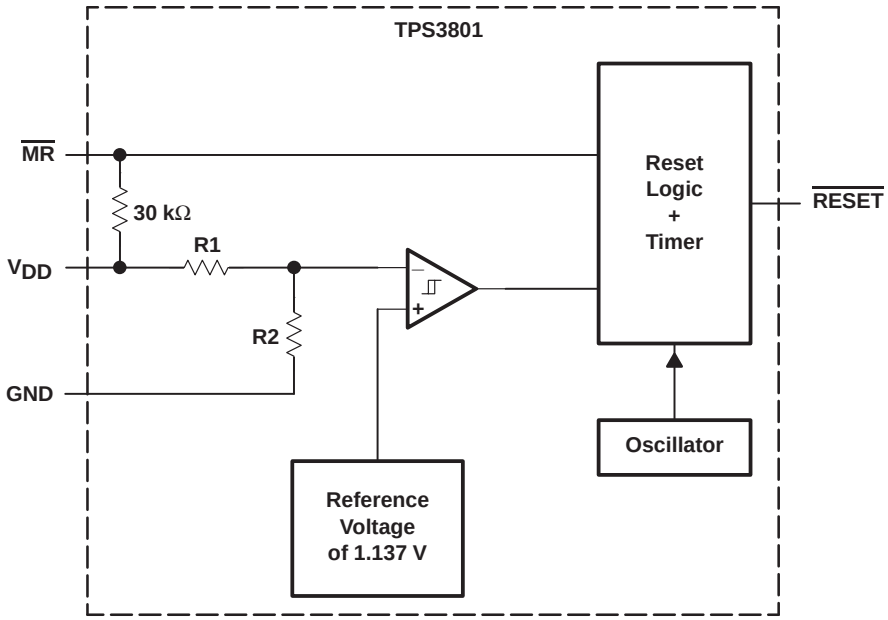

## timing diagram

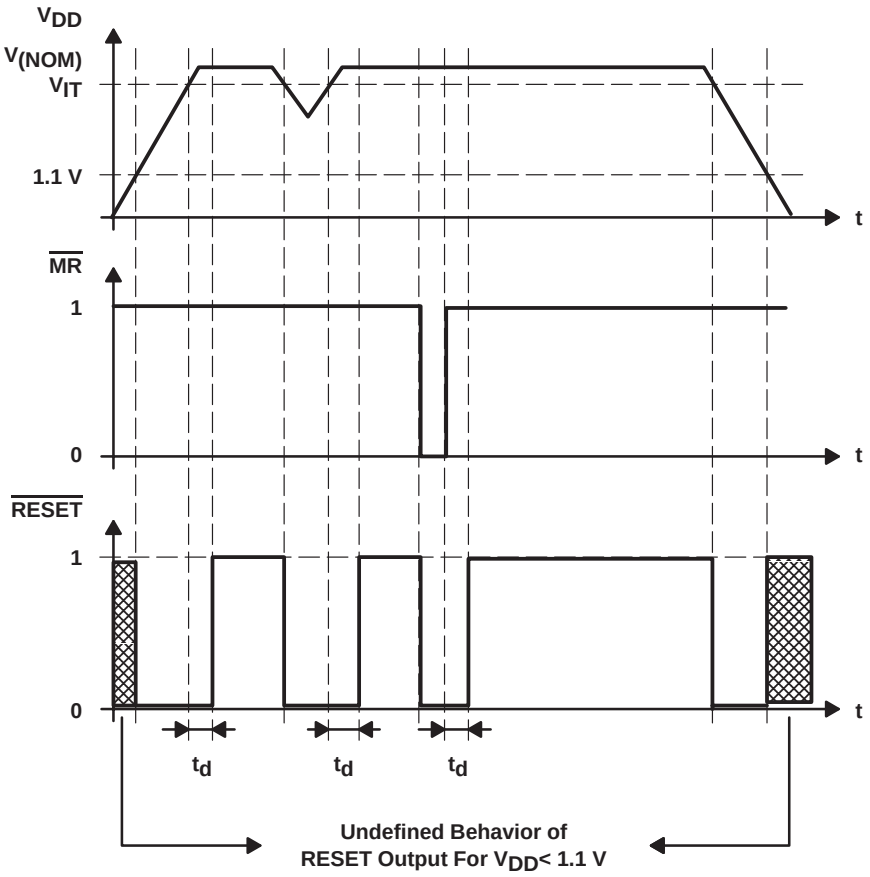

### absolute maximum ratings over operating free-air temperature (unless otherwise noted)†

Supply voltage, $V_{DD}$ (see Note1) . . . . . 7 V
All other pins (see Note 1) . . . . . –0.3 V to 7 V
Maximum low output current, $I_{OL}$ . . . . . 5 mA
Maximum high output current, $I_{OH}$ . . . . . –5 mA
Input clamp current, $I_{IK}$ ($V_I$<0 or $V_I$>$V_{DD}$) . . . . . ±20 mA
Output clamp current, $I_{OK}$ ($V_O$<0 or $V_O$>$V_{DD}$) . . . . . ±20 mA
Continuous total power dissipation . . . . . See Dissipation Rating Table
Operating free-air temperature range, $T_A$ . . . . . –40°C to 85°C
Storage temperature range, $T_{stg}$ . . . . . –65°C to 150°C
Soldering temperature . . . . . 260°C

† Stresses beyond those listed under “absolute maximum ratings” may cause permanent damage to the device. These are stress ratings only, and functional operation of the device at these or any other conditions beyond those indicated under “recommended operating conditions” is not implied. Exposure to absolute–maximum–rated conditions for extended periods may affect device reliability.

NOTE 1: All voltage values are with respect to GND. For reliable operation the device should not be operated at 7 V for more than t=1000h continuously.

**DISSIPATION RATING TABLE**

| PACKAGE | $T_A$ <25°C POWER RATING | DERATING FACTOR ABOVE $T_A$ = 25°C | $T_A$ = 70°C POWER RATING | $T_A$ = 85°C POWER RATING |
|---|---|---|---|---|
| DCK | 321 mW | 2.6 mW/°C | 206 mW | 167 mW |

### recommended operating conditions at specified temperature range

| | MIN | MAX | UNIT |
|---|---|---|---|
| Supply voltage, $V_{DD}$ | 2 | 6 | V |
| Input voltage, $V_I$ | 0 | $V_{DD}$+0.3 | V |
| High-level input voltage, $V_{IH}$ | 0.7×$V_{DD}$ | | V |
| Low-level input voltage, $V_{IL}$ | | 0.3×$V_{DD}$ | V |
| Input transition rise and fall rate at $\overline{MR}$, $\Delta t/\Delta V$ | | 100 | ns/V |
| Operating free-air temperature range, $T_A$ | –40 | 85 | °C |

## electrical characteristics over recommended operating free-air temperature range (unless otherwise noted)

| PARAMETER | | | TEST CONDITIONS | | MIN | TYP | MAX | UNIT |
|---|---|---|---|---|---|---|---|---|
| $V_{OH}$ | High-level output voltage | | $V_{DD}$ = 2.5 V to 6 V | $I_{OH}$ = –500 µA | $V_{DD}$ –0.2 | | | V |
| | | | $V_{DD}$ = 3.3 V | $I_{OH}$ = –2 mA | $V_{DD}$ –0.4 | | | |
| | | | $V_{DD}$ = 6 V | $I_{OH}$ = –4 mA | $V_{DD}$ –0.4 | | | |
| $V_{OL}$ | Low-level output voltage | | $V_{DD}$ = 2 V to 6 V, | $I_{OL}$ = 500 µA | | | 0.2 | V |
| | | | $V_{DD}$ = 3.3 V, | $I_{OL}$ = 2 mA | | | 0.4 | |
| | | | $V_{DD}$ = 6 V, | $I_{OL}$ = 4 mA | | | 0.4 | |
| | Power-up reset voltage (see Note 2) | | $V_{DD} \geq$ 1.1 V, | $I_{OL}$ = 50 µA | | | 0.2 | V |
| $V_{IT–}$ | Negative-going input threshold voltage (see Note 3) | TPS3801J25 | $T_A$ = –40°C to +85°C | | 2.20 | 2.25 | 2.30 | V |
| | | TPS3801L30 | | | 2.58 | 2.64 | 2.70 | |
| | | TPS3801K33 | | | 2.87 | 2.93 | 2.99 | |
| | | TPS3801I50 | | | 4.45 | 4.55 | 4.65 | |
| $V_{hys}$ | Hysteresis | TPS3801J25 | | | | 30 | | mV |
| | | TPS3801L30 | | | | 35 | | |
| | | TPS3801K33 | | | | 40 | | |
| | | TPS3801I50 | | | | 60 | | |
| $I_{IH}$ | High-level input current | MR | $\overline{MR}$ = 0.7×$V_{DD}$, | $V_{DD}$ = 6 V | –40 | –60 | –100 | µA |
| $I_{IL}$ | Low-level input current | | $\overline{MR}$ = 0 V, | $V_{DD}$ = 6 V | –130 | –200 | –340 | |
| $I_{DD}$ | Supply current | | $V_{DD}$ = 2 V, $\overline{MR}$ and output unconnected | | | 9 | 12 | µA |
| | | | $V_{DD}$ = 6 V, $\overline{MR}$ and output unconnected | | | 20 | 25 | |
| $C_i$ | Input capacitance | | $V_I$ = 0 V to $V_{DD}$ | | | 5 | | pF |

NOTES: 2. The lowest supply voltage at which $\overline{RESET}$ becomes active. $t_{r,\ VDD} \geq$ 15 µs/V.
3. To ensure best stability of the threshold voltage, a bypass capacitor ( 0.1 µF ceramic) should be placed near the supply terminals.

## timing requirements at $R_L$ = 1 MΩ, $C_L$ = 50 pF, $T_A$ = 25°C

| PARAMETER | | | TEST CONDITIONS | | MIN | TYP | MAX | UNIT |
|---|---|---|---|---|---|---|---|---|
| $t_w$ | Pulse width | at $V_{DD}$ | $V_{DD}$ = $V_{IT–}$ + 0.2 V, | $V_{DD}$ = $V_{IT–}$ –0.2 V | 3 | | | µs |
| | | at $\overline{MR}$ | $V_{DD} \geq V_{IT–}$ + 0.2V, | $V_{IL}$ = 0.3 × $V_{DD}$, $V_{IH}$ = 0.7 × $V_{DD}$ | 100 | | | ns |

## switching characteristics at $R_L$ = 1 MΩ, $C_L$ = 50 pF, $T_A$ = 25°C

| PARAMETER | | | TEST CONDITIONS | MIN | TYP | MAX | UNIT |
|---|---|---|---|---|---|---|---|
| $t_d$ | Delay time | | $V_{DD} \geq V_{IT–}$ + 0.2 V, $\overline{MR} \geq$ 0.7 × $V_{DD}$ See timing diagram | 120 | 200 | 280 | ms |
| $t_{PHL}$ | Propagation (delay) time, high-to-low-level output | $\overline{MR}$ to $\overline{RESET}$ delay | $V_{DD} \geq V_{IT–}$ + 0.2 V, $V_{IL}$ = 0.3 × $V_{DD}$, $V_{IH}$ = 0.7 × $V_{DD}$ | | 15 | | ns |
| | | $V_{DD}$ to $\overline{RESET}$ delay | $V_{IL}$ = $V_{IT–}$ – 0.2 V, $V_{IH}$ = $V_{IT–}$ + 0.2 V | | 1 | | µs |

## TYPICAL CHARACTERISTICS

**LOW-LEVEL OUTPUT VOLTAGE vs LOW-LEVEL OUTPUT CURRENT**

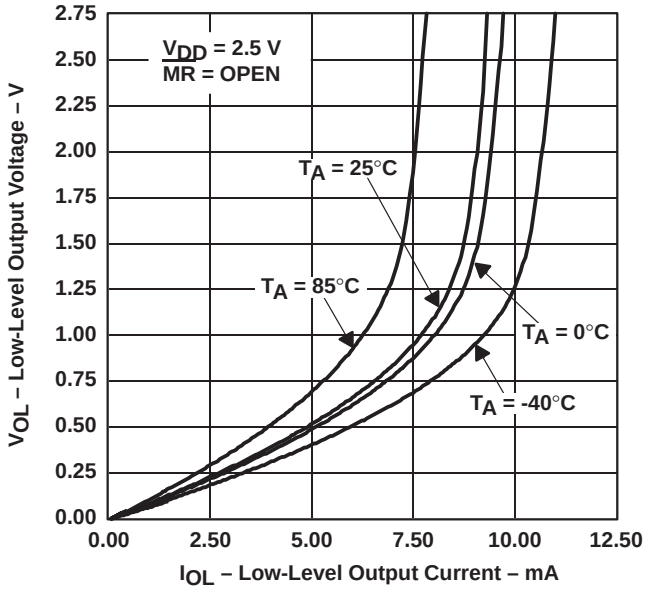


Figure 1

**SUPPLY CURRENT vs SUPPLY VOLTAGE**

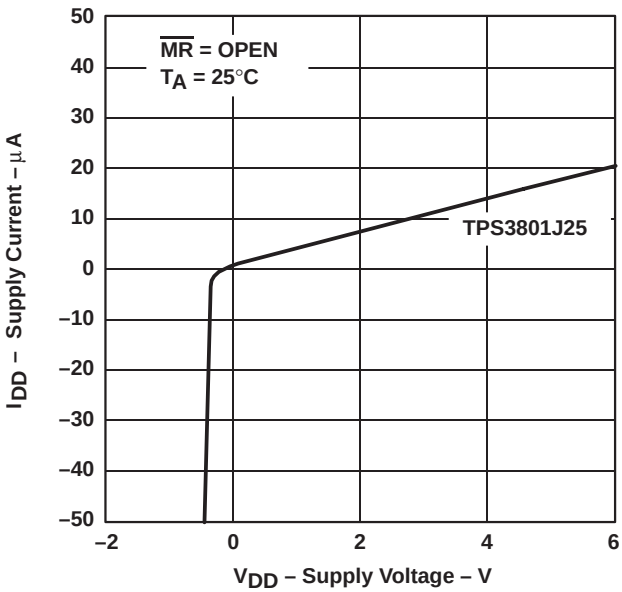


Figure 2

**HIGH-LEVEL OUTPUT VOLTAGE vs HIGH-LEVEL OUTPUT CURRENT**

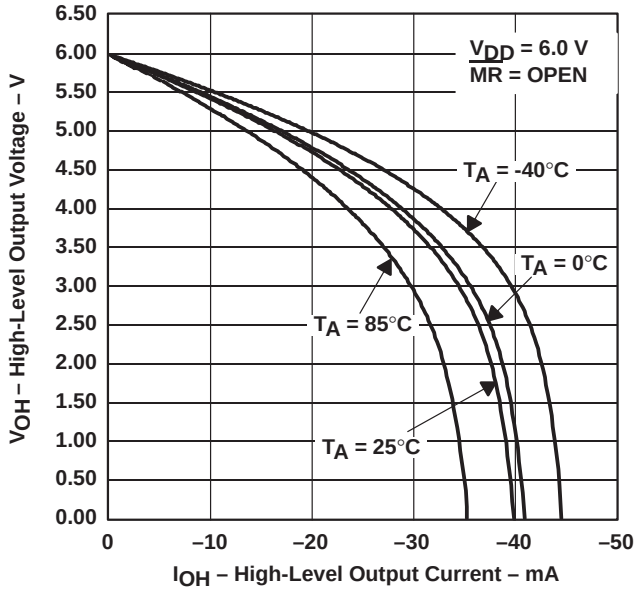


Figure 3

**HIGH-LEVEL OUTPUT VOLTAGE vs HIGH-LEVEL OUTPUT CURRENT**

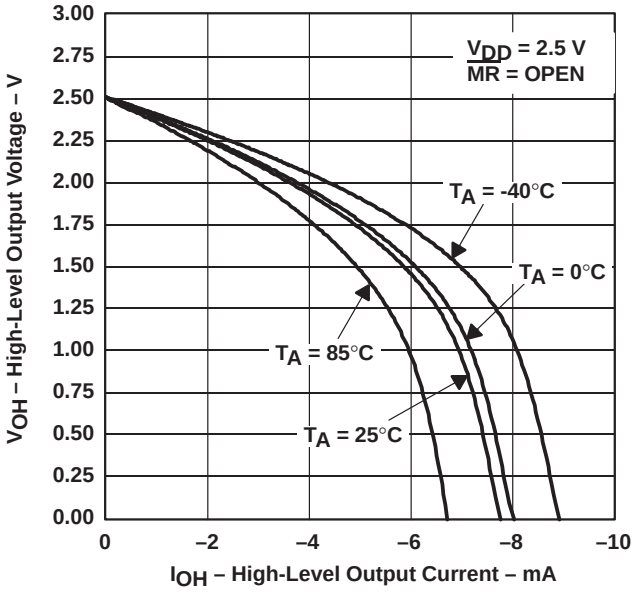


Figure 4

## TYPICAL CHARACTERISTICS

**INPUT CURRENT vs INPUT VOLTAGE AT $\overline{MR}$**

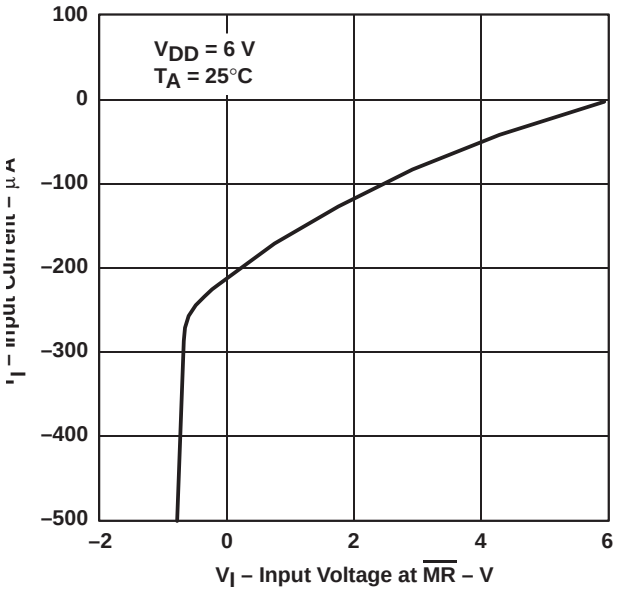


Figure 5

**NORMALIZED INTPUT THRESHOLD VOLTAGE vs FREE-AIR TEMPERATURE AT $V_{DD}$**

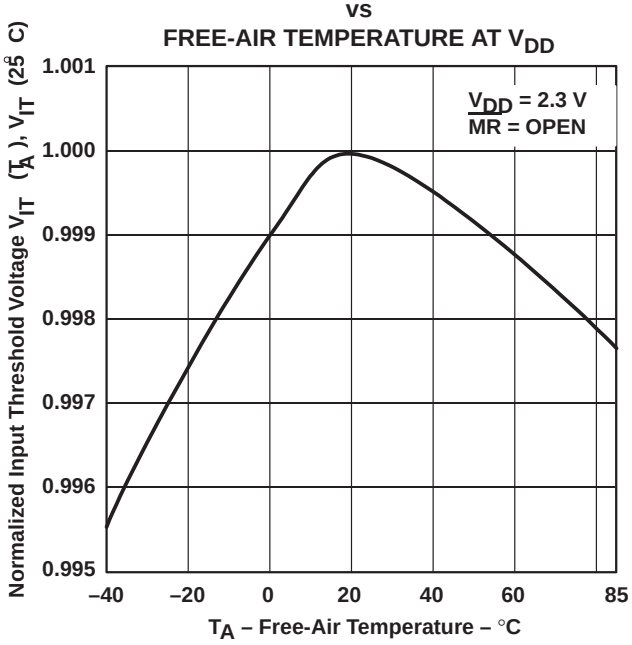


Figure 6

**MINIMUM PULSE DURATION AT $V_{DD}$ vs $V_{DD}$ THRESHOLD OVERDRIVE VOLTAGE**

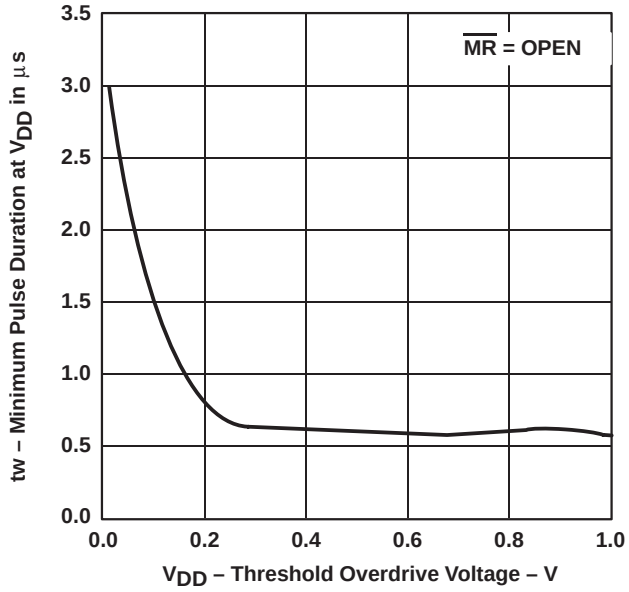


Figure 7

## MECHANICAL DATA

### DCK (R-PDSO-G5) PLASTIC SMALL-OUTLINE PACKAGE

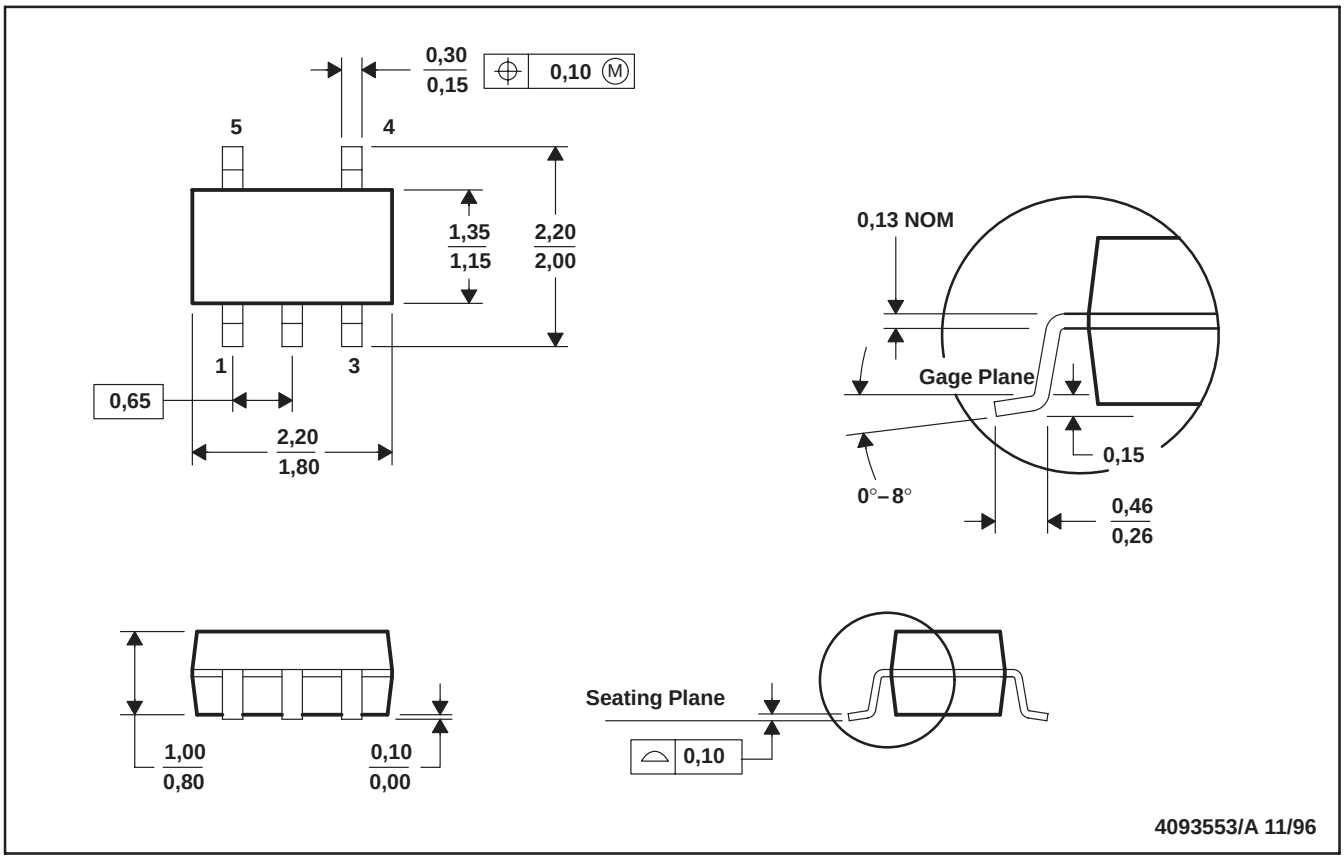


NOTES: A. All linear dimensions are in millimeters.
B. This drawing is subject to change without notice.
C. Body dimensions include mold flash or protrusion.

## IMPORTANT NOTICE

Texas Instruments and its subsidiaries (TI) reserve the right to make changes to their products or to discontinue any product or service without notice, and advise customers to obtain the latest version of relevant information to verify, before placing orders, that information being relied on is current and complete. All products are sold subject to the terms and conditions of sale supplied at the time of order acknowledgement, including those pertaining to warranty, patent infringement, and limitation of liability.

TI warrants performance of its semiconductor products to the specifications applicable at the time of sale in accordance with TI's standard warranty. Testing and other quality control techniques are utilized to the extent TI deems necessary to support this warranty. Specific testing of all parameters of each device is not necessarily performed, except those mandated by government requirements.

CERTAIN APPLICATIONS USING SEMICONDUCTOR PRODUCTS MAY INVOLVE POTENTIAL RISKS OF DEATH, PERSONAL INJURY, OR SEVERE PROPERTY OR ENVIRONMENTAL DAMAGE ("CRITICAL APPLICATIONS"). TI SEMICONDUCTOR PRODUCTS ARE NOT DESIGNED, AUTHORIZED, OR WARRANTED TO BE SUITABLE FOR USE IN LIFE-SUPPORT DEVICES OR SYSTEMS OR OTHER CRITICAL APPLICATIONS. INCLUSION OF TI PRODUCTS IN SUCH APPLICATIONS IS UNDERSTOOD TO BE FULLY AT THE CUSTOMER'S RISK.

In order to minimize risks associated with the customer's applications, adequate design and operating safeguards must be provided by the customer to minimize inherent or procedural hazards.

TI assumes no liability for applications assistance or customer product design. TI does not warrant or represent that any license, either express or implied, is granted under any patent right, copyright, mask work right, or other intellectual property right of TI covering or relating to any combination, machine, or process in which such semiconductor products or services might be or are used. TI's publication of information regarding any third party's products or services does not constitute TI's approval, warranty or endorsement thereof.

Copyright © 1999, Texas Instruments Incorporated