TPS255x-Q1 Precision Automotive Adjustable Current-Limited Power-Distribution Switches

1 Features

- AEC-Q100 Qualified
  - Device HBM ESD Classification Level H2
  - Device CDM ESD Classification Level C5
- Meets USB Current-Limiting Requirements
- Adjustable Current Limit, 500 mA–5 A (Typ.)
- ±6.5% Current-Limit Accuracy at 4.5 A
- Fast Short-Circuit Response – 3.5-µs (Typ.)
- 22-mΩ High-Side MOSFET
- Operating Range: 2.5 V to 6.5 V
- 2-µA Maximum Standby Supply Current
- Built-In Soft-Start
- 15-kV and 8-kV System-Level ESD Capable

2 Application

Automotive USB Charging Ports

3 Description

The TPS2556-Q1 and TPS2557-Q1 power-distribution switches are specialized for automotive applications which require precision current limiting or capacity to handle heavy capacitive loads and short circuits. These devices offer a programmable current-limit threshold between 500 mA and 5 A (typical) via an external resistor. Control of the power-switch rise and fall times minimizes current surges during turnon or turnoff.

TPS2556-Q1 and TPS2557-Q1 devices limit the output current to a safe level by switching into a constant-current mode when the output load exceeds the current-limit threshold. The $\overline{\text{FAULT}}$ logic output asserts low during overcurrent and overtemperature conditions.

Use with the TPS2511-Q1 or TPS2513A-Q1 for a low-loss, automotive-qualified, USB charging-port solution capable of charging all of today's popular phones and tablets.

Device Information

ORDER NUMBER	PACKAGE	BODY SIZE
TPS2556QDRB	S-PVSON (8)	3 mm × 3 mm
TPS2557QDRB	S-PVSON (8)	3 mm × 3 mm

Typical Application as Power Switch of Single-Port Automotive USB Charge Port

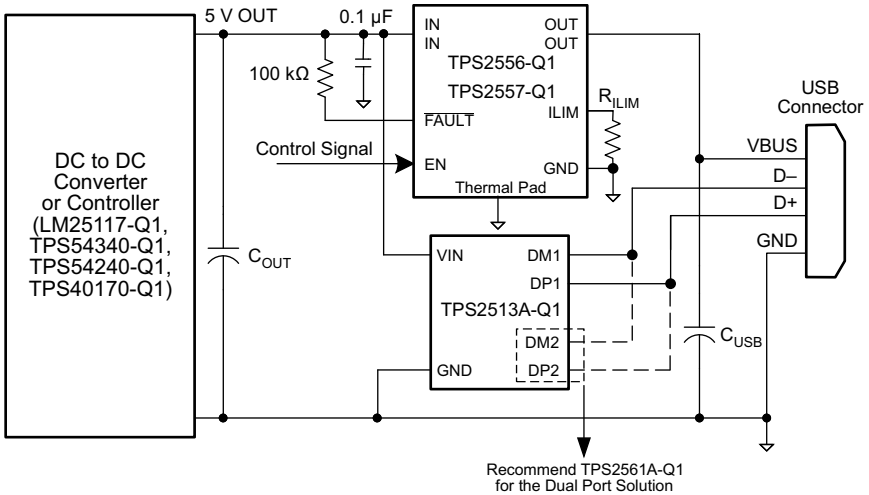

An IMPORTANT NOTICE at the end of this data sheet addresses availability, warranty, changes, use in safety-critical applications, intellectual property matters and other important disclaimers. PRODUCTION DATA.

Table of Contents

1 Features ... 1
2 Application ... 1
3 Description ... 1
4 Revision History ... 2
5 Terminal Configuration and Functions ... 3
6 Specifications ... 3
6.1 Absolute Maximum Ratings ... 3
6.2 Handling Ratings ... 4
6.3 Recommended Operating Conditions ... 4
6.4 Thermal Information ... 4
6.5 Electrical Characteristics ... 5
6.6 Switching Characteristics ... 5
6.7 Typical Characteristics ... 6
7 Parameter Measurement Information ... 7
8 Detailed Description ... 8
8.1 Overview ... 8
8.2 Functional Block Diagram ... 9
8.3 Feature Description ... 9
8.4 Device Functional Modes ... 10
9 Applications and Implementation ... 12
9.1 Application Information ... 12
9.2 Typical Application, Design for Current Limit ... 12
10 Power Supply Recommendations ... 17
11 Layout ... 18
11.1 Layout Guidelines ... 18
11.2 Layout Example ... 18
12 Device and Documentation Support ... 19
12.1 Related Links ... 19
12.2 Trademarks ... 19
12.3 Electrostatic Discharge Caution ... 19
12.4 Glossary ... 19
13 Mechanical, Packaging, and Orderable Information ... 20

4 Revision History

Changes from Original (March 2014) to Revision A **Page**

- Changed part number in Description from TPS2511-Q to TPS2511-Q1 ... 1
- Changed CURRENT LIMIT values in Electrical Characteristics table ... 5
- Changed Equation 1 ... 13
- Revised Figure 16 graph ... 13
- Changed Equation 2 ... 13
- Changed resistor value from 33.2 kΩ to 33.6 kΩ ... 13
- Changed Equation 3 ... 13
- Changed Equation 4 ... 14
- Changed current-limit threshold from 4 316 mA to 4 406 mA ... 14
- Changed values in Table 2 ... 15

Copyright © 2014, Texas Instruments Incorporated

Device Comparison Table

DEVICE	MAX. OPERATING CURRENT (A)	OUTPUTS	ENABLES	TYPICAL $r_{DS(on)}$ (mΩ)
TPS2556-Q1	5	1	Active-low	22
TPS2557-Q1	5	1	Active-high	22
TPS2561A-Q1	2.5	2	Active-high	44

5 Terminal Configuration and Functions

8-Terminal S-PVSON With Thermal Pad
DRB Package
(Top View)

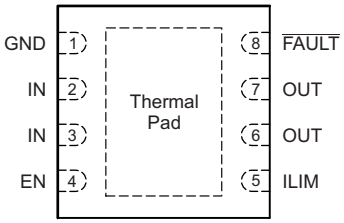

EN = Active-low for the TPS2556-Q1
EN = Active-high for the TPS2557-Q1

Terminal Functions

TERMINAL			I/O	DESCRIPTION
NAME	TPS2556-Q1	TPS2557-Q1		
$\overline{EN}$	4	–	I	Enable input, logic low turns on power switch
EN	–	4	I	Enable input, logic high turns on power switch
GND	1	1	–	Ground connection; connect externally to PowerPAD
IN	2, 3	2, 3	I	Input voltage; connect a 0.1 µF or greater ceramic capacitor from IN to GND as close to the IC as possible.
$\overline{FAULT}$	8	8	O	Active-low open-drain output, asserted during overcurrent or overtemperature conditions.
OUT	6, 7	6, 7	O	Power-switch output
ILIM	5	5	O	External resistor used to set current-limit threshold; recommended 20 kΩ ≤ $R_{(ILIM)}$ ≤ 187 kΩ.
Thermal pad	–	–	–	Internally connected to GND; used to heat-sink the part to the circuit board traces. Connect therma pad to GND terminal externally.

6 Specifications

6.1 Absolute Maximum Ratings

over operating free-air temperature range unless otherwise noted(1)(2)

		MIN	MAX(2)	UNIT
	Voltage range on IN, OUT, EN or $\overline{EN}$, ILIM, $\overline{FAULT}$	–0.3	7	V
	Voltage range from IN to OUT	–7	7	V
I	Continuous output current		Internally limited	
	Continuous $\overline{FAULT}$ sink current		25	mA
	ILIM source current		Internally limited	mA
T_J	Maximum junction temperature	–40	Internally limited	°C

(1) Stresses beyond those listed under *Absolute Maximum Ratings* may cause permanent damage to the device. These are stress ratings only, which do not imply functional operation of the device at these or any other conditions beyond those indicated under *Recommended Operating Conditions*. Exposure to absolute-maximum-rated conditions for extended periods may affect device reliability.
(2) Voltages are referenced to GND unless otherwise noted.

Copyright © 2014, Texas Instruments Incorporated

6.2 Handling Ratings

PARAMETER			MIN	MAX	UNIT
T_{stg}	Storage temperature range		–65	150	°C
$V_{(ESD)}$ (1)	Human-body model (HBM) ESD stress voltage (2)		–2	2	kV
	Charged-device model (CDM) ESD stress voltage (3)		–750	750	V
	System level (4)	Contact discharge	–8	8	kV
		Air discharge	–15	15	

(1) Electrostatic discharge (ESD) to measure device sensitivity or immunity to damage caused by assembly-line electrostatic discharges into the device.
(2) The passing level per AEC-Q100 Classification H2.
(3) The passing level per AEC-Q100 Classification C5.
(4) Surges per EN61000-4-2, 1999 applied between USB connection for $V_{(BUS)}$ and ground of the TPS2556EVM (HPA423, replacing TPS2556 with TPS2556-Q1) evaluation module (SLUU393). These were the test levels, not the failure threshold.

6.3 Recommended Operating Conditions

			MIN	MAX	UNIT
$V_{(IN)}$	Input voltage, IN		2.5	6.5	V
$V_{(\overline{EN})}$	Enable voltage	TPS2556-Q1	0	6.5	V
$V_{(EN)}$		TPS2557-Q1	0	6.5	
V_{IH}	High-level input voltage on EN or $\overline{EN}$		1.1		V
V_{IL}	Low-level input voltage on EN or $\overline{EN}$			0.66	
$I_{(OUT)}$	Continuous output current, OUT		0	5	A
	Continuous $\overline{FAULT}$ sink current		0	10	mA
T_J	Operating junction temperature		–40	125	°C
$R_{(ILIM)}$	Recommendedlimit-resistor range		20	187	kΩ

6.4 Thermal Information

THERMAL METRIC (1)		TPS2556-Q1, TPS2557-Q1 DRB 8 TERMINALS	UNIT
$R_{\theta JA}$	Junction-to-ambient thermal resistance	41.5	°C/W
$R_{\theta JC(top)}$	Junction-to-case (top) thermal resistance	56	°C/W
$R_{\theta JB}$	Junction-to-board thermal resistance	16.4	°C/W
ψ_{JT}	Junction-to-top characterization parameter	0.7	°C/W
ψ_{JB}	Junction-to-board characterization parameter	16.5	°C/W
$R_{\theta JC(bot)}$	Junction-to-case (bottom) thermal resistance	3.5	°C/W

(1) For more information about traditional and new thermal metrics, see the *IC Package Thermal Metrics* application report, SPRA953.

Copyright © 2014, Texas Instruments Incorporated

6.5 Electrical Characteristics

over recommended operating conditions, $V_{\overline{EN}}$ = 0 V, or V_{EN} = V_{IN} (unless otherwise noted)

PARAMETER		TEST CONDITIONS[1]		MIN	TYP	MAX	UNIT
POWER SWITCH							
$r_{DS(on)}$	Static drain-source on-state resistance	T_J = 25°C			22	25	mΩ
		–40 °C ≤ T_J ≤ 125°C				35	
ENABLE INPUT EN OR $\overline{EN}$							
	Enable terminal turnon or turnoff threshold			0.66		1.1	V
	Hysteresis				55[2]		mV
$I_{(EN)}$	Input current	$V_{(EN)}$ = 0 V or 6.5 V, or $V_{(\overline{EN})}$ = 0 V or 6.5 V		–0.5		0.5	µA
CURRENT LIMIT							
I_{OS}	Current-limit threshold (maximum dc output current $I_{(OUT)}$ delivered to load) and short-circuit current, OUT connected to GND		$R_{(ILIM)}$ = 24.9 kΩ	4180	4500	4745	mA
			$R_{(ILIM)}$ = 61.9 kΩ	1610	1805	1980	
			$R_{(ILIM)}$ = 100 kΩ	945	1110	1270	
SUPPLY CURRENT							
$I_{(IN_off)}$	Supply current, low-level output	$V_{(IN)}$ = 6.5 V, no load on OUT, $V_{(\overline{EN})}$ = 6.5 V or $V_{(EN)}$ = 0 V			0.1	2.5	µA
$I_{(IN_on)}$	Supply current, high-level output	$V_{(IN)}$ = 6.5 V, no load on OUT	$R_{(ILIM)}$ = 24.9 kΩ		95	120	µA
			$R_{(ILIM)}$ = 100 kΩ		85	110	µA
$I_{(REV)}$	Reverse leakage current	$V_{(OUT)}$ = 6.5 V, V_{IN} = 0 V	T_J = 25 °C		0.01	1	µA
UNDERVOLTAGE LOCKOUT							
$V_{(UVLO)}$	Low-level input voltage, IN	$V_{(IN)}$ rising			2.35	2.45	V
	Hysteresis, IN				35[2]		mV
$\overline{FAULT}$ FLAG							
V_{OL}	Output low voltage, $\overline{FAULT}$	$I_{(\overline{FAULT})}$ = 1 mA				180	mV
	Off-state leakage	$V_{(\overline{FAULT})}$ = 6.5 V				1	µA
	$\overline{FAULT}$ deglitch	$\overline{FAULT}$ assertion or de-assertion due to overcurrent condition		6	9	13	ms
THERMAL SHUTDOWN							
$T_{(OTSD2)}$	Thermal shutdown threshold			155			°C
$T_{(OTSD)}$	Thermal shutdown threshold in current-limit			135			°C
	Hysteresis				20[2]		°C

(1) Pulse-testing techniques maintain junction temperature close to ambient temperature; thermal effects must be taken into account separately.
(2) These parameters are provided for reference only, and do no constitute part of TI's published specifications for purposes of TI's product warranty.

6.6 Switching Characteristics

				MIN	TYP	MAX	UNIT
t_r	Rise time, output	V_{IN} = 6.5 V	C_L = 1 µF, R_L = 100 Ω, (see Figure 9)	2	3	4	ms
		V_{IN} = 2.5 V		1	2	3	
t_f	Fall time, output	V_{IN} = 6.5 V		0.6	0.8	1.0	
		V_{IN} = 2.5 V		0.4	0.6	0.8	
t_{on}	Turnon time	C_L = 1 µF, R_L = 100 Ω, (see Figure 9)				9	ms
t_{off}	Turnoff time					6	ms
$t_{(IOS)}$	Response time to short circuit	$V_{(IN)}$ = 5 V (see Figure 10)			3.5[1]		µs

(1) These parameters are provided for reference only, and do no constitute part of TI's published specifications for purposes of TI's product warranty.

Copyright © 2014, Texas Instruments Incorporated

6.7 Typical Characteristics

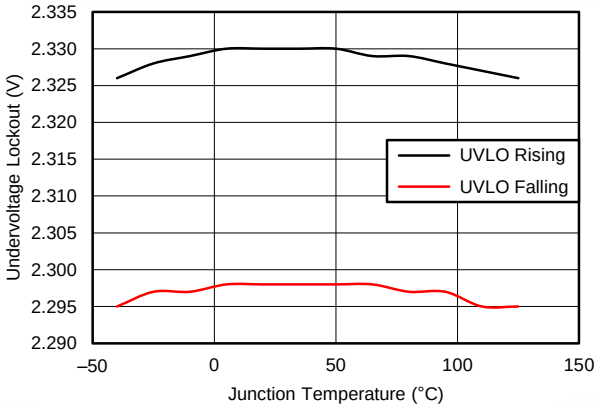

Figure 1. UVLO – Undervoltage Lockout – V

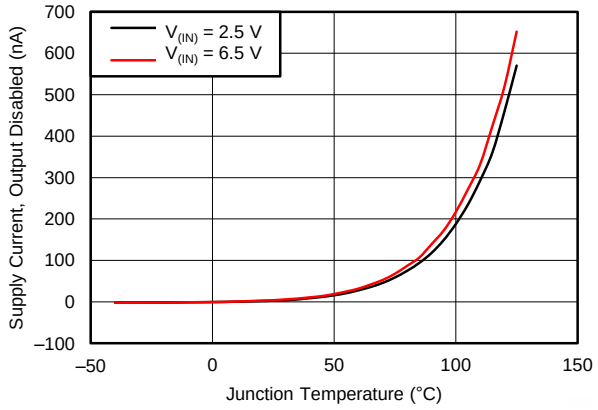

Figure 2. I_{IN} – Supply Current, Output Disabled – nA

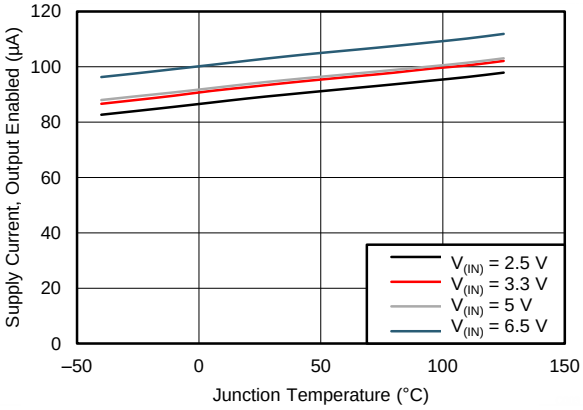

$R_{(ILIM)}$ = 24.9 kΩ

Figure 3. I_{IN} – Supply Current, Output Enabled – µA

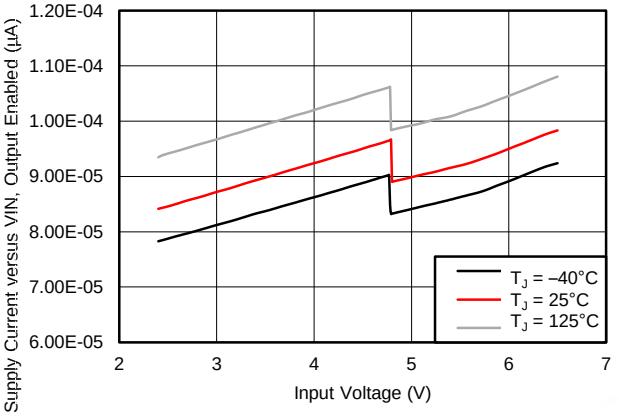

$R_{(ILIM)}$ = 24.9 kΩ

Figure 4. I_{IN} – Supply Current, Output Enabled – µA

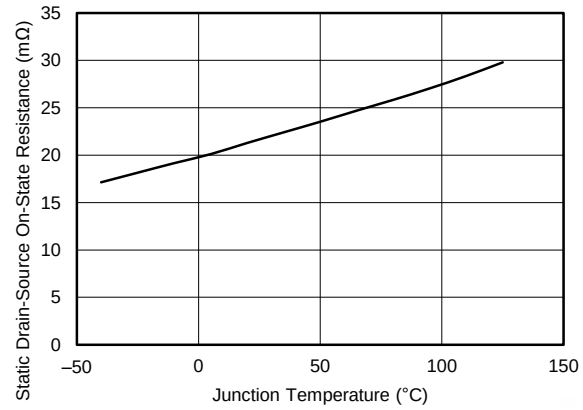

Figure 5. MOSFET $r_{DS(on)}$ Versus Junction Temperature

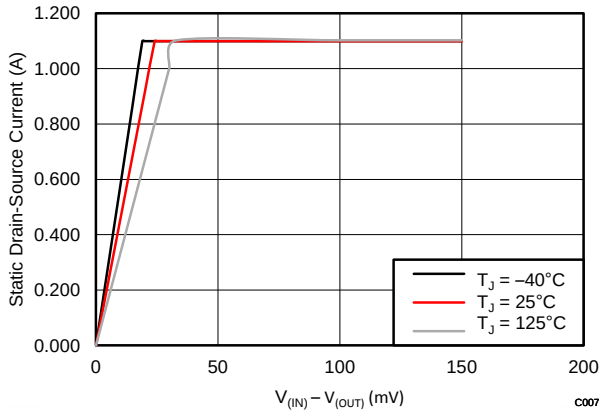

$R_{(ILIM)}$ = 100 kΩ

Figure 6. Switch Current Versus Drain-Source Voltage Across Switch

Copyright © 2014, Texas Instruments Incorporated

Typical Characteristics (continued)

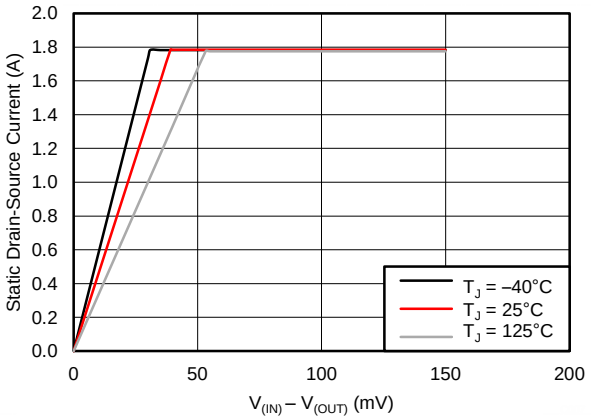

$R_{(ILIM)}$ = 61.9 kΩ

Figure 7. Switch Current Versus Drain-Source Voltage Across Switch

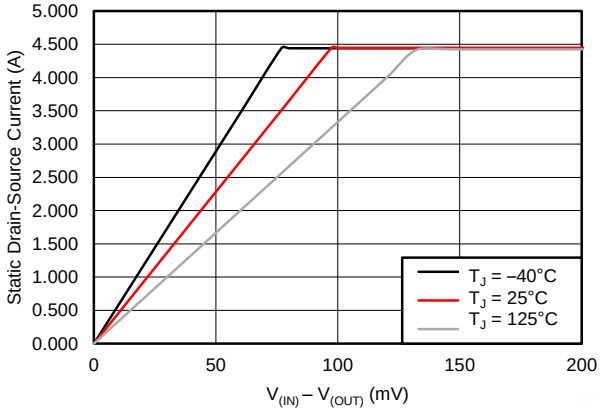

$R_{(ILIM)}$ = 24.9 kΩ

Figure 8. Switch Current Versus Drain-Source Voltage Across Switch

7 Parameter Measurement Information

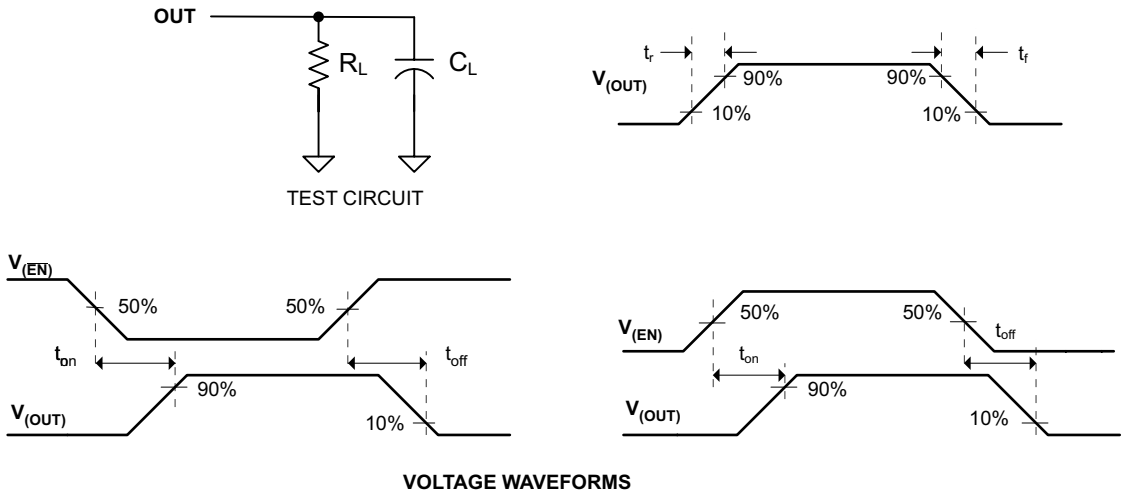

Figure 9. Test Circuit and Voltage Waveforms

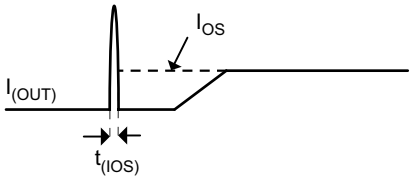

Figure 10. Response Time to Short-Circuit Waveform

Parameter Measurement Information (continued)

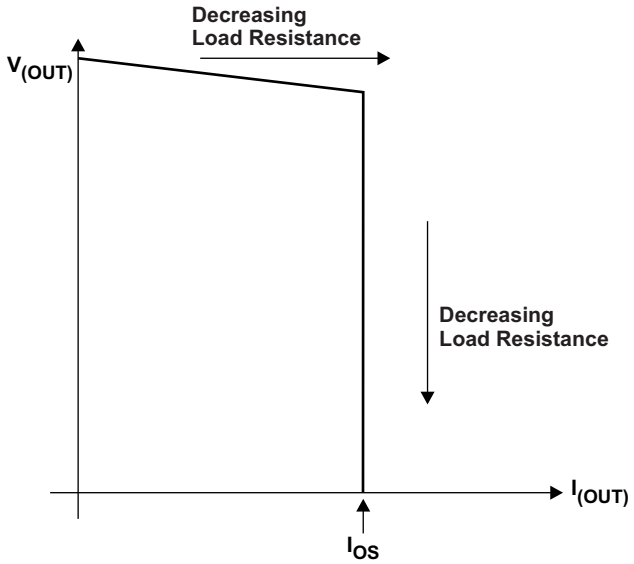

Figure 11. Output Voltage Versus Current-Limit Threshold

8 Detailed Description

8.1 Overview

The TPS2556-Q1 and TPS2557-Q1 are current-limited, power-distribution switches using N-channel MOSFETs for applications that might encounter short circuits or heavy capacitive loads . This device allows the user to program the current-limit threshold between 500 mA and 5 A (typical) via an external resistor. This device incorporates an internal charge pump and the gate-drive circuitry necessary to drive the N-channel MOSFET. The charge pump supplies power to the driver circuit and provides the necessary voltage to pull the gate of the MOSFET above the source. The charge pump operates from input voltages as low as 2.5 V and requires little supply current. The driver controls the gate voltage of the power switch. The driver incorporates circuitry that controls the rise and fall times of the output voltage to limit large current and voltage surges and provides built-in soft-start functionality. The TPS2556-Q1 and TPS2557-Q1 family limits the output current to the programmed current-limit threshold I_{OS} during an overcurrent or short-circuit event by reducing the charge-pump voltage driving the N-channel MOSFET and operating it in the linear range of operation. The result of limiting the output current to I_{OS} reduces the output voltage at OUT by no longer fully enhancing the N-channel MOSFET.

Copyright © 2014, Texas Instruments Incorporated

8.2 Functional Block Diagram

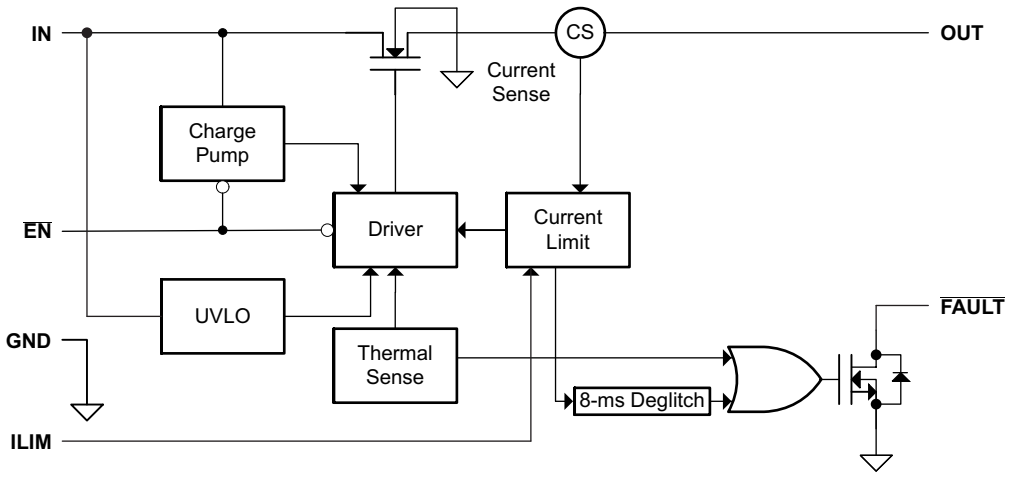

8.3 Feature Description

8.3.1 Overcurrent Conditions

The TPS2556-Q1 and TPS2557-Q1 devices respond to overcurrent conditions by limiting their output current to I_{OS}. On detecting an overcurrent condition, the device maintains a constant output current, and the output voltage reduces accordingly. Two possible overload conditions can occur.

The first condition is when a short circuit or partial short circuit is present on a powered-up and enabled device. With the output voltage held near zero potential with respect to ground, the TPS2556-Q1 or TPS2557-Q1 device ramps the output current to I_{OS}. The TPS2556-Q1 and TPS2557-Q1 devices limit the current to I_{OS} until removal of the overload condition or until the device begins to cycle thermally.

The second condition is when a short circuit, partial short circuit, or transient overload occurs while the device is enabled and powered on. The device responds to the overcurrent condition within time $t_{(IOS)}$ (see Figure 10). Overdriving the current-sense amplifier during this time and momentarily disables the internal N-channel MOSFET. The current-sense amplifier recovers and ramps the output current to I_{OS}. Similar to the previous case, the TPS2556-Q1 and TPS2557-Q1 devices limit the current to I_{OS} until removal of the overload condition or until the device begins to cycle thermally.

The TPS2556-Q1 and TPS2557-Q1 cycle thermally if an overload condition is present long enough to activate thermal limiting in any of the above cases. The device turns off when the junction temperature exceeds 135°C (minimum) while in current limit. The device remains off until the junction temperature cools 20°C (typical) and then restarts. The TPS2556-Q1 and TPS2557-Q1 cycle on and off until removal of the overload (see Figure 21).

8.3.2 $\overline{\text{FAULT}}$ Response

Assertion (active-low) of the $\overline{\text{FAULT}}$ open-drain output occurs during an overcurrent or overtemperature condition. The TPS2556-Q1 and TPS2557-Q1 devices assert the $\overline{\text{FAULT}}$ signal until removal of the fault condition and the resumption of normal device operation. Design of the TPS2556-Q1 and TPS2557-Q1 devices eliminates false $\overline{\text{FAULT}}$ reporting by using an internal delay (9-ms typical) deglitch circuit for overcurrent conditions without the need for external circuitry. This avoids accidental $\overline{\text{FAULT}}$ assertion due to normal operation, such as starting into a heavy capacitive load. The deglitch circuitry delays entering and leaving current-limit-induced fault conditions. Deglitching of the $\overline{\text{FAULT}}$ signal does not occur when an overtemperature condition disables the MOSFET, but does occur after the device has cooled and begins to turn on. This unidirectional deglitch prevents FAULT oscillation during an overtemperature event.

Copyright © 2014, Texas Instruments Incorporated

Feature Description (continued)

8.3.3 Thermal Sense

The TPS2556-Q1 and TPS2557-Q1 devices self-protect by using two independent thermal sensing circuits that monitor the operating temperature of the power switch and disable operation if the temperature exceeds recommended operating conditions. The TPS2556-Q1 and TPS2557-Q1 devices operate in constant-current mode during an overcurrent condition, which increases the voltage drop across power switch. The power dissipation in the package is proportional to the voltage drop across the power switch, which increases the junction temperature during an overcurrent condition. The first thermal sensor (OTSD) turns off the power switch when the die temperature exceeds 135°C (min) and the part is in current limit. Hysteresis is built into the thermal sensor, and the switch turns on after the device has cooled approximately 20°C.

The TPS2556-Q1 and TPS2557-Q1 devices also have a second thermal sensor (OTSD2). This thermal sensor turns off the power switch when the die temperature exceeds 155°C (minimum) regardless of whether the power switch is in current limit, and turns on the power switch after the device has cooled approximately 20°C. The TPS2556-Q1 and TPS2557-Q1 devices continue to cycle off and on until the fault is removed.

8.4 Device Functional Modes

8.4.1 Undervoltage Lockout (UVLO)

The undervoltage lockout (UVLO) circuit disables the power switch until the input voltage reaches the UVLO turnon threshold. Built-in hysteresis prevents unwanted on-and-off cycling due to input voltage droop during turnon.

8.4.2 Enable ($\overline{EN}$ OR EN)

The logic enable controls the power switch and device supply current. The supply current is reduced to less than 2 µA when a logic high is present on $\overline{EN}$ or when a logic low is present on EN. A logic low input on $\overline{EN}$ or a logic high input on EN enables the driver, control circuits, and power switch. The enable input is compatible with both TTL and CMOS logic levels.

8.4.3 Auto-Retry Functionality

Some applications require that an overcurrent condition disable the device momentarily during a fault condition and re-enables it after a preset time. This *auto-retry* functionality can be implemented with an external resistor and capacitor. During a fault condition, $\overline{FAULT}$ pulls EN low. Pulling EN below the turnoff threshold disables the part is disabled, and $\overline{FAULT}$ goes into the high-impedance state, allowing C_{RETRY} to begin charging. The device re-enables when the voltage on EN reaches the turnon threshold. The resistor-capacitor time constant determines the auto-retry time. The device continues to cycle in this manner until removal of the fault condition.

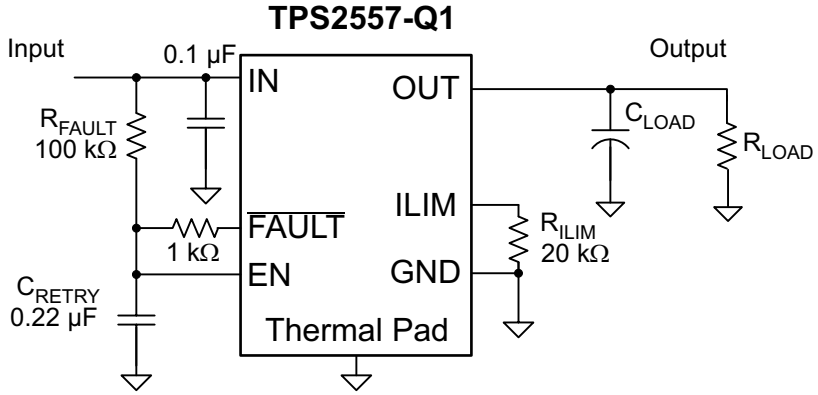

Figure 12. Auto-Retry Functionality

Some applications require auto-retry functionality and the ability to enable and disable with an external logic signal. Figure 13 shows how an external logic signal can drive EN through R_{FAULT} and maintain auto-retry functionality. The resistor-capacitor time constant determines the auto-retry time-out period.

Copyright © 2014, Texas Instruments Incorporated

Device Functional Modes (continued)

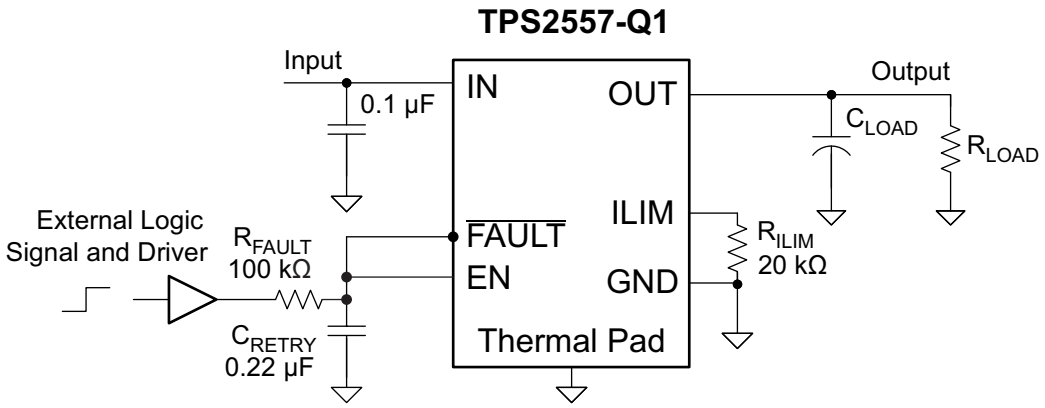

Figure 13. Auto-Retry Functionality With External EN Signal

8.4.4 Two-Level Current-Limit Circuit

Some applications require different current-limit thresholds depending on external system conditions. Figure 14 shows an implementation for an externally controlled, two-level current-limit circuit. The current-limit threshold is set by the total resistance from ILIM to GND (see Programming the Current-Limit Threshold). A logic-level input enables and disables MOSFET Q1 and changes the current-limit threshold by modifying the total resistance from ILIM to GND. One can use additional MOSFET and resistor combinations in parallel with Q1 and R2 to increase the number of additional current-limit levels.

CAUTION

Never drive ILIM directly with an external signal.

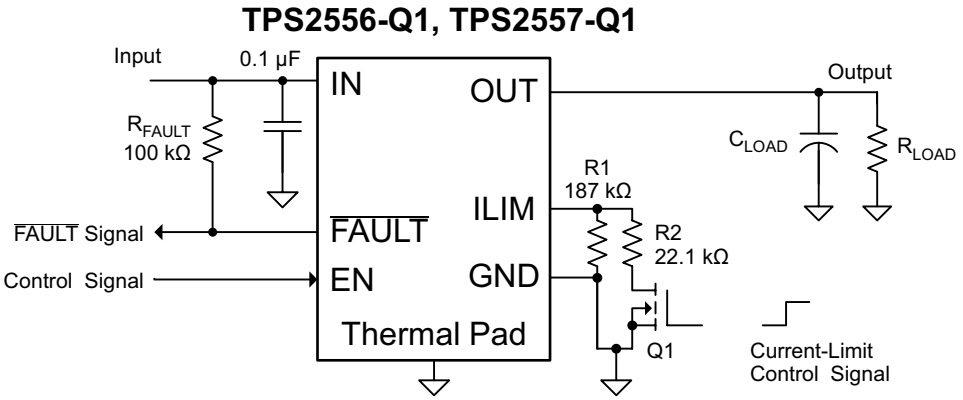

Figure 14. Two-Level Current-Limit Circuit

9 Applications and Implementation

9.1 Application Information

The devices are current-limited, power-distribution switches. They limit the output current to I_{OS} when encountering short circuits or heavy capacitive loads.

9.2 Typical Application, Design for Current Limit

The use of theTPS2556-Q1 and TPS2557-Q1 devices is as a power switch to limit the output current. $\overline{\text{FAULT}}$ is an open drain pulled high to $V_{(IN)}$ with a resistor, a host can use to monitor overcurrent or thermal shutdown.

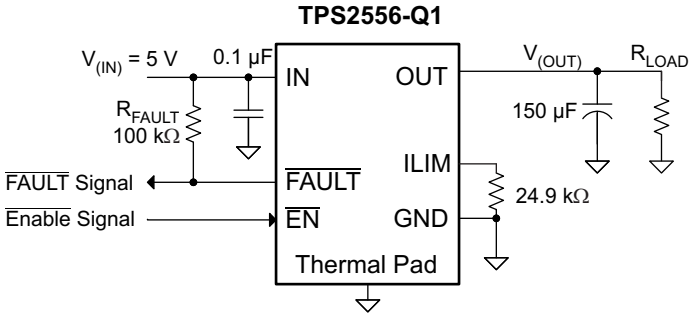

Figure 15. Application Schematic for Current Limit, TPS2556-Q1

9.2.1 Design Requirements

For this design example, use the following as the input parameters.

Table 1. Design Parameters

DESIGN PARAMETER	EXAMPLE VALUE
Input voltage	5 V
Minimum current limit	3 A
Maximum current limit	5 A

9.2.2 Detailed Design Procedure

9.2.2.1 Determine Design Parameters

Beginning the design process requires deciding on a few parameters. The designer must know the following:

- Input voltage
- Minimum current limit
- Maximum current limit

9.2.2.2 Programming the Current-Limit Threshold

The overcurrent threshold is user-programmable via an external resistor. The TPS2556-Q1 and TPS2557-Q1 devices use an internal regulation loop to provide a regulated voltage on the ILIM terminal. The current-limit threshold is proportional to the current sourced out of ILIM. The recommended 1% resistor range for R_{ILIM} is 20 kΩ ≤ $R_{(ILIM)}$ ≤ 187 kΩ to ensure stability of the internal regulation loop. Many applications require that the minimum current limit be above a certain current level or that the maximum current limit be below a certain current level, so it is important to consider the tolerance of the overcurrent threshold when selecting a value for R_{ILIM}. The following equations approximate the resulting overcurrent threshold for a given value of external resistor R_{ILIM}. Consult the Electrical Characteristics table for specific current-limit settings. The traces routing the R_{ILIM} resistor to the TPS2556-Q1 and TPS2557-Q1 devices should be as short as possible to reduce parasitic effects on the current-limit accuracy.

Copyright © 2014, Texas Instruments Incorporated

$$I_{OS(max)}(mA) = \frac{101\,810\ V}{R_{(ILIM)}^{0.9538}\ k\Omega}$$

$$I_{OS(nom)}(mA) = \frac{113\,849\ V}{R_{(ILIM)}^{1.0049}\ k\Omega}$$

$$I_{OS(min)}(mA) = \frac{125\,477\ V}{R_{(ILIM)}^{1.058}\ k\Omega} \quad (1)$$

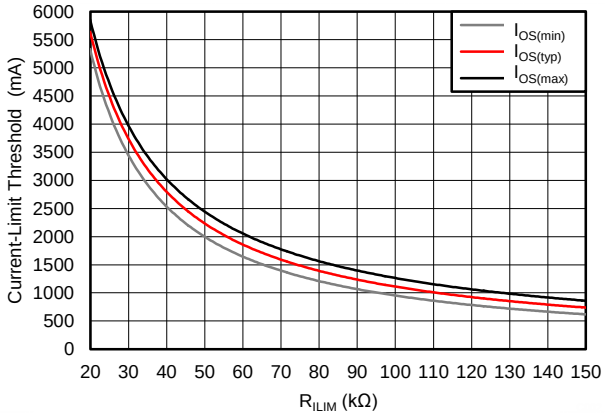

Figure 16. Current-Limit Threshold versus $R_{(ILIM)}$

9.2.2.3 Selecting Current-Limit Resistor 1

Some applications require that current limiting not occur below a certain threshold. For this example, assume that 3 A must be delivered to the load so that the minimum desired current-limit threshold is 3 000 mA. Use the I_{OS} equations and Figure 16 to select $R_{(ILIM)}$.

$$I_{OS(min)}(mA) = 3\,000\ mA$$

$$I_{OS(min)}(mA) = \frac{125\,477\ V}{R_{(ILIM)}^{1.058}\ k\Omega}$$

$$R_{(ILIM)}(k\Omega) = \left(\frac{125\,477\ V}{I_{OS(min)}\ mA}\right)^{\frac{1}{1.058}}$$

$$R_{(ILIM)}(k\Omega) = 34\ k\Omega \quad (2)$$

Select the closest 1% resistor less than the calculated value: $R_{(ILIM)}$ = 33.6 kΩ. This sets the minimum current-limit threshold at 3 000 mA . Use the I_{OS} equations, Figure 16, and the previously calculated value for $R_{(ILIM)}$ to calculate the maximum resulting current-limit threshold.

$$R_{ILIM}(k\Omega) = 33.6\ k\Omega$$

$$I_{OS(max)}(mA) = \frac{101810\ V}{R_{(ILIM)}^{0.9538}\ k\Omega}$$

$$I_{OS(max)}(mA) = \frac{101810\ V}{33.6^{0.9538}\ k\Omega}$$

$$I_{OS(max)}(mA) = 3\,564\ mA \quad (3)$$

The resulting maximum current-limit threshold is 3 564 mA with a 33.6-kΩ resistor.

9.2.2.4 Selecting Current-Limit Resistor 2

Some applications require that current limiting must occur below a certain threshold. For this example, assume that the desired upper current-limit threshold must be below 5,000 mA to protect an upstream power supply. Use the I_{OS} equations and Figure 16 to select $R_{(ILIM)}$.

Copyright © 2014, Texas Instruments Incorporated

$$I_{OS(max)}(mA) = 5\,000\ mA$$

$$I_{OS(max)}(mA) = \frac{101\,810\ V}{R_{(ILIM)}^{0.9538}\ k\Omega}$$

$$R_{(ILIM)}(k\Omega) = \left(\frac{101\,810\ V}{I_{OS(max)}\ mA}\right)^{\frac{1}{0.9538}}$$

$$R_{(ILIM)}(k\Omega) = 23.6\ k\Omega \quad (4)$$

Select the closest 1% resistor greater than the calculated value: $R_{(ILIM)}$ = 23.7 kΩ. This sets the maximum current-limit threshold at 5 000 mA . Use the I_{OS} equations, Figure 16, and the previously calculated value for R_{ILIM} to calculate the minimum resulting current-limit threshold.

$$R_{(ILIM)}(k\Omega) = 23.7\ k\Omega$$

$$I_{OS(min)}(mA) = \frac{125\,477\ V}{R_{(ILIM)}^{1.058}}$$

$$I_{OS(min)}(mA) = \frac{125\,477\ V}{23.7^{1.058}}$$

$$I_{OS(min)}(mA) = 4\,406\ mA \quad (5)$$

The resulting minimum current-limit threshold is 4 406 mA with a 23.7-kΩ resistor.

9.2.2.5 Accounting for Resistor Tolerance

The previous sections described the selection of R_{ILIM} given certain application requirements and the importance of understanding the current-limit threshold tolerance. The analysis focused only on the TPS2556-Q1 and TPS2557-Q1 device performance and assumed an exact resistor value. However, resistors sold in quantity are not exact and are bounded by an upper and lower tolerance centered around a nominal resistance. The additional R_{ILIM} resistance tolerance directly affects the current-limit threshold accuracy at a system level. The following table shows a process that accounts for worst-case resistor tolerance assuming 1% resistor values. Step one follows the selection process outlined in the foregoing application examples. Step two determines the upper and lower resistance bounds of the selected resistor. Step three uses the upper and lower resistor bounds in the I_{OS} equations to calculate the threshold limits. It is important to use tighter tolerance resistors, for example 0.5% or 0.1%, when precision current limiting is desirable.

Copyright © 2014, Texas Instruments Incorporated

Table 2. Common R_{ILIM} Resistor Selections

Desired Nominal Current Limit (mA)	Ideal Resistor (kΩ)	Closest 1% Resistor (kΩ)	Resistor Tolerance		Actual Limits		
			1% low (kΩ)	1% high (kΩ)	I_{OS} MIN (mA)	I_{OS} NOM (mA)	I_{OS} MAX (mA)
750	148.1	147	145.5	148.5	632	756	881
1000	111.3	110	108.9	111.1	859	1011	1161
1250	89.1	88.7	87.8	89.6	1079	1256	1426
1500	74.3	75	74.3	75.8	1289	1486	1673
1750	63.7	63.4	62.8	64.0	1540	1760	1964
2000	55.8	56.2	55.6	56.8	1749	1986	2203
2250	49.6	49.9	49.4	50.4	1983	2238	2468
2500	44.7	44.2	43.8	44.6	2255	2528	2770
2750	40.7	40.2	39.8	40.6	2493	2781	3033
3000	37.3	37.4	37.0	37.8	2691	2991	3249
3250	34.4	34.8	34.5	35.1	2904	3215	3480
3500	32.0	31.6	31.3	31.9	3216	3542	3816
3750	29.9	30.1	29.8	30.4	3386	3720	3997
4000	28.0	28	27.7	28.3	3655	4000	4282
4250	26.4	26.1	25.8	26.4	3937	4293	4579
4500	24.9	24.9	24.7	25.1	4138	4501	4789
4750	23.6	23.7	23.5	23.9	4360	4730	5020
5000	22.4	22.6	22.4	22.8	4585	4961	5253
5250	21.4	21.5	21.3	21.7	4834	5216	5509
5500	20.4	20.5	20.3	20.7	5083	5472	5765

9.2.2.6 Power Dissipation and Junction Temperature

The low on-resistance of the N-channel MOSFET allows small surface-mount packages to pass large currents. It is good design practice to estimate power dissipation and junction temperature. The following analysis gives an approximation for calculating junction temperature based on the power dissipation in the package. However, it is important to note that thermal analysis is strongly dependent on additional system-level factors. Such factors include air flow, board layout, copper thickness and surface area, and proximity to other devices that dissipate power. Good thermal design practice must include all system-level factors in addition to individual component analysis.

Begin by determining the $r_{DS(on)}$ of the N-channel MOSFET relative to the input voltage and operating temperature. As an initial estimate, use the highest operating ambient temperature of interest and read $r_{DS(on)}$ from the typical characteristics graph. Using this value, calculate the power dissipation by:

$$P_D = r_{DS(on)} \times I_{OUT}^{\ 2}$$

where:

P_D = Total power dissipation (W)

$r_{DS(on)}$ = Power-switch on-resistance (Ω)

$I_{(OUT)}$ = Maximum current-limit threshold (A)

This step calculates the total power dissipation of the N-channel MOSFET.

Finally, calculate the junction temperature:

$$T_J = P_D \times R_{\theta JA} + T_A$$

where:

T_A = Ambient temperature (°C)

$R_{\theta JA}$ = Thermal resistance (°C/W)

P_D = Total power dissipation (W)

Copyright © 2014, Texas Instruments Incorporated

Compare the calculated junction temperature with the initial estimate. If they are not within a few degrees, repeat the calculation using the *refined* $r_{DS(on)}$ from the previous calculation as the new estimate. Two or three iterations are generally sufficient to achieve the desired result. The final junction temperature is highly dependent on thermal resistance $R_{\theta JA}$, and thermal resistance is highly dependent on the individual package and board layout. The Thermal Information Table lists thermal resistances of the device that one can use to help calculate the thermal performance of the board design.

9.2.3 Application Curves

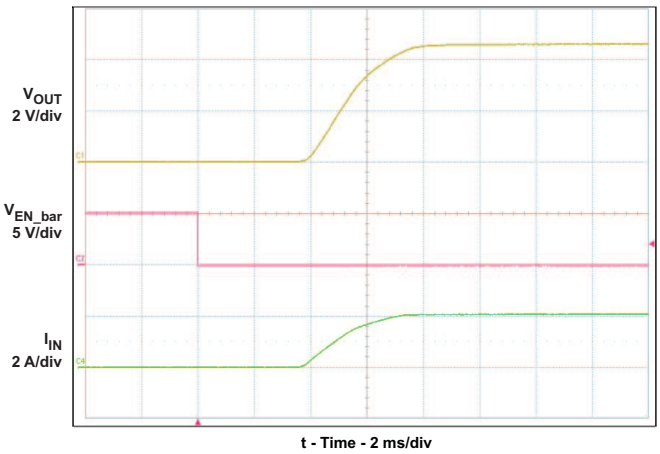

Figure 17. Turnon Delay and Rise Time

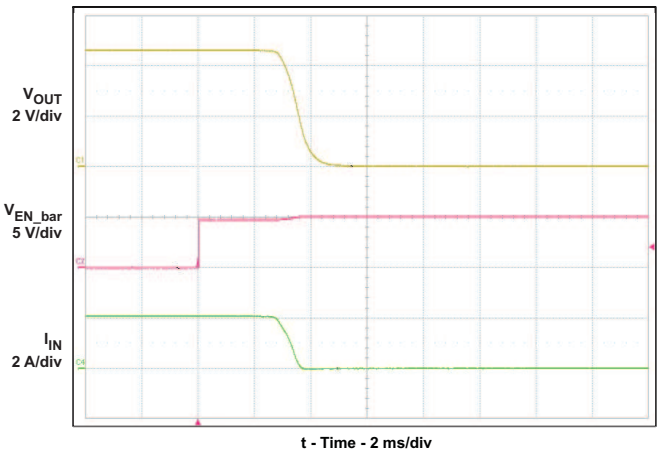

Figure 18. Turnoff Delay and Fall Time

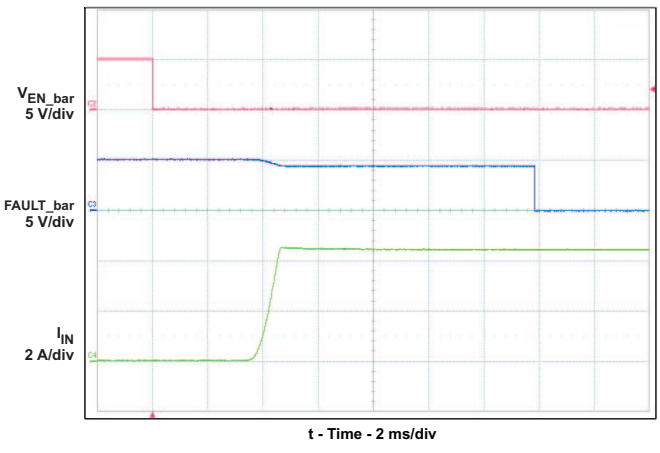

Figure 19. Device Enabled Into Short Circuit

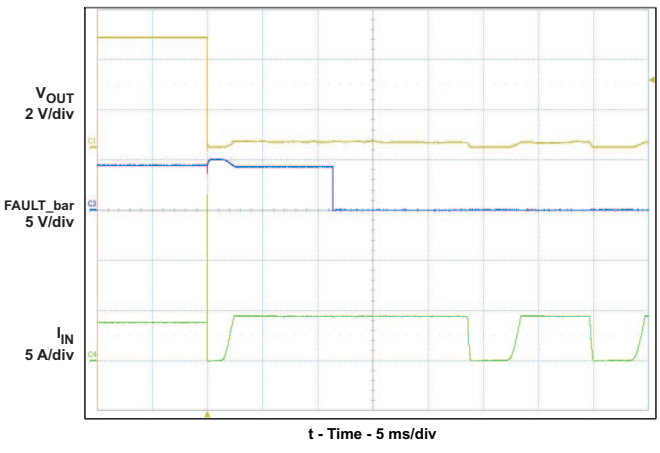

Figure 20. Full-Load to Short-Circuit Transient Response

Copyright © 2014, Texas Instruments Incorporated

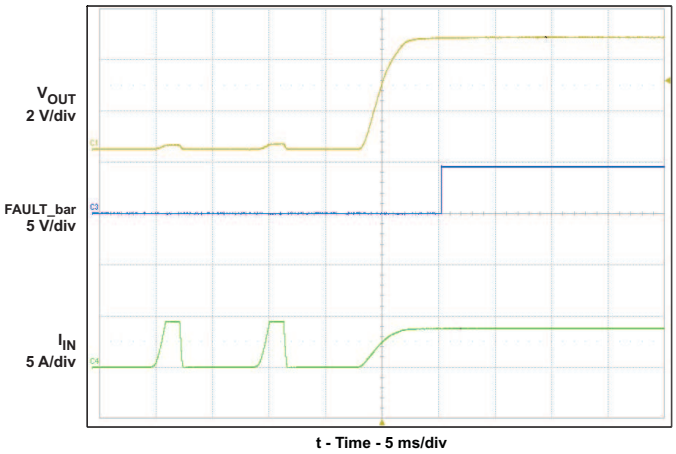

Figure 21. Short-Circuit to Full-Load Recovery Response

10 Power Supply Recommendations

Design of the devices is for operation from an input voltage supply range of 2.5 V to 6.5 V. The current capability of the power supply should exceed the maximum current limit of the power switch.

11 Layout

11.1 Layout Guidelines

- For all applications, TI recommends a 0.1-µF or greater ceramic bypass capacitor between IN and GND as close to the device as possible for local noise decoupling. This precaution reduces ringing on the input due to power-supply transients. The application may require additional input capacitance on the input to prevent voltage overshoot from exceeding the absolute-maximum voltage of the device during heavy transient conditions.
- Output capacitance is not required, but TI recommends placing a high-value electrolytic capacitor on the output pin when there is an expectation of large transient currents on the output.
- The traces routing the R_{ILIM} resistor to the device should be as short as possible to reduce parasitic effects on the current limit accuracy.
- Connect the thermal pad directly to PCB ground plane using wide and short copper trace.

11.2 Layout Example

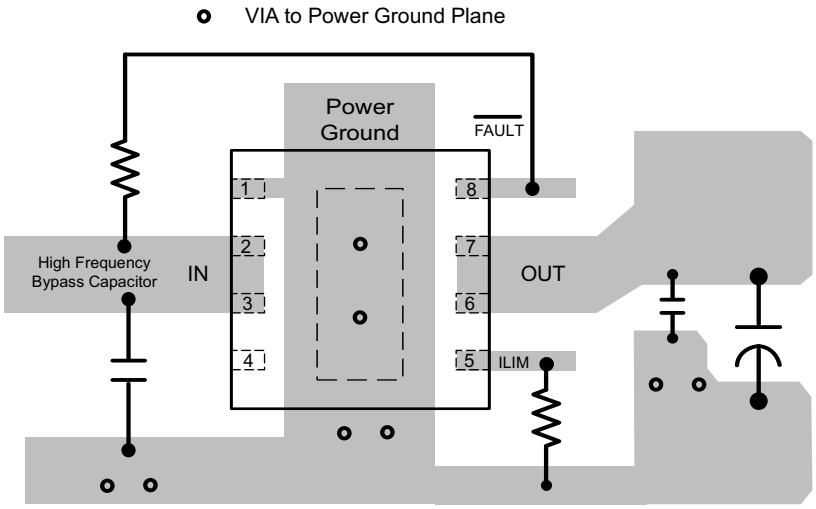

Figure 22. TPS2556-Q1 and TPS2557-Q1 Board Layout

Copyright © 2014, Texas Instruments Incorporated

12 Device and Documentation Support

12.1 Related Links

The following table lists quick access links. Categories include technical documents, support and community resources, tools and software, and quick access to sample or buy.

Table 3. Related Links

PARTS	PRODUCT FOLDER	SAMPLE & BUY	TECHNICAL DOCUMENTS	TOOLS & SOFTWARE	SUPPORT & COMMUNITY
TPS2556-Q1	Click here	Click here	Click here	Click here	Click here
TPS2557-Q1	Click here	Click here	Click here	Click here	Click here

12.2 Trademarks

All trademarks are the property of their respective owners.

12.3 Electrostatic Discharge Caution



This integrated circuit can be damaged by ESD. Texas Instruments recommends that all integrated circuits be handled with appropriate precautions. Failure to observe proper handling and installation procedures can cause damage.

ESD damage can range from subtle performance degradation to complete device failure. Precision integrated circuits may be more susceptible to damage because very small parametric changes could cause the device not to meet its published specifications.

12.4 Glossary

SLYZ022 — *TI Glossary*.

This glossary lists and explains terms, acronyms, and definitions.

13 Mechanical, Packaging, and Orderable Information

The following packaging information and addendum reflect the most-current data available for the designated devices. This data is subject to change without notice and without revision of this document.

Copyright © 2014, Texas Instruments Incorporated

PACKAGING INFORMATION

Orderable Device	Status (1)	Package Type	Package Drawing	Pins	Package Qty	Eco Plan (2)	Lead/Ball Finish (6)	MSL Peak Temp (3)	Op Temp (°C)	Device Marking (4/5)	Samples
TPS2556QDRBRQ1	ACTIVE	SON	DRB	8	3000	Green (RoHS & no Sb/Br)	CU NIPDAU	Level-2-260C-1 YEAR		2556Q	Samples
TPS2556QDRBTQ1	ACTIVE	SON	DRB	8	250	Green (RoHS & no Sb/Br)	CU NIPDAU	Level-2-260C-1 YEAR		2556Q	Samples
TPS2557QDRBRQ1	ACTIVE	SON	DRB	8	3000	Green (RoHS & no Sb/Br)	CU NIPDAU	Level-2-260C-1 YEAR	-40 to 125	2557Q	Samples
TPS2557QDRBTQ1	ACTIVE	SON	DRB	8	250	Green (RoHS & no Sb/Br)	CU NIPDAU	Level-2-260C-1 YEAR	-40 to 125	2557Q	Samples

(1) The marketing status values are defined as follows:
ACTIVE: Product device recommended for new designs.
LIFEBUY: TI has announced that the device will be discontinued, and a lifetime-buy period is in effect.
NRND: Not recommended for new designs. Device is in production to support existing customers, but TI does not recommend using this part in a new design.
PREVIEW: Device has been announced but is not in production. Samples may or may not be available.
OBSOLETE: TI has discontinued the production of the device.

(2) Eco Plan - The planned eco-friendly classification: Pb-Free (RoHS), Pb-Free (RoHS Exempt), or Green (RoHS & no Sb/Br) - please check http://www.ti.com/productcontent for the latest availability information and additional product content details.
TBD: The Pb-Free/Green conversion plan has not been defined.
Pb-Free (RoHS): TI's terms "Lead-Free" or "Pb-Free" mean semiconductor products that are compatible with the current RoHS requirements for all 6 substances, including the requirement that lead not exceed 0.1% by weight in homogeneous materials. Where designed to be soldered at high temperatures, TI Pb-Free products are suitable for use in specified lead-free processes.
Pb-Free (RoHS Exempt): This component has a RoHS exemption for either 1) lead-based flip-chip solder bumps used between the die and package, or 2) lead-based die adhesive used between the die and leadframe. The component is otherwise considered Pb-Free (RoHS compatible) as defined above.
Green (RoHS & no Sb/Br): TI defines "Green" to mean Pb-Free (RoHS compatible), and free of Bromine (Br) and Antimony (Sb) based flame retardants (Br or Sb do not exceed 0.1% by weight in homogeneous material)

(3) MSL, Peak Temp. - The Moisture Sensitivity Level rating according to the JEDEC industry standard classifications, and peak solder temperature.

(4) There may be additional marking, which relates to the logo, the lot trace code information, or the environmental category on the device.

(5) Multiple Device Markings will be inside parentheses. Only one Device Marking contained in parentheses and separated by a "~" will appear on a device. If a line is indented then it is a continuation of the previous line and the two combined represent the entire Device Marking for that device.

(6) Lead/Ball Finish - Orderable Devices may have multiple material finish options. Finish options are separated by a vertical ruled line. Lead/Ball Finish values may wrap to two lines if the finish value exceeds the maximum column width.

Important Information and Disclaimer: The information provided on this page represents TI's knowledge and belief as of the date that it is provided. TI bases its knowledge and belief on information provided by third parties, and makes no representation or warranty as to the accuracy of such information. Efforts are underway to better integrate information from third parties. TI has taken and continues to take reasonable steps to provide representative and accurate information but may not have conducted destructive testing or chemical analysis on incoming materials and chemicals. TI and TI suppliers consider certain information to be proprietary, and thus CAS numbers and other limited information may not be available for release.

In no event shall TI's liability arising out of such information exceed the total purchase price of the TI part(s) at issue in this document sold by TI to Customer on an annual basis.

OTHER QUALIFIED VERSIONS OF TPS2556-Q1, TPS2557-Q1 :

- Catalog: TPS2556, TPS2557

NOTE: Qualified Version Definitions:

- Catalog - TI's standard catalog product

TAPE AND REEL INFORMATION

REEL DIMENSIONS

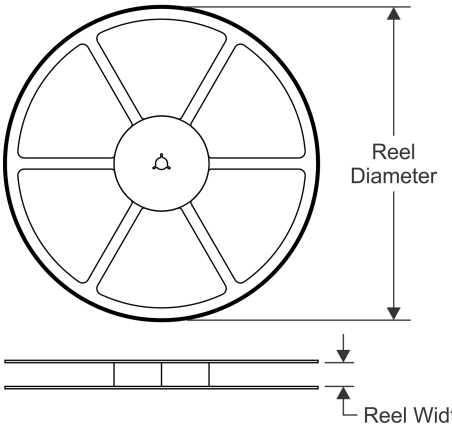

TAPE DIMENSIONS

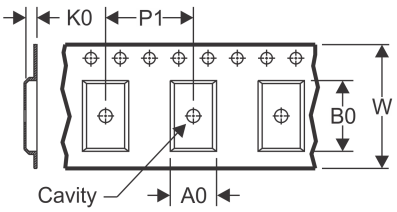

A0	Dimension designed to accommodate the component width
B0	Dimension designed to accommodate the component length
K0	Dimension designed to accommodate the component thickness
W	Overall width of the carrier tape
P1	Pitch between successive cavity centers

QUADRANT ASSIGNMENTS FOR PIN 1 ORIENTATION IN TAPE

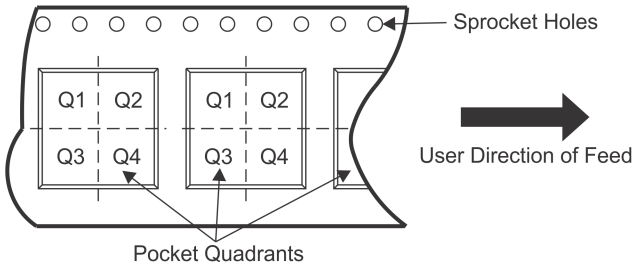

*All dimensions are nominal

Device	Package Type	Package Drawing	Pins	SPQ	Reel Diameter (mm)	Reel Width W1 (mm)	A0 (mm)	B0 (mm)	K0 (mm)	P1 (mm)	W (mm)	Pin1 Quadrant
TPS2556QDRBRQ1	SON	DRB	8	3000	330.0	12.4	3.3	3.3	1.1	8.0	12.0	Q2
TPS2556QDRBTQ1	SON	DRB	8	250	180.0	12.4	3.3	3.3	1.1	8.0	12.0	Q2
TPS2557QDRBRQ1	SON	DRB	8	3000	330.0	12.4	3.3	3.3	1.1	8.0	12.0	Q2
TPS2557QDRBTQ1	SON	DRB	8	250	180.0	12.4	3.3	3.3	1.1	8.0	12.0	Q2

TAPE AND REEL BOX DIMENSIONS

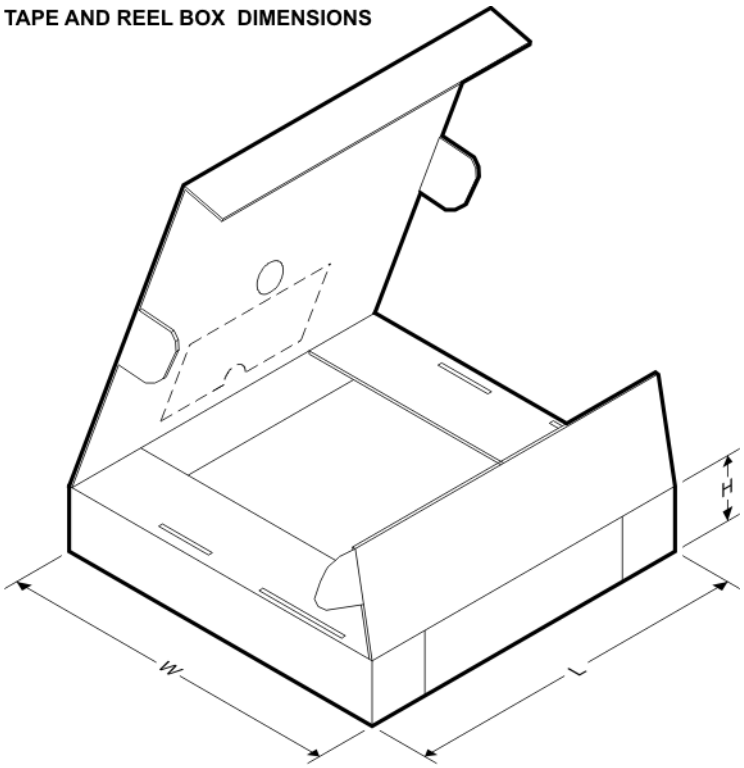

*All dimensions are nominal

Device	Package Type	Package Drawing	Pins	SPQ	Length (mm)	Width (mm)	Height (mm)
TPS2556QDRBRQ1	SON	DRB	8	3000	367.0	367.0	35.0
TPS2556QDRBTQ1	SON	DRB	8	250	210.0	185.0	35.0
TPS2557QDRBRQ1	SON	DRB	8	3000	367.0	367.0	35.0
TPS2557QDRBTQ1	SON	DRB	8	250	210.0	185.0	35.0

DRB (S–PVSON–N8) PLASTIC SMALL OUTLINE NO–LEAD

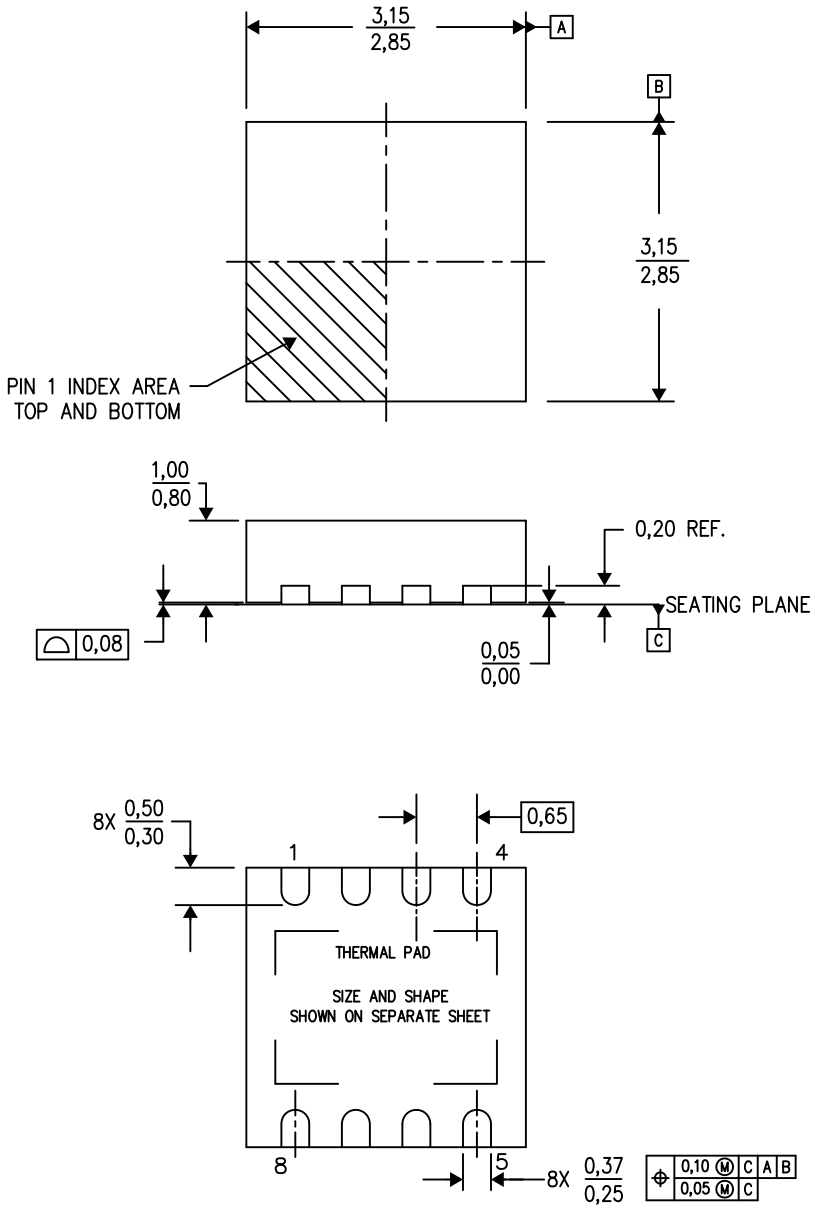

4203482–2/K 06/12

NOTES:
A. All linear dimensions are in millimeters. Dimensioning and tolerancing per ASME Y14.5M–1994.
B. This drawing is subject to change without notice.
C. Small Outline No–Lead (SON) package configuration.
D. The package thermal pad must be soldered to the board for thermal and mechanical performance.
E. See the additional figure in the Product Data Sheet for details regarding the exposed thermal pad features and dimensions.

DRB (S–PVSON–N8) PLASTIC SMALL OUTLINE NO–LEAD

THERMAL INFORMATION

This package incorporates an exposed thermal pad that is designed to be attached directly to an external heatsink. The thermal pad must be soldered directly to the printed circuit board (PCB). After soldering, the PCB can be used as a heatsink. In addition, through the use of thermal vias, the thermal pad can be attached directly to the appropriate copper plane shown in the electrical schematic for the device, or alternatively, can be attached to a special heatsink structure designed into the PCB. This design optimizes the heat transfer from the integrated circuit (IC).

For information on the Quad Flatpack No–Lead (QFN) package and its advantages, refer to Application Report, QFN/SON PCB Attachment, Texas Instruments Literature No. SLUA271. This document is available at www.ti.com.

The exposed thermal pad dimensions for this package are shown in the following illustration.

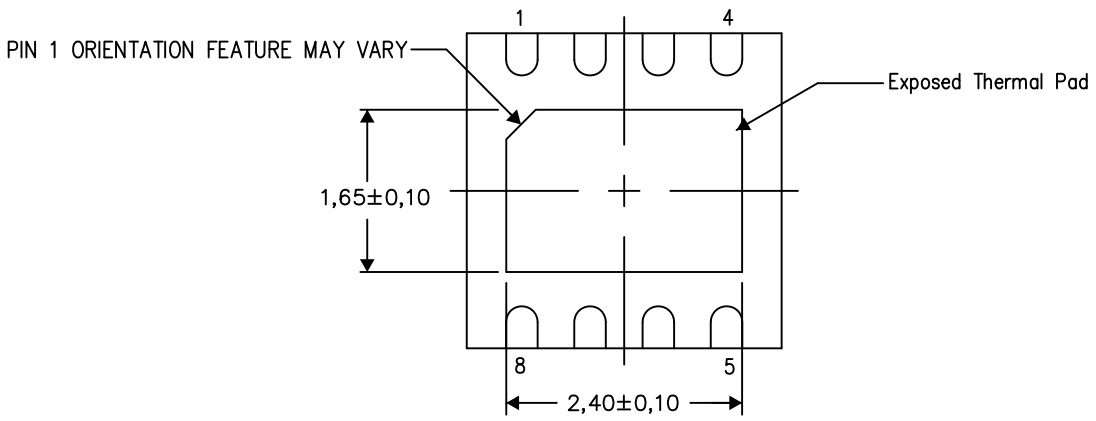

Bottom View

Exposed Thermal Pad Dimensions

4206340–3/P 07/14

NOTE: All linear dimensions are in millimeters

DRB (S–PVSON–N8) PLASTIC SMALL OUTLINE NO–LEAD

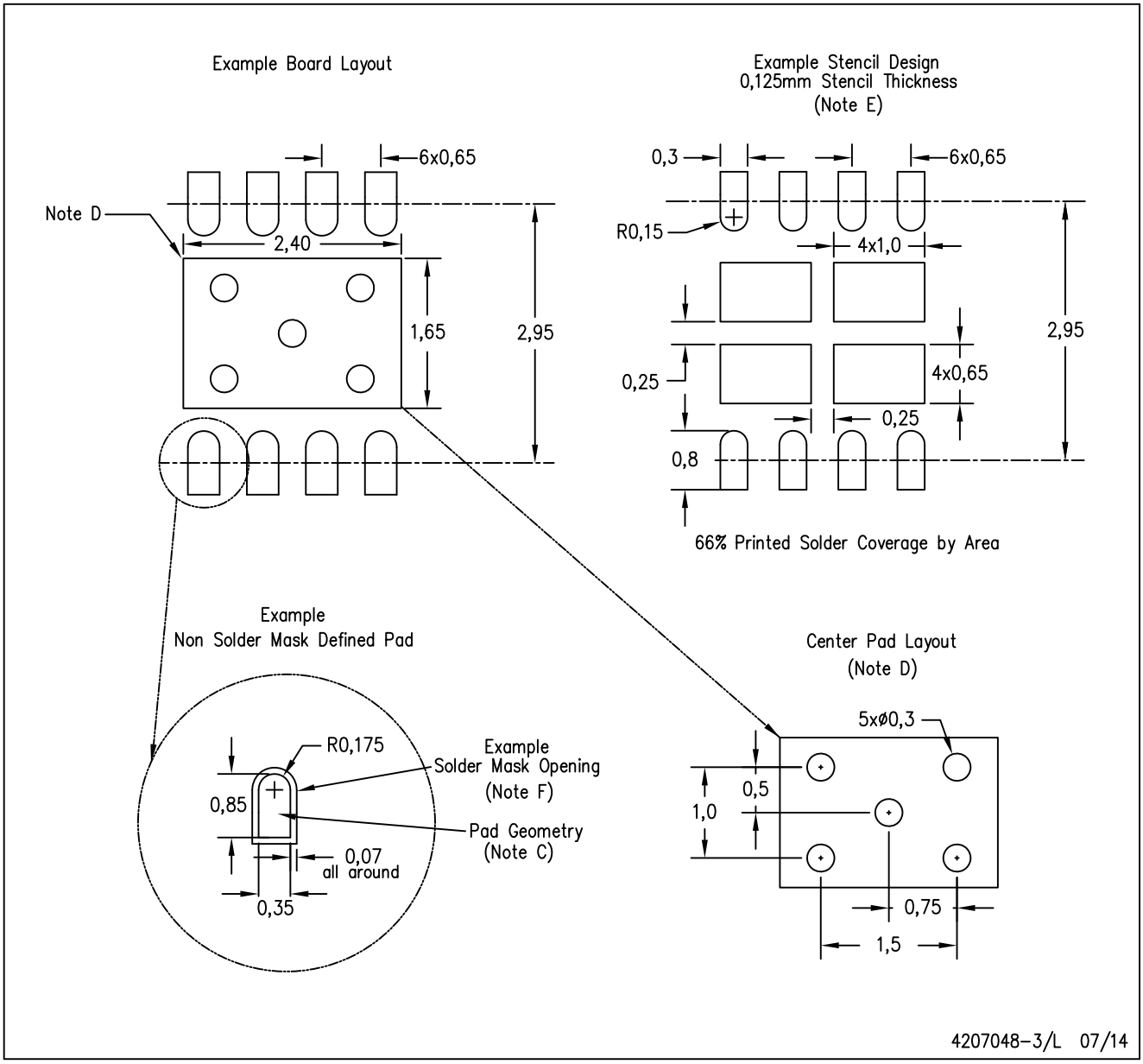

NOTES:
A. All linear dimensions are in millimeters.
B. This drawing is subject to change without notice.
C. Publication IPC–7351 is recommended for alternate designs.
D. This package is designed to be soldered to a thermal pad on the board. Refer to Application Note, QFN Packages, Texas Instruments Literature No. SLUA271, and also the Product Data Sheets for specific thermal information, via requirements, and recommended board layout. These documents are available at www.ti.com <http://www.ti.com>.
E. Laser cutting apertures with trapezoidal walls and also rounding corners will offer better paste release. Customers should contact their board assembly site for stencil design recommendations. Refer to IPC 7525 for stencil design considerations.
F. Customers should contact their board fabrication site for solder mask tolerances.

IMPORTANT NOTICE

Texas Instruments Incorporated and its subsidiaries (TI) reserve the right to make corrections, enhancements, improvements and other changes to its semiconductor products and services per JESD46, latest issue, and to discontinue any product or service per JESD48, latest issue. Buyers should obtain the latest relevant information before placing orders and should verify that such information is current and complete. All semiconductor products (also referred to herein as “components”) are sold subject to TI’s terms and conditions of sale supplied at the time of order acknowledgment.

TI warrants performance of its components to the specifications applicable at the time of sale, in accordance with the warranty in TI’s terms and conditions of sale of semiconductor products. Testing and other quality control techniques are used to the extent TI deems necessary to support this warranty. Except where mandated by applicable law, testing of all parameters of each component is not necessarily performed.

TI assumes no liability for applications assistance or the design of Buyers’ products. Buyers are responsible for their products and applications using TI components. To minimize the risks associated with Buyers’ products and applications, Buyers should provide adequate design and operating safeguards.

TI does not warrant or represent that any license, either express or implied, is granted under any patent right, copyright, mask work right, or other intellectual property right relating to any combination, machine, or process in which TI components or services are used. Information published by TI regarding third-party products or services does not constitute a license to use such products or services or a warranty or endorsement thereof. Use of such information may require a license from a third party under the patents or other intellectual property of the third party, or a license from TI under the patents or other intellectual property of TI.

Reproduction of significant portions of TI information in TI data books or data sheets is permissible only if reproduction is without alteration and is accompanied by all associated warranties, conditions, limitations, and notices. TI is not responsible or liable for such altered documentation. Information of third parties may be subject to additional restrictions.

Resale of TI components or services with statements different from or beyond the parameters stated by TI for that component or service voids all express and any implied warranties for the associated TI component or service and is an unfair and deceptive business practice. TI is not responsible or liable for any such statements.

Buyer acknowledges and agrees that it is solely responsible for compliance with all legal, regulatory and safety-related requirements concerning its products, and any use of TI components in its applications, notwithstanding any applications-related information or support that may be provided by TI. Buyer represents and agrees that it has all the necessary expertise to create and implement safeguards which anticipate dangerous consequences of failures, monitor failures and their consequences, lessen the likelihood of failures that might cause harm and take appropriate remedial actions. Buyer will fully indemnify TI and its representatives against any damages arising out of the use of any TI components in safety-critical applications.

In some cases, TI components may be promoted specifically to facilitate safety-related applications. With such components, TI’s goal is to help enable customers to design and create their own end-product solutions that meet applicable functional safety standards and requirements. Nonetheless, such components are subject to these terms.

No TI components are authorized for use in FDA Class III (or similar life-critical medical equipment) unless authorized officers of the parties have executed a special agreement specifically governing such use.

Only those TI components which TI has specifically designated as military grade or “enhanced plastic” are designed and intended for use in military/aerospace applications or environments. Buyer acknowledges and agrees that any military or aerospace use of TI components which have ***not*** been so designated is solely at the Buyer's risk, and that Buyer is solely responsible for compliance with all legal and regulatory requirements in connection with such use.

TI has specifically designated certain components as meeting ISO/TS16949 requirements, mainly for automotive use. In any case of use of non-designated products, TI will not be responsible for any failure to meet ISO/TS16949.

Products		**Applications**	
Audio	www.ti.com/audio	Automotive and Transportation	www.ti.com/automotive
Amplifiers	amplifier.ti.com	Communications and Telecom	www.ti.com/communications
Data Converters	dataconverter.ti.com	Computers and Peripherals	www.ti.com/computers
DLP® Products	www.dlp.com	Consumer Electronics	www.ti.com/consumer-apps
DSP	dsp.ti.com	Energy and Lighting	www.ti.com/energy
Clocks and Timers	www.ti.com/clocks	Industrial	www.ti.com/industrial
Interface	interface.ti.com	Medical	www.ti.com/medical
Logic	logic.ti.com	Security	www.ti.com/security
Power Mgmt	power.ti.com	Space, Avionics and Defense	www.ti.com/space-avionics-defense
Microcontrollers	microcontroller.ti.com	Video and Imaging	www.ti.com/video
RFID	www.ti-rfid.com		
OMAP Applications Processors	www.ti.com/omap	**TI E2E Community**	e2e.ti.com
Wireless Connectivity	www.ti.com/wirelessconnectivity		

Mailing Address: Texas Instruments, Post Office Box 655303, Dallas, Texas 75265
Copyright © 2015, Texas Instruments Incorporated