TPS2554 and TPS2555 Evaluation Module

This user's guide describes the evaluation module (EVM) for the TPS2554 and TPS2555. TPS2554 and TPS2555 are precision-adjustable, current-limited, power-distribution switches. The document contains an operational description of the EVM, schematic, board layout, and bill of materials.

Contents

1 Description 2
1.1 Features 2
1.2 Applications 2
2 Schematic 3
3 General Configuration and Description 4
3.1 Physical Access 4
3.2 Current-Limit Setpoint 4
3.3 Test Setup 4
4 EVM Assembly Drawings and Layout Guidelines 5
4.1 Layout Guidelines 5
4.2 PCB Drawings 5
5 Bill of Materials 8

List of Figures

1 TPS2554/5EVM Schematic 3
2 Typical TPS2554/5EVM Test Setup 5
3 Top-Side Placement and Routing 6
4 Layer-Two Routing 6
5 Layer-Three Routing 7
6 Bottom-Side Placement and Routing 7

List of Tables

1 User Interface 4
2 Test Points 4
3 EVM Bill of Materials 8

Copyright © 2011, Texas Instruments Incorporated

1 Description

The TPS2554EVM-010 evaluation module allows reference circuit evaluation of the Texas Instruments TPS2554 and TPS2555 power-distribution switches.

1.1 Features

- Precision adjustable, current-limited, power-distribution switch
- Fast overcurrent response – 1 µs typical
- 80-mΩ, high-side MOSFET
- Operating range: 4.5 V to 5.5 V

1.2 Applications

- USB ports/hubs
- Notebook personal computers (PC)

Copyright © 2011, Texas Instruments Incorporated

2 Schematic

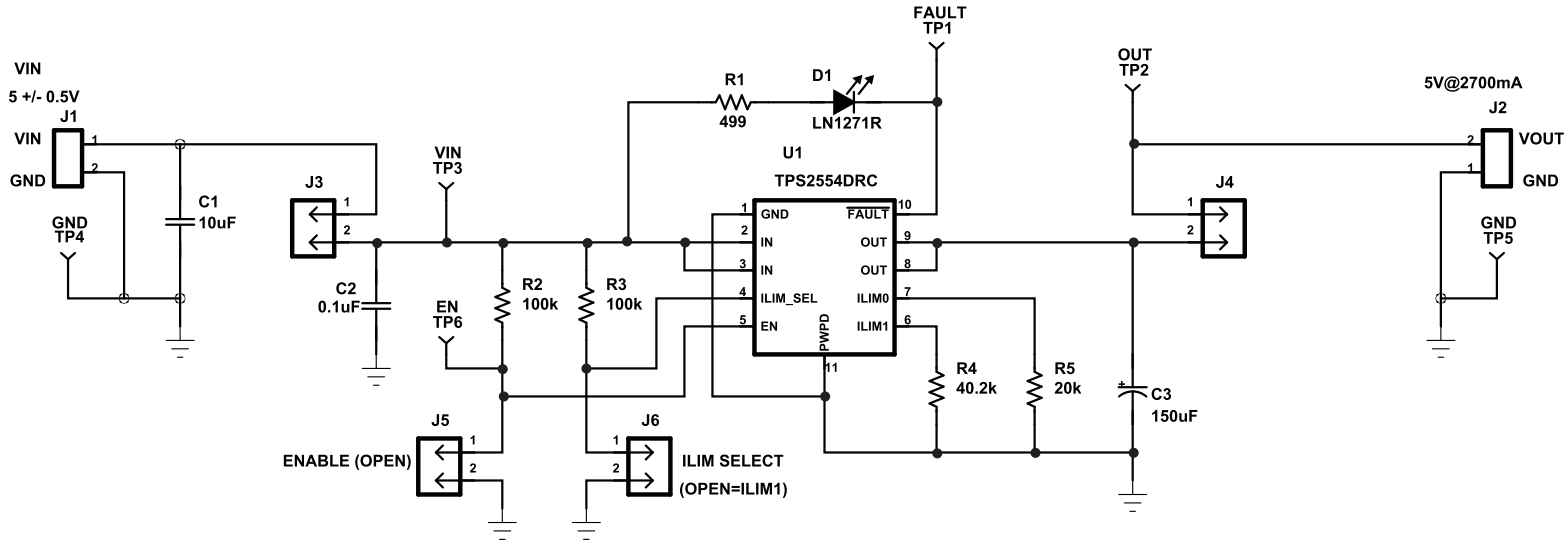

Figure 1. TPS2554/5EVM Schematic

Copyright © 2011, Texas Instruments Incorporated

3 General Configuration and Description

3.1 Physical Access

Table 1 lists the TPS2554/5EVM connector functionality, and Table 2 describes the test point availability.

Table 1. User Interface

Connector	Label	Description
J1	VIN	Input connector
J2	VOUT	Output connector
J3	J3	Input voltage jumper. Shunt can be removed to measure input current.
J4	J4	Output voltage jumper. Shunt can be removed to measure output current.
J5	EN	Enable jumper. Leave open to enable TPS2554 and install shunt to enable TPS2555.
J6	ILIM_SEL	Current limit select. Install shunt to select ILIM0 (2.4 A nominal), and remove shunt to select ILIM1 (1.2 A nominal).
D1 (RED)	FLT	Fault LED

Table 2. Test Points

Test Point	Color	Label	Description
TP3	RED	IN	Power switch input (IC side of J3 shunt)
TP4	BLK	GND	Power switch input ground
TP1	WHT	FLT	Fault pin output
TP2	RED	VOUT	Power switch output
TP5	BLK	GND	Power switch output ground
TP6	WHT	EN	Enable pin input

3.2 Current-Limit Setpoint

R4 and R5 configure the current-limit setpoint for ILIM0 and ILIM1, respectively (see J6 in Table 1). ILIM0 or ILIM1 setpoint can be adjusted using the following example by substituting R4 or R5 for R_{ILIMx}. In this example IOS = 2 A.

The following example is an approximation only and does not take into account the resistor tolerance or the variation of ILIM. For exact variation of ILIM, see the TPS2554/TPS2555 data sheet, SLVSAM0.

$IOS = 48000 / R_{ILIMx} = 2\ A$

$R_{ILIMx} = 48000 / IOS = 48000 / 2 = 24000\ \Omega$

Choose $R_{ILIMx} = 23.7\ k\Omega$

$IOS = 48000 / 23700 = 2.03\ A$

3.3 Test Setup

Figure 2 shows a typical test setup for TPS2554/5EVM.

Copyright © 2011, Texas Instruments Incorporated

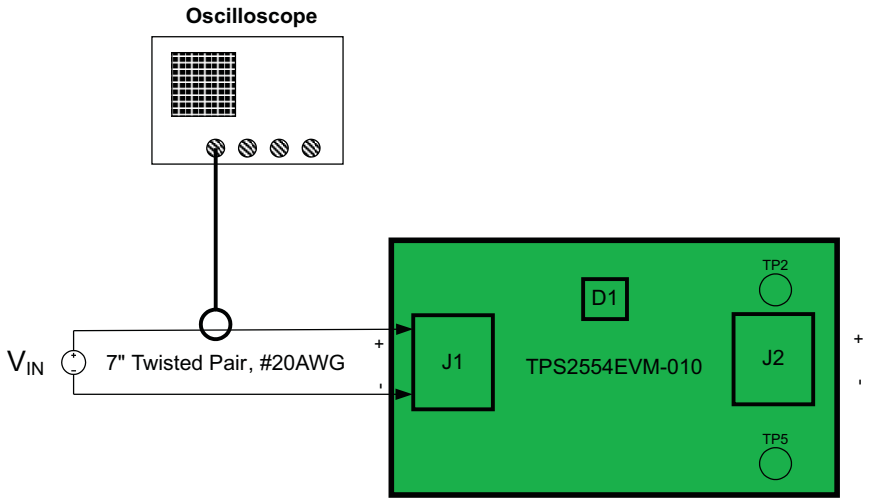

Figure 2. Typical TPS2554/5EVM Test Setup

4 EVM Assembly Drawings and Layout Guidelines

4.1 Layout Guidelines

- **TPS2554/55 placement:** Place the TPS2554/55 near the USB output connector and the 150-µF OUT pin filter capacitor. Connect the exposed pad to the GND pin and the system ground plane using a via array.
- **IN pin bypass capacitance:** Place the 100-nF bypass capacitor near the IN and GND pins, and make the connection using a low-inductance trace.
- **ILIM0 and ILIM1 pin connections:** Current-limit accuracy can be compromised by stray current leakage from a higher voltage source to the ILIM0 or ILIM1 pins. Ensure that adequate spacing exists between IN pin copper/trace and ILIM0 pin trace to prevent contaminate buildup during the PCB assembly process. If a low-current-limit setpoint is required (R_{ILIMx} > 200 kΩ), use ILIM1 for this case, as it is further away from the IN pin.

4.2 PCB Drawings

The Figure 3 through Figure 6 show component placement and layout of the EVM.

Copyright © 2011, Texas Instruments Incorporated

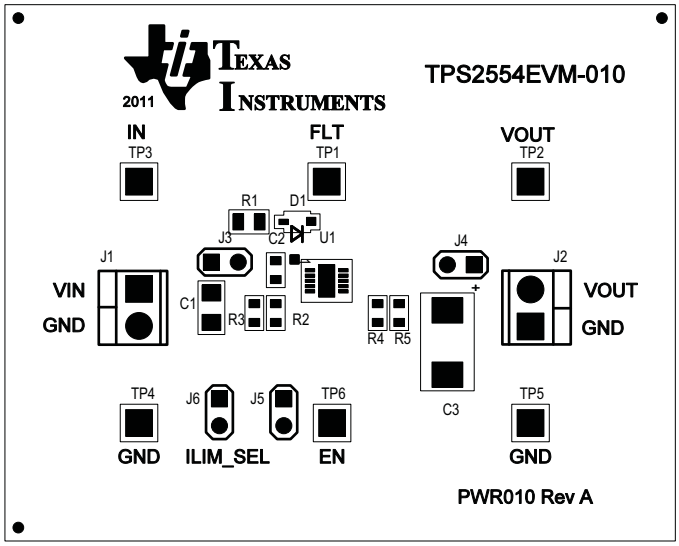

Figure 3. Top-Side Placement and Routing

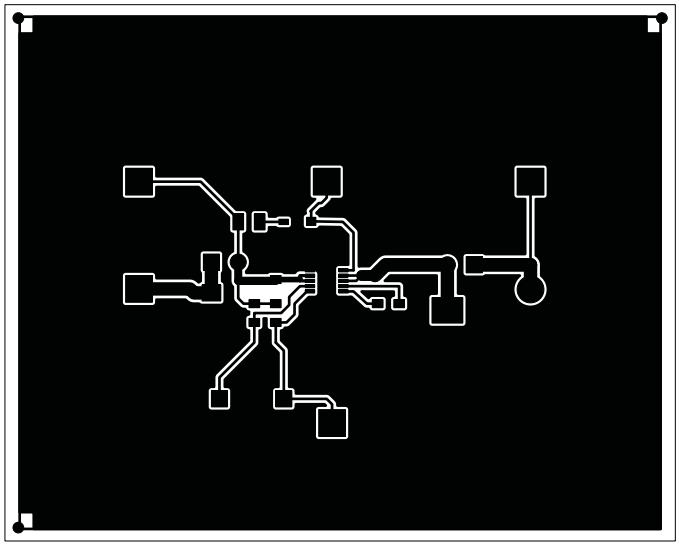

Figure 4. Layer-Two Routing

Copyright © 2011, Texas Instruments Incorporated

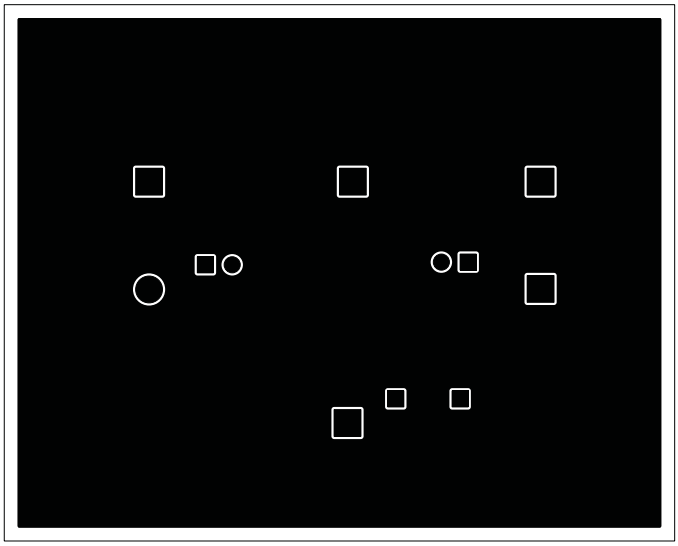

Figure 5. Layer-Three Routing

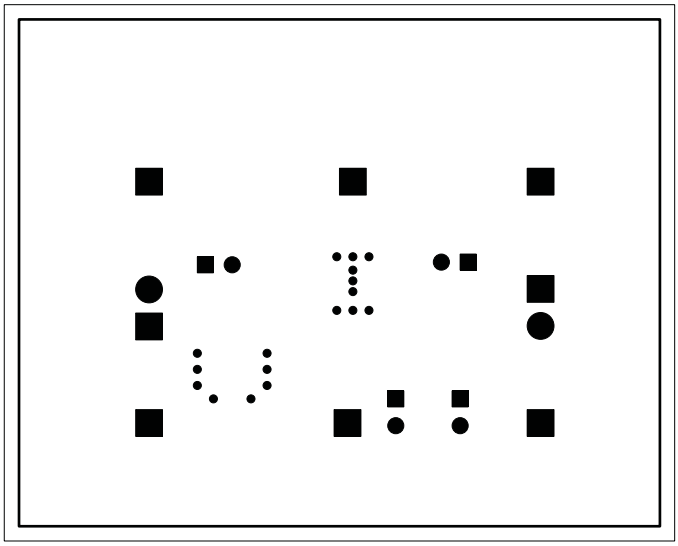

Figure 6. Bottom-Side Placement and Routing

Copyright © 2011, Texas Instruments Incorporated

5 Bill of Materials

Table 3. EVM Bill of Materials

Count	RefDes	Value	Description	Size	Part Number	Mfr
1	C2	0.1 µF	Capacitor, Ceramic, 16V, X7R, 10%	603	Std	Std
1	C1	10 µF	Capacitor, Ceramic, 10V, X5R, 10%	1206	Std	Std
1	C3	150 µF	Capacitor, Tant, Low ESR, 10V, ±10%	7343(D)	TPSD157K010R0100	AVX
1	D1	LN1271R	Diode, LED, Red, 20-mA, 0.9-mcd	0.068 x 0.049 inch	LN1271R	Panasonic
4	J3-6	PEC02SAAN	Header, Male 2-pin, 100mil spacing,	0.100 inch x 2	PEC02SAAN	Sullins
2	R2-3	100k	Resistor, Chip, 1/16W, 1%	603	Std	Std
1	R4	40.2k	Resistor, Chip, 1/16W, 1%	603	Std	Std
1	R5	20k	Resistor, Chip, 1/16W, 1%	603	Std	Std
1	R1	499	Resistor, Chip, 1/10W, 1%	805	Std	Std
2	J1-2	ED555/2DS	Terminal Block, 2-pin, 6-A, 3.5mm	0.27 x 0.25 inch	ED555/2DS	OST
2	TP2-3	5010	Test Point, Red, Thru Hole	0.125 x 0.125 inch	5010	Keystone
2	TP4-5	5011	Test Point, Black, Thru Hole	0.125 x 0.125 inch	5011	Keystone
2	TP1 TP6	5012	Test Point, White, Thru Hole	0.125 x 0.125 inch	5012	Keystone
1	U1	TPS2554DRC or TPS2555DRC	IC, Power-Distribution Switch, Current-Limited	SON	TPS2554DRC or TPS2555DRC	TI
4		SJ-5003	BUMPON HEMISPHERE .44X.20 BLACK		SJ-5003	3M
2			Shunt, Black	100-mil	929950-00	3M
1	—		PCB, 2.5 In x 2.0 In x 0.062 In		PWR010	Any

Copyright © 2011, Texas Instruments Incorporated

Evaluation Board/Kit Important Notice

Texas Instruments (TI) provides the enclosed product(s) under the following conditions:

This evaluation board/kit is intended for use for **ENGINEERING DEVELOPMENT, DEMONSTRATION, OR EVALUATION PURPOSES ONLY** and is not considered by TI to be a finished end-product fit for general consumer use. Persons handling the product(s) must have electronics training and observe good engineering practice standards. As such, the goods being provided are not intended to be complete in terms of required design-, marketing-, and/or manufacturing-related protective considerations, including product safety and environmental measures typically found in end products that incorporate such semiconductor components or circuit boards. This evaluation board/kit does not fall within the scope of the European Union directives regarding electromagnetic compatibility, restricted substances (RoHS), recycling (WEEE), FCC, CE or UL, and therefore may not meet the technical requirements of these directives or other related directives.

Should this evaluation board/kit not meet the specifications indicated in the User's Guide, the board/kit may be returned within 30 days from the date of delivery for a full refund. THE FOREGOING WARRANTY IS THE EXCLUSIVE WARRANTY MADE BY SELLER TO BUYER AND IS IN LIEU OF ALL OTHER WARRANTIES, EXPRESSED, IMPLIED, OR STATUTORY, INCLUDING ANY WARRANTY OF MERCHANTABILITY OR FITNESS FOR ANY PARTICULAR PURPOSE.

The user assumes all responsibility and liability for proper and safe handling of the goods. Further, the user indemnifies TI from all claims arising from the handling or use of the goods. Due to the open construction of the product, it is the user's responsibility to take any and all appropriate precautions with regard to electrostatic discharge.

EXCEPT TO THE EXTENT OF THE INDEMNITY SET FORTH ABOVE, NEITHER PARTY SHALL BE LIABLE TO THE OTHER FOR ANY INDIRECT, SPECIAL, INCIDENTAL, OR CONSEQUENTIAL DAMAGES.

TI currently deals with a variety of customers for products, and therefore our arrangement with the user **is not exclusive.**

TI assumes **no liability for applications assistance, customer product design, software performance, or infringement of patents or services described herein.**

Please read the User's Guide and, specifically, the Warnings and Restrictions notice in the User's Guide prior to handling the product. This notice contains important safety information about temperatures and voltages. For additional information on TI's environmental and/or safety programs, please contact the TI application engineer or visit www.ti.com/esh.

No license is granted under any patent right or other intellectual property right of TI covering or relating to any machine, process, or combination in which such TI products or services might be or are used.

FCC Warning

This evaluation board/kit is intended for use for **ENGINEERING DEVELOPMENT, DEMONSTRATION, OR EVALUATION PURPOSES ONLY** and is not considered by TI to be a finished end-product fit for general consumer use. It generates, uses, and can radiate radio frequency energy and has not been tested for compliance with the limits of computing devices pursuant to part 15 of FCC rules, which are designed to provide reasonable protection against radio frequency interference. Operation of this equipment in other environments may cause interference with radio communications, in which case the user at his own expense will be required to take whatever measures may be required to correct this interference.

EVM Warnings and Restrictions

It is important to operate this EVM within the input voltage range of 0 V to 5.5 V and the output voltage range of 0 V to 5.5 V .

Exceeding the specified input range may cause unexpected operation and/or irreversible damage to the EVM. If there are questions concerning the input range, please contact a TI field representative prior to connecting the input power.

Applying loads outside of the specified output range may result in unintended operation and/or possible permanent damage to the EVM. Please consult the EVM User's Guide prior to connecting any load to the EVM output. If there is uncertainty as to the load specification, please contact a TI field representative.

During normal operation, some circuit components may have case temperatures greater than 85°C. The EVM is designed to operate properly with certain components above 85°C as long as the input and output ranges are maintained. These components include but are not limited to linear regulators, switching transistors, pass transistors, and current sense resistors. These types of devices can be identified using the EVM schematic located in the EVM User's Guide. When placing measurement probes near these devices during operation, please be aware that these devices may be very warm to the touch.

Mailing Address: Texas Instruments, Post Office Box 655303, Dallas, Texas 75265
Copyright © 2011, Texas Instruments Incorporated

IMPORTANT NOTICE

Texas Instruments Incorporated and its subsidiaries (TI) reserve the right to make corrections, modifications, enhancements, improvements, and other changes to its products and services at any time and to discontinue any product or service without notice. Customers should obtain the latest relevant information before placing orders and should verify that such information is current and complete. All products are sold subject to TI's terms and conditions of sale supplied at the time of order acknowledgment.

TI warrants performance of its hardware products to the specifications applicable at the time of sale in accordance with TI's standard warranty. Testing and other quality control techniques are used to the extent TI deems necessary to support this warranty. Except where mandated by government requirements, testing of all parameters of each product is not necessarily performed.

TI assumes no liability for applications assistance or customer product design. Customers are responsible for their products and applications using TI components. To minimize the risks associated with customer products and applications, customers should provide adequate design and operating safeguards.

TI does not warrant or represent that any license, either express or implied, is granted under any TI patent right, copyright, mask work right, or other TI intellectual property right relating to any combination, machine, or process in which TI products or services are used. Information published by TI regarding third-party products or services does not constitute a license from TI to use such products or services or a warranty or endorsement thereof. Use of such information may require a license from a third party under the patents or other intellectual property of the third party, or a license from TI under the patents or other intellectual property of TI.

Reproduction of TI information in TI data books or data sheets is permissible only if reproduction is without alteration and is accompanied by all associated warranties, conditions, limitations, and notices. Reproduction of this information with alteration is an unfair and deceptive business practice. TI is not responsible or liable for such altered documentation. Information of third parties may be subject to additional restrictions.

Resale of TI products or services with statements different from or beyond the parameters stated by TI for that product or service voids all express and any implied warranties for the associated TI product or service and is an unfair and deceptive business practice. TI is not responsible or liable for any such statements.

TI products are not authorized for use in safety-critical applications (such as life support) where a failure of the TI product would reasonably be expected to cause severe personal injury or death, unless officers of the parties have executed an agreement specifically governing such use. Buyers represent that they have all necessary expertise in the safety and regulatory ramifications of their applications, and acknowledge and agree that they are solely responsible for all legal, regulatory and safety-related requirements concerning their products and any use of TI products in such safety-critical applications, notwithstanding any applications-related information or support that may be provided by TI. Further, Buyers must fully indemnify TI and its representatives against any damages arising out of the use of TI products in such safety-critical applications.

TI products are neither designed nor intended for use in military/aerospace applications or environments unless the TI products are specifically designated by TI as military-grade or "enhanced plastic." Only products designated by TI as military-grade meet military specifications. Buyers acknowledge and agree that any such use of TI products which TI has not designated as military-grade is solely at the Buyer's risk, and that they are solely responsible for compliance with all legal and regulatory requirements in connection with such use.

TI products are neither designed nor intended for use in automotive applications or environments unless the specific TI products are designated by TI as compliant with ISO/TS 16949 requirements. Buyers acknowledge and agree that, if they use any non-designated products in automotive applications, TI will not be responsible for any failure to meet such requirements.

Following are URLs where you can obtain information on other Texas Instruments products and application solutions:

Products		**Applications**	
Audio	www.ti.com/audio	Communications and Telecom	www.ti.com/communications
Amplifiers	amplifier.ti.com	Computers and Peripherals	www.ti.com/computers
Data Converters	dataconverter.ti.com	Consumer Electronics	www.ti.com/consumer-apps
DLP® Products	www.dlp.com	Energy and Lighting	www.ti.com/energy
DSP	dsp.ti.com	Industrial	www.ti.com/industrial
Clocks and Timers	www.ti.com/clocks	Medical	www.ti.com/medical
Interface	interface.ti.com	Security	www.ti.com/security
Logic	logic.ti.com	Space, Avionics and Defense	www.ti.com/space-avionics-defense
Power Mgmt	power.ti.com	Transportation and Automotive	www.ti.com/automotive
Microcontrollers	microcontroller.ti.com	Video and Imaging	www.ti.com/video
RFID	www.ti-rfid.com	Wireless	www.ti.com/wireless-apps
RF/IF and ZigBee® Solutions	www.ti.com/lprf		
	TI E2E Community Home Page		e2e.ti.com

Mailing Address: Texas Instruments, Post Office Box 655303, Dallas, Texas 75265
Copyright © 2011, Texas Instruments Incorporated