TPS2378 EVM User's Guide

This User's Guide describes the evaluation module (EVM) for the TPS2378 (TPS2378EVM-105). TPS2378 is an IEEE802.3at type 2 compliant powered device (PD) controller.

Contents

1 Introduction 2
1.1 Features 2
1.2 Applications 2
2 Electrical Specifications at 25°C 2
3 Description 3
4 Schematic 4
5 General Configuration and Description 5
5.1 Physical Access 5
5.2 Test Setup 5
6 EVM Assembly Drawings and Layout Guidelines 6
6.1 PC Drawings 6
6.2 Layout Guidelines 9
6.3 EMI Containment 9
7 Bill of Materials 10

List of Figures

1 TPS2378EVM Schematic 4
2 Typical TPS2378EVM Test Setup 6
3 Top Side Placement 6
4 Top Side Routing 7
5 Layer Two Routing 7
6 Layer Three Routing 8
7 Bottom Side Routing 8
8 Bottom Side Placement 9

List of Tables

1 TPS2378EVM Electrical and Performance Specifications 2
2 Connector Functionality 5
3 Test Points 5
4 Jumpers 5
5 TPS2378EVM Bill of Materials 10

Copyright © 2012, Texas Instruments Incorporated

1 Introduction

The TPS2378EVM allows reference circuit evaluation of the TI TPS2378 PD controller. The TPS2378 features an auxiliary power detect (APD) input, providing priority for an external power adapter. It also features a 100 V pass transistor, 140 mA inrush current limiting, type-2 indication, auto-retry fault protection, and an open-drain power-good output.

1.1 Features

- Gigabit Ethernet pass through interface
- Switched output return for “ease of use” loading
- Adapter input capability
- IEEE 802.3at type-2 hardware classification with status flag (T2P) and LED
- DC/DC converter enable (CDB)
- Robust 100 V, 0.5 Ω hotswap MOSFET
- Operating current up to 1A typical

1.2 Applications

- IEEE 802.3at-compliant devices
- Video and VoIP telephones
- Multiband access points
- Security cameras
- Pico-base stations

2 Electrical Specifications at 25°C

Table 1. TPS2378EVM Electrical and Performance Specifications

PARAMETER	CONDITION	MIN	TYP	MAX	UNITS
POWER INTERFACE					
Input Voltage	Applied to the power pins of connectors J1 or J3	0	–	57	V
Operating Voltage	After start up.	30	–	57	V
Input UVLO	Rising input voltage at device terminals.	–	–	40	V
	Falling input voltage.	30.5	–	–	
Detection voltage	At device terminals	1.4	–	10.1	V
Classification voltage	At device terminals	11.9	–	23.0	V
Classification current	Rclass = 63.4 Ω	38	–	42	mA
Inrush current-limit		100	–	180	mA
Operating current-limit		850	–	1200	mA
Efficiency	Two input pairs: Measured from J1 to J6 with J5 shorted. 31W output power		97.4%		

Copyright © 2012, Texas Instruments Incorporated

3 Description

TPS2378EVM-105 enables full evaluation of the TPS2378 device. Refer to the schematic shown in Figure 1. Ethernet power is applied from J1 to T1 and is dropped to the diode bridges (D4/D5/D10/D11 or D6/D7/D12/D13) from the T1 center taps. The series R-C circuit from each center tap help balance the Ethernet cable impedance and are critical for ESD and EMI/EMC performance. These circuits are terminated at TP11 (EGND) through the high voltage capacitor, C11. At the output of the diode bridges is the EMI/EMC filter and transient protection for the TPS2378. R9 provides the detection signature and R15 provides the class 4 signature resistance to the PSE.

To the right of the TPS2378 (U1) is the switched side of the PD controller. The TPS2378 RTN pin provides inrush limited turn on and charge of the bulk capacitor, C4. During inrush, the TPS2378 CDB pin is pulled low (with respect to the RTN pin). Since the CDB pin is connected to the GATE of Q1, Q1 is off during inrush and J6 pin 1 is not connected to the RTN pin. This allows the output load to remain connected during EVM testing.

Input power can also be applied at J3 from a dc source. EMI/EMC filtering is provided at this connector as well and diode D1 ensures reverse voltage protection. R4 and R7 provide a threshold for the TPS2378 APD pin so that the TPS2378 internal MOSFET is disabled when the voltage at J3 is above approximately 38V. This ensures that the adapter has priority over the PSE source. LED's D2 and D3 provide operational visual indications of T2P and ON respectively.

Copyright © 2012, Texas Instruments Incorporated

4 Schematic

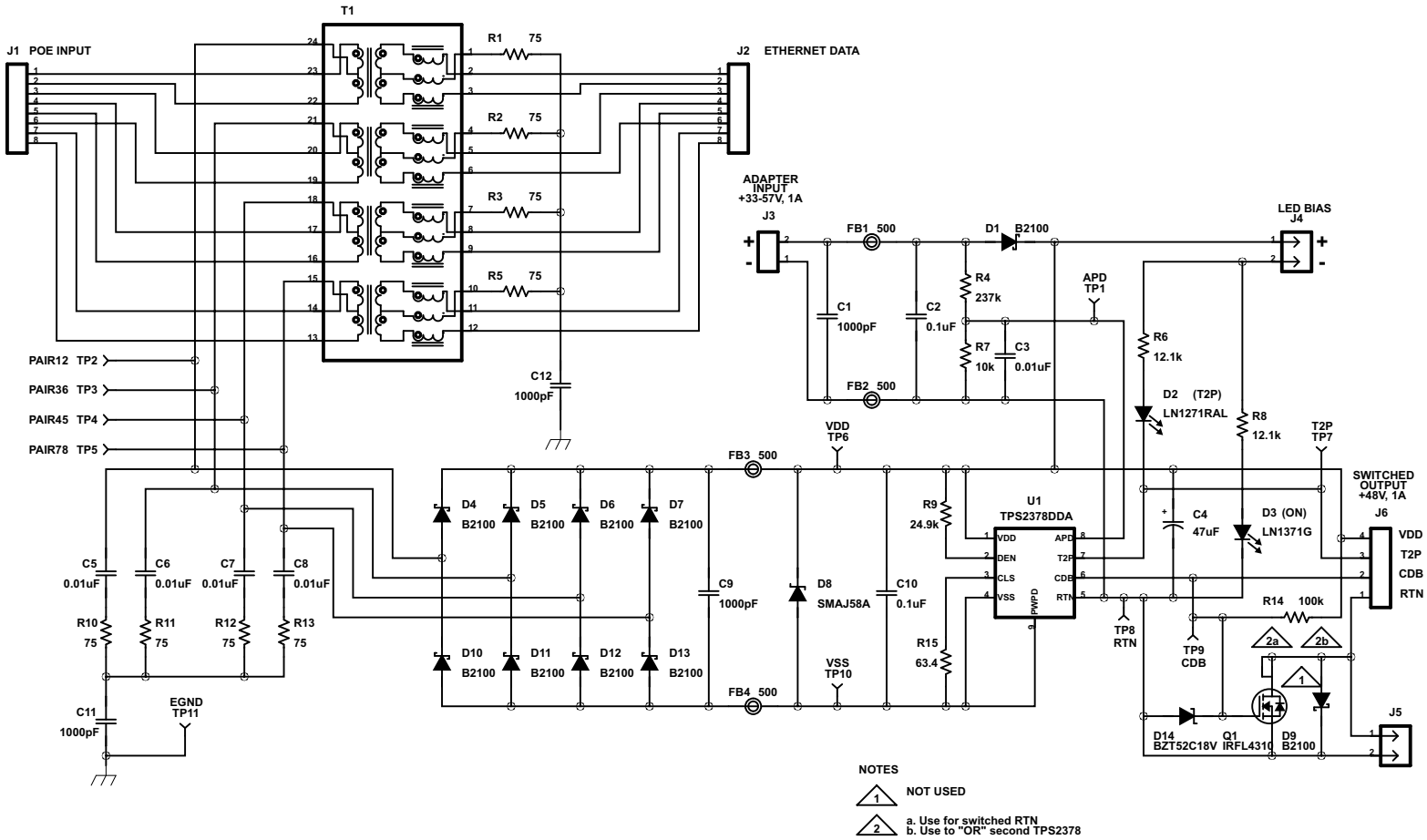

Figure 1. TPS2378EVM Schematic

Copyright © 2012, Texas Instruments Incorporated

5 General Configuration and Description

5.1 Physical Access

Table 2 lists the TPS2378EVM connector functionality, Table 3 describes the test point availability and Table 4 describes the jumper functionality.

Table 2. Connector Functionality

Connector	Label	Description
J1	PWR+DATA	Power over ethernet (POE) input. Connect to power sourcing equipment (PSE) power and data source.
J2	DATA	Ethernet data pass through. Connect to downstream ethernet device.
J3	ADAPTER	DC adapter input. Connect to dc power supply. DC voltage above 38V will disable the TPS2378 internal MOSFET and activate the T2P LED.
J6	J6	Output connector to load. Connect pin #4 (VDD) to positive input and pin #1 (RTN) to low side of load. Pin #2 (CDB) can be used to inhibit the converter while the TPS2378 output is ramping up. Pin #3 (T2P) can be used to notify the load of when high power source is present.
D2 (RED)	T2P	T2P (type 2 PSE) LED. When ON this indicates that either a type 2 PSE is detected or an adapter voltage source (above 38V) is present at J3.
D3 (GREEN)	ON	TPS2378 Output Powered.

Table 3. Test Points

Test Point	Color	Label	Description
TP1	WHT	APD	Auxiliar power detect
TP2	RED	PAIR12	Data pair from pins 1 and 2 of J1
TP3	ORG	PAIR36	Data pair from pins 3 and 6 of J1
TP4	RED	PAIR45	Spare pair from pins 4 and 5 of J1
TP5	ORG	PAIR78	Spare pair from pins 7 and 8 of J1
TP6	RED	VDD	High side output from bridge
TP7	WHT	T2P	Type 2 PSE output from TPS2378
TP8	BLK	RTN	Switched low side from TPS2378
TP9	WHT	CDB	Converter disable output from TPS2378
TP10	BLK	VSS	Low side output from bridge
TP11	SM	EGND	Earth or chassis ground point

Table 4. Jumpers

Jumper	Label	Description
J4	J4	LED bias jumper. Install to furnish LED bias for T2P and ON LED's
J5	J5	Switched output return bypass jumper.

5.2 Test Setup

Figure 2 shows a typical test setup for TPS2378EVM. Connect J1 to the power sourcing equipment (PSE) or alternatively connect J3 to a wall adapter or power supply. Power for the Ethernet device is available at J6 and the pass through Ethernet data is available at J2.

Copyright © 2012, Texas Instruments Incorporated

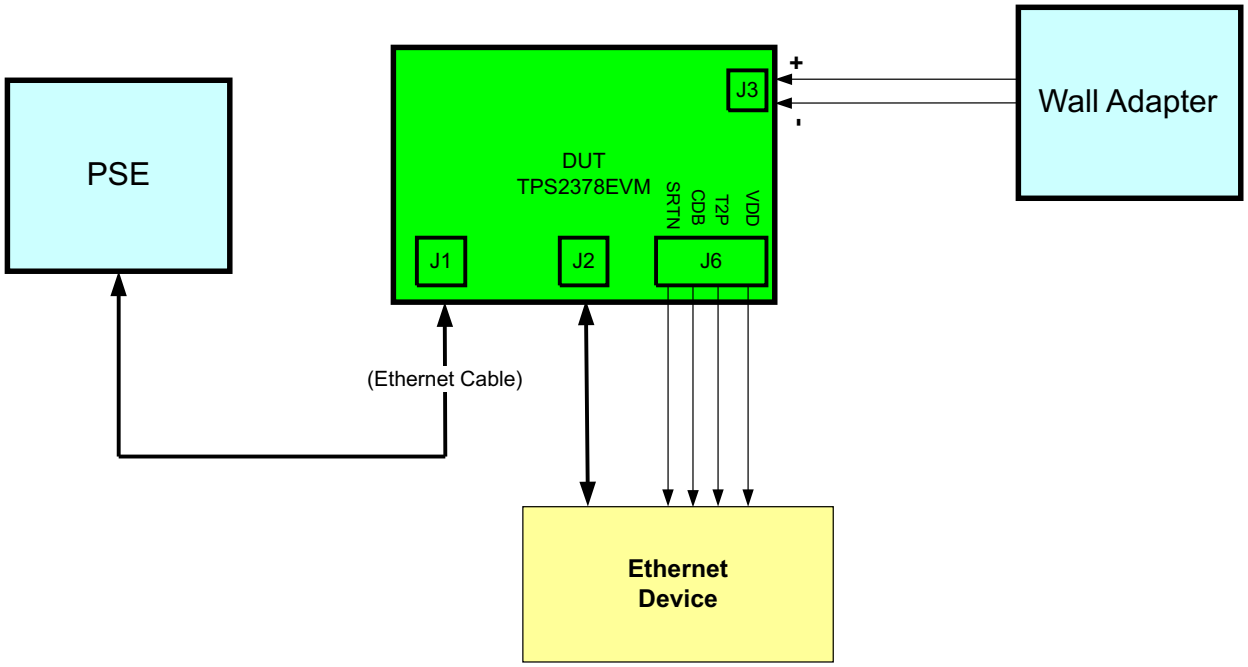

Figure 2. Typical TPS2378EVM Test Setup

6 EVM Assembly Drawings and Layout Guidelines

6.1 PC Drawings

The following figures show component placement and layout of the EVM.

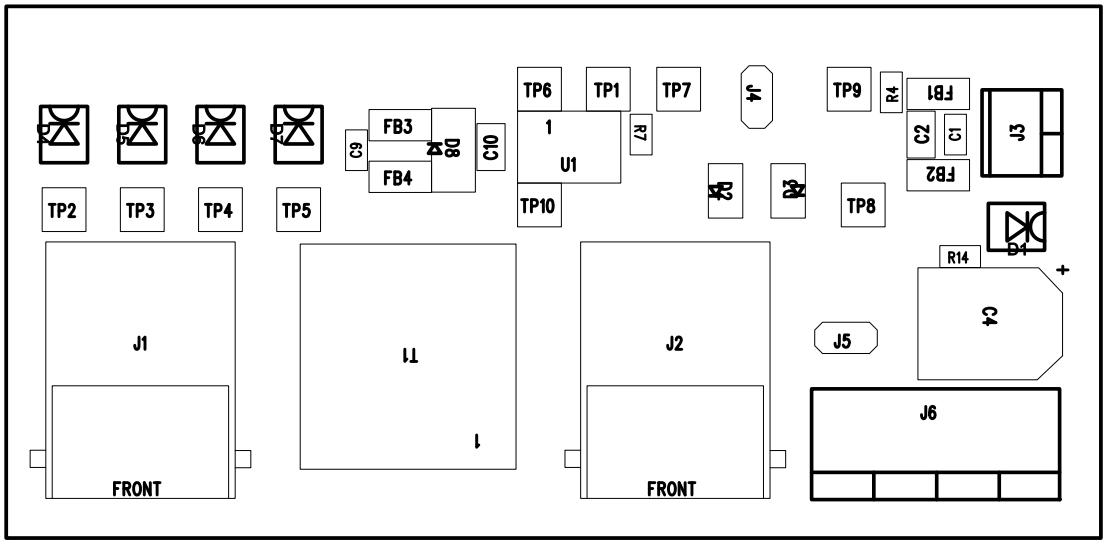

Figure 3. Top Side Placement

Copyright © 2012, Texas Instruments Incorporated

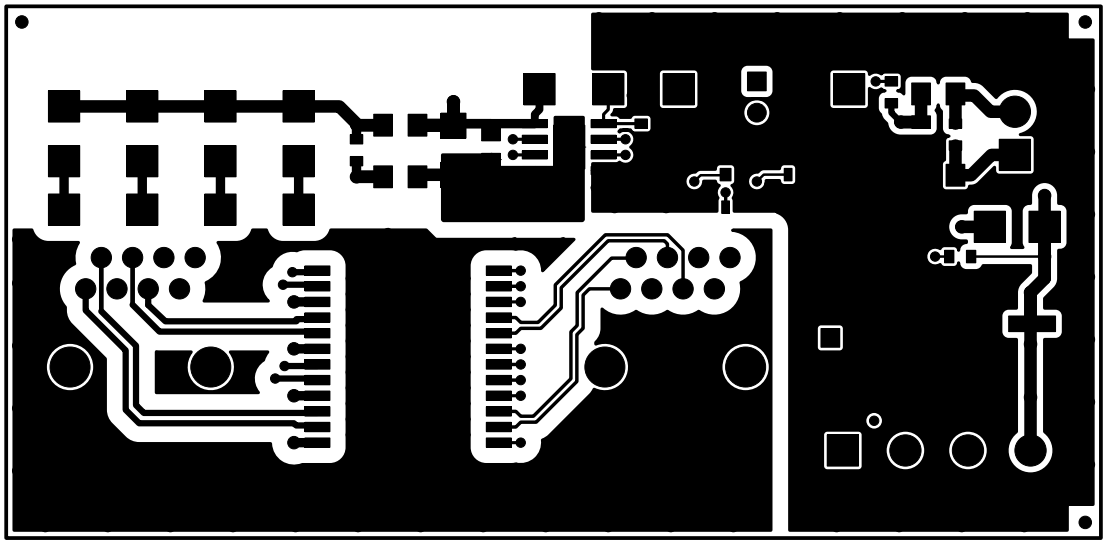

Figure 4. Top Side Routing

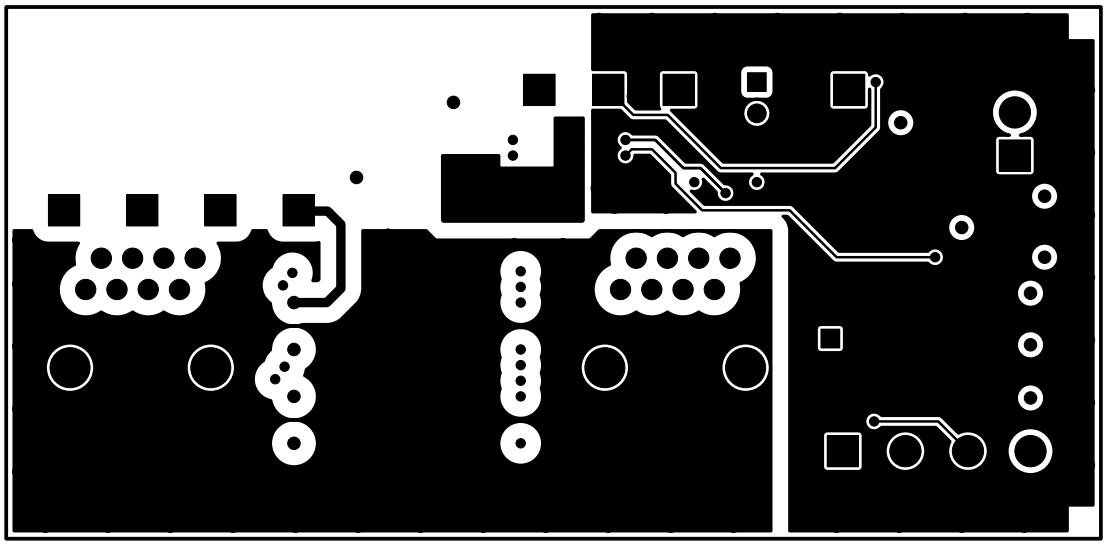

Figure 5. Layer Two Routing

Copyright © 2012, Texas Instruments Incorporated

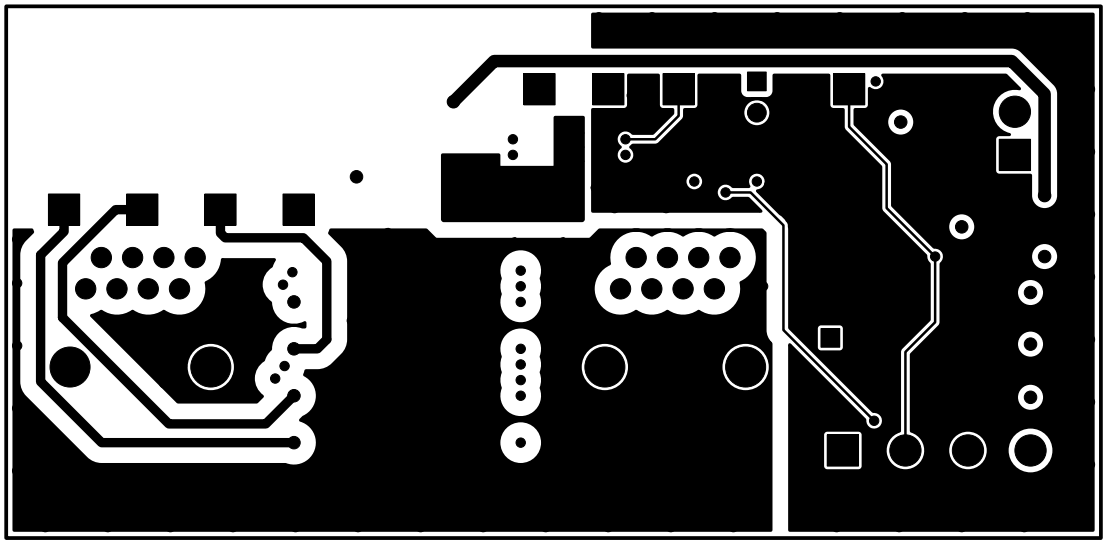

Figure 6. Layer Three Routing

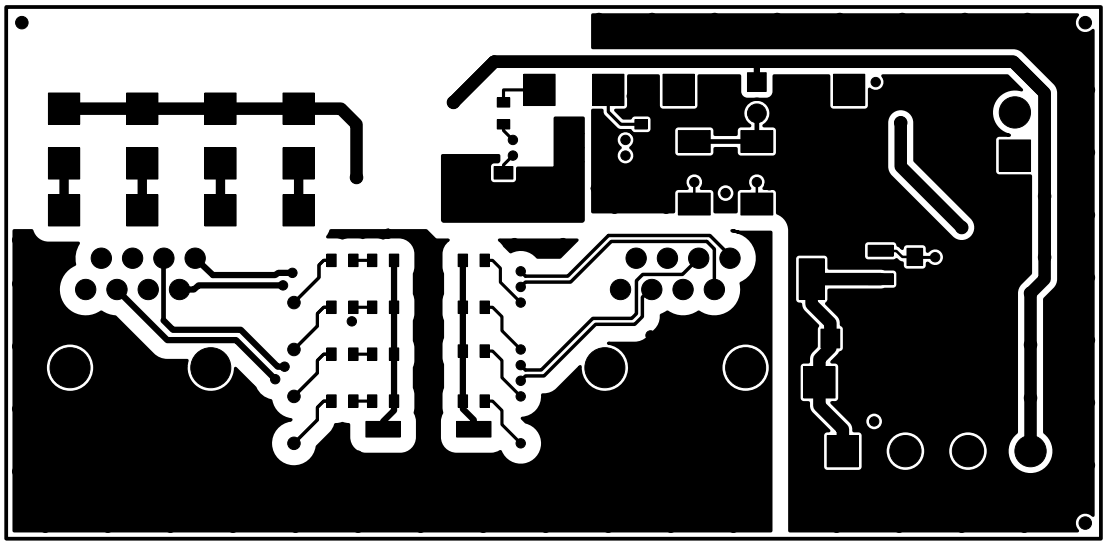

Figure 7. Bottom Side Routing

Copyright © 2012, Texas Instruments Incorporated

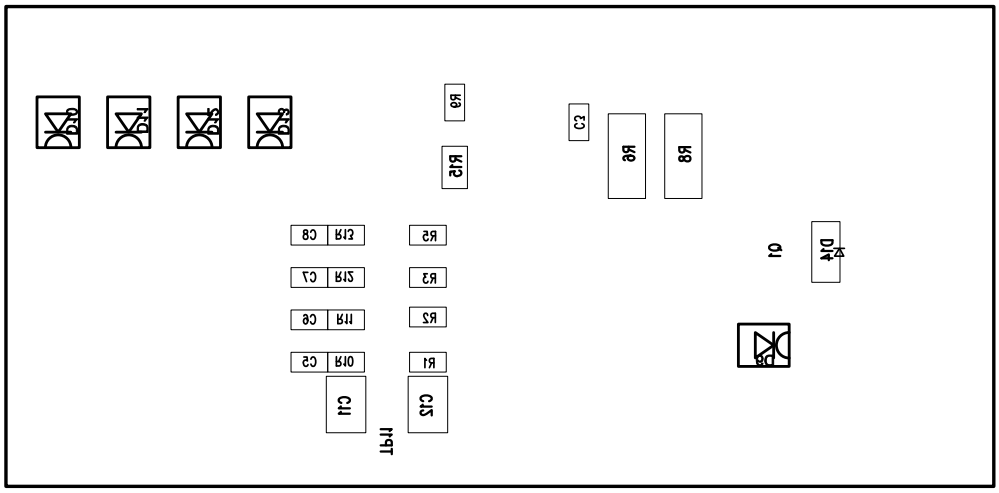

Figure 8. Bottom Side Placement

6.2 Layout Guidelines

The layout of the PoE front end should follow power and EMI/ESD best practice guidelines. A basic set of recommendations include:

- Parts placement must be driven by power flow in a point-to-point manner; RJ-45, Ethernet transformer, diode bridges, TVS and 0.1-µF capacitor, and TPS2378.
- All leads should be as short as possible with wide power traces and paired signal and return.
- There should not be any crossovers of signals from one part of the flow to another.
- Spacing consistent with safety standards like IEC60950 must be observed between the 48-V input voltage rails and between the input and an isolated converter output.
- The TPS2378 should be located over split, local ground planes referenced to VSS for the PoE input and to RTN for the switched output.
- Large copper fills and traces should be used on SMT power-dissipating devices, and wide traces or overlay copper fills should be used in the power path.

6.3 EMI Containment

- Use compact loops for dv/dt and di/dt circuit paths (power loops and gate drives)
- Use minimal, yet thermally adequate, copper areas for heat sinking of components tied to switching nodes (minimize exposed radiating surface).
- Use copper ground planes (possible stitching) and top layer copper floods (surround circuitry with ground floods)
- Use 4 layer PCB if economically feasible (for better grounding)
- Minimize the amount of copper area associated with input traces (to minimize radiated pickup)
- Use Bob Smith terminations, Bob Smith EFT capacitor, and Bob Smith plane
- Use Bob Smith plane as ground shield on input side of PCB (creating a phantom or literal earth ground)
- Use of ferrite beads on input (allow for possible use of beads or 0 ohm resistors)
- Maintain physical separation between input-related circuitry and power circuitry (use ferrite beads as boundary line)
- Possible use of common-mode inductors
- Possible use of integrated RJ-45 jacks (shielded with internal transformer and Bob Smith terminations)
- End-product enclosure considerations (shielding)

Copyright © 2012, Texas Instruments Incorporated

7 Bill of Materials

Table 5. TPS2378EVM Bill of Materials

Count	REFDES	Value	Description	Size	Part Number	Supplier
4	FB1-4	500	Bead, Ferrite, 2000mA, 60m-ohm	1206	MI1206L501R-10	Steward
5	C3 C5-8	0.01uF	Capacitor, Ceramic, 100V, X7R, 10%	603	STD	STD
2	C1 C9	1000pF	Capacitor, Ceramic, 100V, X7R, 10%	603	STD	STD
2	C2 C10	0.1uF	Capacitor, Ceramic, 100V, X7R, 10%	805	STD	STD
2	C11-12	1000pF	Capacitor, Ceramic, 2kV, X7R, 15%	1210	Std	STD
1	C4	47uF	Capacitor, Aluminum, 63V, ±20%	0.328 x 0.390 inch	EEE-FK1J470P	Panasonic
2	J1-2	5520252-4	Connector, Jack, Modular, 8 POS	0.705 x 0.820 inch	5520252-4	AMP
1	D14	BZT52C18V	Diode, Zener, Planar Power, 500mW, 18V	SOD-123	BZT52C18-7-F	Diodes, Inc
1	D2	LN1271RAL	Diode, LED, Ultra Bright Red, 10-mA, 5-mcd	0.114 X 0.049 inch	LN1271RAL	Panasonic
1	D3	LN1371G	Diode, LED, Green, 10-mA, 2.6-mcd	0.114 X 0.049 inch	LN1371G	Panasonic
9	D1 D4-7 D10-13	B2100	Diode, Schottky, 2-A, 100-V	SMB	B2100-13-F	Diodes, Inc
0	D9	B2100	Diode, Schottky, 2-A, 100-V	SMB	B2100-13-F	Diodes, Inc
1	D8	SMAJ58A	Diode, TVS, 58-V, 1W	SMA	SMAJ58A-13-F	Diodes, Inc
2	J4 J5	PEC02SAAN	Header, Male 2-pin, 100mil spacing	0.100 inch x 2	PEC02SAAN	Sullins
1	R14	100k	Resistor, Chip, 1/16W, 1%	603	STD	STD
1	R7	10k	Resistor, Chip, 1/16W, 1%	603	STD	STD
1	R4	237k	Resistor, Chip, 1/16W, 1%	603	STD	STD
1	R9	24.9k	Resistor, Chip, 1/16W, 1%	603	STD	STD
8	R1-3 R5 R10-13	75	Resistor, Chip, 1/16W, 1%	603	STD	STD
1	R15	63.4	Resistor, Chip, 1/10W, 1%	805	STD	STD
2	R6 R8	12.1k	Resistor, Chip, 0.6W, 1%	2010	STD	STD
1	J6	ED120/4DS	Terminal Block, 4-pin, 15-A, 5.1mm	0.80 x 0.35 inch	ED120/4DS	OST
1	J3	ED555/2DS	Terminal Block, 2-pin, 6-A, 3.5mm	0.27 x 0.25 inch	ED555/2DS	OST
3	TP2 TP4 TP6	5010	Test Point, Red, Thru Hole	0.125 x 0.125 inch	5010	Keystone
2	TP8 TP10	5011	Test Point, Black, Thru Hole	0.125 x 0.125 inch	5011	Keystone
3	TP1 TP7 TP9	5012	Test Point, White, Thru Hole	0.125 x 0.125 inch	5012	Keystone
2	TP3 TP5	5013	Test Point, Orange, Thru Hole	0.125 x 0.125 inch	5013	Keystone
1	TP11	5016	Test Point, SM, 0.150 x 0.090	0.185 x 0.135 inch	5016	Keystone
1	U1	TPS2378DDA	IC, IEEE 802.3at PoE High Power PD Controller	TPS2378DDA	TPS2378DDA	TI
1	Q1	IRFL4310	MOSFET, N-ch, 100V, 200-milliOhms	SOT223	IRFL4310TRPBF	IRF
1	T1	749022011 or H6096NL	PoE Plus Gigabit Ethernet Transfomer	S024	749022011 or H6096NL	Wurth Electronics or Pulse

Copyright © 2012, Texas Instruments Incorporated

EVALUATION BOARD/KIT/MODULE (EVM) ADDITIONAL TERMS

Texas Instruments (TI) provides the enclosed Evaluation Board/Kit/Module (EVM) under the following conditions:

The user assumes all responsibility and liability for proper and safe handling of the goods. Further, the user indemnifies TI from all claims arising from the handling or use of the goods.

Should this evaluation board/kit not meet the specifications indicated in the User's Guide, the board/kit may be returned within 30 days from the date of delivery for a full refund. THE FOREGOING LIMITED WARRANTY IS THE EXCLUSIVE WARRANTY MADE BY SELLER TO BUYER AND IS IN LIEU OF ALL OTHER WARRANTIES, EXPRESSED, IMPLIED, OR STATUTORY, INCLUDING ANY WARRANTY OF MERCHANTABILITY OR FITNESS FOR ANY PARTICULAR PURPOSE. EXCEPT TO THE EXTENT OF THE INDEMNITY SET FORTH ABOVE, NEITHER PARTY SHALL BE LIABLE TO THE OTHER FOR ANY INDIRECT, SPECIAL, INCIDENTAL, OR CONSEQUENTIAL DAMAGES.

Please read the User's Guide and, specifically, the Warnings and Restrictions notice in the User's Guide prior to handling the product. This notice contains important safety information about temperatures and voltages. For additional information on TI's environmental and/or safety programs, please visit www.ti.com/esh or contact TI.

No license is granted under any patent right or other intellectual property right of TI covering or relating to any machine, process, or combination in which such TI products or services might be or are used. TI currently deals with a variety of customers for products, and therefore our arrangement with the user is not exclusive. TI assumes no liability for applications assistance, customer product design, software performance, or infringement of patents or services described herein.

REGULATORY COMPLIANCE INFORMATION

As noted in the EVM User's Guide and/or EVM itself, this EVM and/or accompanying hardware may or may not be subject to the Federal Communications Commission (FCC) and Industry Canada (IC) rules.

For EVMs **not** subject to the above rules, this evaluation board/kit/module is intended for use for ENGINEERING DEVELOPMENT, DEMONSTRATION OR EVALUATION PURPOSES ONLY and is not considered by TI to be a finished end product fit for general consumer use. It generates, uses, and can radiate radio frequency energy and has not been tested for compliance with the limits of computing devices pursuant to part 15 of FCC or ICES-003 rules, which are designed to provide reasonable protection against radio frequency interference. Operation of the equipment may cause interference with radio communications, in which case the user at his own expense will be required to take whatever measures may be required to correct this interference.

General Statement for EVMs including a radio

User Power/Frequency Use Obligations: This radio is intended for development/professional use only in legally allocated frequency and power limits. Any use of radio frequencies and/or power availability of this EVM and its development application(s) must comply with local laws governing radio spectrum allocation and power limits for this evaluation module. It is the user's sole responsibility to only operate this radio in legally acceptable frequency space and within legally mandated power limitations. Any exceptions to this are strictly prohibited and unauthorized by Texas Instruments unless user has obtained appropriate experimental/development licenses from local regulatory authorities, which is responsibility of user including its acceptable authorization.

For EVMs annotated as FCC – FEDERAL COMMUNICATIONS COMMISSION Part 15 Compliant

Caution

This device complies with part 15 of the FCC Rules. Operation is subject to the following two conditions: (1) This device may not cause harmful interference, and (2) this device must accept any interference received, including interference that may cause undesired operation.

Changes or modifications not expressly approved by the party responsible for compliance could void the user's authority to operate the equipment.

FCC Interference Statement for Class A EVM devices

This equipment has been tested and found to comply with the limits for a Class A digital device, pursuant to part 15 of the FCC Rules. These limits are designed to provide reasonable protection against harmful interference when the equipment is operated in a commercial environment. This equipment generates, uses, and can radiate radio frequency energy and, if not installed and used in accordance with the instruction manual, may cause harmful interference to radio communications. Operation of this equipment in a residential area is likely to cause harmful interference in which case the user will be required to correct the interference at his own expense.

FCC Interference Statement for Class B EVM devices

This equipment has been tested and found to comply with the limits for a Class B digital device, pursuant to part 15 of the FCC Rules. These limits are designed to provide reasonable protection against harmful interference in a residential installation. This equipment generates, uses and can radiate radio frequency energy and, if not installed and used in accordance with the instructions, may cause harmful interference to radio communications. However, there is no guarantee that interference will not occur in a particular installation. If this equipment does cause harmful interference to radio or television reception, which can be determined by turning the equipment off and on, the user is encouraged to try to correct the interference by one or more of the following measures:

- Reorient or relocate the receiving antenna.
- Increase the separation between the equipment and receiver.
- Connect the equipment into an outlet on a circuit different from that to which the receiver is connected.
- Consult the dealer or an experienced radio/TV technician for help.

For EVMs annotated as IC – INDUSTRY CANADA Compliant

This Class A or B digital apparatus complies with Canadian ICES-003.

Changes or modifications not expressly approved by the party responsible for compliance could void the user's authority to operate the equipment.

Concerning EVMs including radio transmitters

This device complies with Industry Canada licence-exempt RSS standard(s). Operation is subject to the following two conditions: (1) this device may not cause interference, and (2) this device must accept any interference, including interference that may cause undesired operation of the device.

Concerning EVMs including detachable antennas

Under Industry Canada regulations, this radio transmitter may only operate using an antenna of a type and maximum (or lesser) gain approved for the transmitter by Industry Canada. To reduce potential radio interference to other users, the antenna type and its gain should be so chosen that the equivalent isotropically radiated power (e.i.r.p.) is not more than that necessary for successful communication.

This radio transmitter has been approved by Industry Canada to operate with the antenna types listed in the user guide with the maximum permissible gain and required antenna impedance for each antenna type indicated. Antenna types not included in this list, having a gain greater than the maximum gain indicated for that type, are strictly prohibited for use with this device.

Cet appareil numérique de la classe A ou B est conforme à la norme NMB-003 du Canada.

Les changements ou les modifications pas expressément approuvés par la partie responsable de la conformité ont pu vider l'autorité de l'utilisateur pour actionner l'équipement.

Concernant les EVMs avec appareils radio

Le présent appareil est conforme aux CNR d'Industrie Canada applicables aux appareils radio exempts de licence. L'exploitation est autorisée aux deux conditions suivantes : (1) l'appareil ne doit pas produire de brouillage, et (2) l'utilisateur de l'appareil doit accepter tout brouillage radioélectrique subi, même si le brouillage est susceptible d'en compromettre le fonctionnement.

Concernant les EVMs avec antennes détachables

Conformément à la réglementation d'Industrie Canada, le présent émetteur radio peut fonctionner avec une antenne d'un type et d'un gain maximal (ou inférieur) approuvé pour l'émetteur par Industrie Canada. Dans le but de réduire les risques de brouillage radioélectrique à l'intention des autres utilisateurs, il faut choisir le type d'antenne et son gain de sorte que la puissance isotrope rayonnée équivalente (p.i.r.e.) ne dépasse pas l'intensité nécessaire à l'établissement d'une communication satisfaisante.

Le présent émetteur radio a été approuvé par Industrie Canada pour fonctionner avec les types d'antenne énumérés dans le manuel d'usage et ayant un gain admissible maximal et l'impédance requise pour chaque type d'antenne. Les types d'antenne non inclus dans cette liste, ou dont le gain est supérieur au gain maximal indiqué, sont strictement interdits pour l'exploitation de l'émetteur.

【Important Notice for Users of this Product in Japan】

This development kit is NOT certified as Confirming to Technical Regulations of Radio Law of Japan

If you use this product in Japan, you are required by Radio Law of Japan to follow the instructions below with respect to this product:

1. Use this product in a shielded room or any other test facility as defined in the notification #173 issued by Ministry of Internal Affairs and Communications on March 28, 2006, based on Sub-section 1.1 of Article 6 of the Ministry's Rule for Enforcement of Radio Law of Japan,
2. Use this product only after you obtained the license of Test Radio Station as provided in Radio Law of Japan with respect to this product, or
3. Use of this product only after you obtained the Technical Regulations Conformity Certification as provided in Radio Law of Japan with respect to this product. Also, please do not transfer this product, unless you give the same notice above to the transferee. Please note that if you could not follow the instructions above, you will be subject to penalties of Radio Law of Japan.

Texas Instruments Japan Limited
(address) 24-1, Nishi-Shinjuku 6 chome, Shinjukku-ku, Tokyo, Japan

http://www.tij.co.jp

【ご使用にあたっての注】

本開発キットは技術基準適合証明を受けておりません。

本製品のご使用に際しては、電波法遵守のため、以下のいずれかの措置を取っていただく必要がありますのでご注意ください。

1. 電波法施行規則第6条第1項第1号に基づく平成18年3月28日総務省告示第173号で定められた電波暗室等の試験設備でご使用いただく。
2. 実験局の免許を取得後ご使用いただく。
3. 技術基準適合証明を取得後ご使用いただく。

なお、本製品は、上記の「ご使用にあたっての注意」を譲渡先、移転先に通知しない限り、譲渡、移転できないものとします。

上記を遵守頂けない場合は、電波法の罰則が適用される可能性があることをご留意ください。

日本テキサス・インスツルメンツ株式会社
東京都新宿区西新宿６丁目２４番１号
西新宿三井ビル
http://www.tij.co.jp

EVALUATION BOARD/KIT/MODULE (EVM)
WARNINGS, RESTRICTIONS AND DISCLAIMERS

For Feasibility Evaluation Only, in Laboratory/Development Environments. Unless otherwise indicated, this EVM is not a finished electrical equipment and not intended for consumer use. It is intended solely for use for preliminary feasibility evaluation in laboratory/development environments by technically qualified electronics experts who are familiar with the dangers and application risks associated with handling electrical mechanical components, systems and subsystems. It should not be used as all or part of a finished end product.

Your Sole Responsibility and Risk. You acknowledge, represent and agree that:

1. You have unique knowledge concerning Federal, State and local regulatory requirements (including but not limited to Food and Drug Administration regulations, if applicable) which relate to your products and which relate to your use (and/or that of your employees, affiliates, contractors or designees) of the EVM for evaluation, testing and other purposes.
2. You have full and exclusive responsibility to assure the safety and compliance of your products with all such laws and other applicable regulatory requirements, and also to assure the safety of any activities to be conducted by you and/or your employees, affiliates, contractors or designees, using the EVM. Further, you are responsible to assure that any interfaces (electronic and/or mechanical) between the EVM and any human body are designed with suitable isolation and means to safely limit accessible leakage currents to minimize the risk of electrical shock hazard.
3. You will employ reasonable safeguards to ensure that your use of the EVM will not result in any property damage, injury or death, even if the EVM should fail to perform as described or expected.
4. You will take care of proper disposal and recycling of the EVM's electronic components and packing materials.

Certain Instructions. It is important to operate this EVM within TI's recommended specifications and environmental considerations per the user guidelines. Exceeding the specified EVM ratings (including but not limited to input and output voltage, current, power, and environmental ranges) may cause property damage, personal injury or death. If there are questions concerning these ratings please contact a TI field representative prior to connecting interface electronics including input power and intended loads. Any loads applied outside of the specified output range may result in unintended and/or inaccurate operation and/or possible permanent damage to the EVM and/or interface electronics. Please consult the EVM User's Guide prior to connecting any load to the EVM output. If there is uncertainty as to the load specification, please contact a TI field representative. During normal operation, some circuit components may have case temperatures greater than 60°C as long as the input and output are maintained at a normal ambient operating temperature. These components include but are not limited to linear regulators, switching transistors, pass transistors, and current sense resistors which can be identified using the EVM schematic located in the EVM User's Guide. When placing measurement probes near these devices during normal operation, please be aware that these devices may be very warm to the touch. As with all electronic evaluation tools, only qualified personnel knowledgeable in electronic measurement and diagnostics normally found in development environments should use these EVMs.

Agreement to Defend, Indemnify and Hold Harmless. You agree to defend, indemnify and hold TI, its licensors and their representatives harmless from and against any and all claims, damages, losses, expenses, costs and liabilities (collectively, "Claims") arising out of or in connection with any use of the EVM that is not in accordance with the terms of the agreement. This obligation shall apply whether Claims arise under law of tort or contract or any other legal theory, and even if the EVM fails to perform as described or expected.

Safety-Critical or Life-Critical Applications. If you intend to evaluate the components for possible use in safety critical applications (such as life support) where a failure of the TI product would reasonably be expected to cause severe personal injury or death, such as devices which are classified as FDA Class III or similar classification, then you must specifically notify TI of such intent and enter into a separate Assurance and Indemnity Agreement.

Mailing Address: Texas Instruments, Post Office Box 655303, Dallas, Texas 75265
Copyright © 2012, Texas Instruments Incorporated

EVALUATION BOARD/KIT/MODULE (EVM) ADDITIONAL TERMS

Texas Instruments (TI) provides the enclosed Evaluation Board/Kit/Module (EVM) under the following conditions:

The user assumes all responsibility and liability for proper and safe handling of the goods. Further, the user indemnifies TI from all claims arising from the handling or use of the goods.

Should this evaluation board/kit not meet the specifications indicated in the User's Guide, the board/kit may be returned within 30 days from the date of delivery for a full refund. THE FOREGOING LIMITED WARRANTY IS THE EXCLUSIVE WARRANTY MADE BY SELLER TO BUYER AND IS IN LIEU OF ALL OTHER WARRANTIES, EXPRESSED, IMPLIED, OR STATUTORY, INCLUDING ANY WARRANTY OF MERCHANTABILITY OR FITNESS FOR ANY PARTICULAR PURPOSE. EXCEPT TO THE EXTENT OF THE INDEMNITY SET FORTH ABOVE, NEITHER PARTY SHALL BE LIABLE TO THE OTHER FOR ANY INDIRECT, SPECIAL, INCIDENTAL, OR CONSEQUENTIAL DAMAGES.

Please read the User's Guide and, specifically, the Warnings and Restrictions notice in the User's Guide prior to handling the product. This notice contains important safety information about temperatures and voltages. For additional information on TI's environmental and/or safety programs, please visit www.ti.com/esh or contact TI.

No license is granted under any patent right or other intellectual property right of TI covering or relating to any machine, process, or combination in which such TI products or services might be or are used. TI currently deals with a variety of customers for products, and therefore our arrangement with the user is not exclusive. TI assumes no liability for applications assistance, customer product design, software performance, or infringement of patents or services described herein.

REGULATORY COMPLIANCE INFORMATION

As noted in the EVM User's Guide and/or EVM itself, this EVM and/or accompanying hardware may or may not be subject to the Federal Communications Commission (FCC) and Industry Canada (IC) rules.

For EVMs **not** subject to the above rules, this evaluation board/kit/module is intended for use for ENGINEERING DEVELOPMENT, DEMONSTRATION OR EVALUATION PURPOSES ONLY and is not considered by TI to be a finished end product fit for general consumer use. It generates, uses, and can radiate radio frequency energy and has not been tested for compliance with the limits of computing devices pursuant to part 15 of FCC or ICES-003 rules, which are designed to provide reasonable protection against radio frequency interference. Operation of the equipment may cause interference with radio communications, in which case the user at his own expense will be required to take whatever measures may be required to correct this interference.

General Statement for EVMs including a radio

User Power/Frequency Use Obligations: This radio is intended for development/professional use only in legally allocated frequency and power limits. Any use of radio frequencies and/or power availability of this EVM and its development application(s) must comply with local laws governing radio spectrum allocation and power limits for this evaluation module. It is the user's sole responsibility to only operate this radio in legally acceptable frequency space and within legally mandated power limitations. Any exceptions to this are strictly prohibited and unauthorized by Texas Instruments unless user has obtained appropriate experimental/development licenses from local regulatory authorities, which is responsibility of user including its acceptable authorization.

For EVMs annotated as FCC – FEDERAL COMMUNICATIONS COMMISSION Part 15 Compliant

Caution

This device complies with part 15 of the FCC Rules. Operation is subject to the following two conditions: (1) This device may not cause harmful interference, and (2) this device must accept any interference received, including interference that may cause undesired operation.

Changes or modifications not expressly approved by the party responsible for compliance could void the user's authority to operate the equipment.

FCC Interference Statement for Class A EVM devices

This equipment has been tested and found to comply with the limits for a Class A digital device, pursuant to part 15 of the FCC Rules. These limits are designed to provide reasonable protection against harmful interference when the equipment is operated in a commercial environment. This equipment generates, uses, and can radiate radio frequency energy and, if not installed and used in accordance with the instruction manual, may cause harmful interference to radio communications. Operation of this equipment in a residential area is likely to cause harmful interference in which case the user will be required to correct the interference at his own expense.

FCC Interference Statement for Class B EVM devices

This equipment has been tested and found to comply with the limits for a Class B digital device, pursuant to part 15 of the FCC Rules. These limits are designed to provide reasonable protection against harmful interference in a residential installation. This equipment generates, uses and can radiate radio frequency energy and, if not installed and used in accordance with the instructions, may cause harmful interference to radio communications. However, there is no guarantee that interference will not occur in a particular installation. If this equipment does cause harmful interference to radio or television reception, which can be determined by turning the equipment off and on, the user is encouraged to try to correct the interference by one or more of the following measures:

- Reorient or relocate the receiving antenna.
- Increase the separation between the equipment and receiver.
- Connect the equipment into an outlet on a circuit different from that to which the receiver is connected.
- Consult the dealer or an experienced radio/TV technician for help.

For EVMs annotated as IC – INDUSTRY CANADA Compliant

This Class A or B digital apparatus complies with Canadian ICES-003.

Changes or modifications not expressly approved by the party responsible for compliance could void the user's authority to operate the equipment.

Concerning EVMs including radio transmitters

This device complies with Industry Canada licence-exempt RSS standard(s). Operation is subject to the following two conditions: (1) this device may not cause interference, and (2) this device must accept any interference, including interference that may cause undesired operation of the device.

Concerning EVMs including detachable antennas

Under Industry Canada regulations, this radio transmitter may only operate using an antenna of a type and maximum (or lesser) gain approved for the transmitter by Industry Canada. To reduce potential radio interference to other users, the antenna type and its gain should be so chosen that the equivalent isotropically radiated power (e.i.r.p.) is not more than that necessary for successful communication.

This radio transmitter has been approved by Industry Canada to operate with the antenna types listed in the user guide with the maximum permissible gain and required antenna impedance for each antenna type indicated. Antenna types not included in this list, having a gain greater than the maximum gain indicated for that type, are strictly prohibited for use with this device.

Cet appareil numérique de la classe A ou B est conforme à la norme NMB-003 du Canada.

Les changements ou les modifications pas expressément approuvés par la partie responsable de la conformité ont pu vider l'autorité de l'utilisateur pour actionner l'équipement.

Concernant les EVMs avec appareils radio

Le présent appareil est conforme aux CNR d'Industrie Canada applicables aux appareils radio exempts de licence. L'exploitation est autorisée aux deux conditions suivantes : (1) l'appareil ne doit pas produire de brouillage, et (2) l'utilisateur de l'appareil doit accepter tout brouillage radioélectrique subi, même si le brouillage est susceptible d'en compromettre le fonctionnement.

Concernant les EVMs avec antennes détachables

Conformément à la réglementation d'Industrie Canada, le présent émetteur radio peut fonctionner avec une antenne d'un type et d'un gain maximal (ou inférieur) approuvé pour l'émetteur par Industrie Canada. Dans le but de réduire les risques de brouillage radioélectrique à l'intention des autres utilisateurs, il faut choisir le type d'antenne et son gain de sorte que la puissance isotrope rayonnée équivalente (p.i.r.e.) ne dépasse pas l'intensité nécessaire à l'établissement d'une communication satisfaisante.

Le présent émetteur radio a été approuvé par Industrie Canada pour fonctionner avec les types d'antenne énumérés dans le manuel d'usage et ayant un gain admissible maximal et l'impédance requise pour chaque type d'antenne. Les types d'antenne non inclus dans cette liste, ou dont le gain est supérieur au gain maximal indiqué, sont strictement interdits pour l'exploitation de l'émetteur.

【Important Notice for Users of this Product in Japan】

This development kit is NOT certified as Confirming to Technical Regulations of Radio Law of Japan

If you use this product in Japan, you are required by Radio Law of Japan to follow the instructions below with respect to this product:

1. Use this product in a shielded room or any other test facility as defined in the notification #173 issued by Ministry of Internal Affairs and Communications on March 28, 2006, based on Sub-section 1.1 of Article 6 of the Ministry's Rule for Enforcement of Radio Law of Japan,
2. Use this product only after you obtained the license of Test Radio Station as provided in Radio Law of Japan with respect to this product, or
3. Use of this product only after you obtained the Technical Regulations Conformity Certification as provided in Radio Law of Japan with respect to this product. Also, please do not transfer this product, unless you give the same notice above to the transferee. Please note that if you could not follow the instructions above, you will be subject to penalties of Radio Law of Japan.

Texas Instruments Japan Limited
(address) 24-1, Nishi-Shinjuku 6 chome, Shinjuku-ku, Tokyo, Japan

http://www.tij.co.jp

【ご使用にあたっての注】

本開発キットは技術基準適合証明を受けておりません。

本製品のご使用に際しては、電波法遵守のため、以下のいずれかの措置を取っていただく必要がありますのでご注意ください。

1. 電波法施行規則第6条第1項第1号に基づく平成18年3月28日総務省告示第173号で定められた電波暗室等の試験設備でご使用いただく。
2. 実験局の免許を取得後ご使用いただく。
3. 技術基準適合証明を取得後ご使用いただく。

なお、本製品は、上記の「ご使用にあたっての注意」を譲渡先、移転先に通知しない限り、譲渡、移転できないものとします。

上記を遵守頂けない場合は、電波法の罰則が適用される可能性があることをご留意ください。

日本テキサス・インスツルメンツ株式会社
東京都新宿区西新宿６丁目２４番１号
西新宿三井ビル
http://www.tij.co.jp

EVALUATION BOARD/KIT/MODULE (EVM)
WARNINGS, RESTRICTIONS AND DISCLAIMERS

For Feasibility Evaluation Only, in Laboratory/Development Environments. Unless otherwise indicated, this EVM is not a finished electrical equipment and not intended for consumer use. It is intended solely for use for preliminary feasibility evaluation in laboratory/development environments by technically qualified electronics experts who are familiar with the dangers and application risks associated with handling electrical mechanical components, systems and subsystems. It should not be used as all or part of a finished end product.

Your Sole Responsibility and Risk. You acknowledge, represent and agree that:

1. You have unique knowledge concerning Federal, State and local regulatory requirements (including but not limited to Food and Drug Administration regulations, if applicable) which relate to your products and which relate to your use (and/or that of your employees, affiliates, contractors or designees) of the EVM for evaluation, testing and other purposes.
2. You have full and exclusive responsibility to assure the safety and compliance of your products with all such laws and other applicable regulatory requirements, and also to assure the safety of any activities to be conducted by you and/or your employees, affiliates, contractors or designees, using the EVM. Further, you are responsible to assure that any interfaces (electronic and/or mechanical) between the EVM and any human body are designed with suitable isolation and means to safely limit accessible leakage currents to minimize the risk of electrical shock hazard.
3. You will employ reasonable safeguards to ensure that your use of the EVM will not result in any property damage, injury or death, even if the EVM should fail to perform as described or expected.
4. You will take care of proper disposal and recycling of the EVM's electronic components and packing materials.

Certain Instructions. It is important to operate this EVM within TI's recommended specifications and environmental considerations per the user guidelines. Exceeding the specified EVM ratings (including but not limited to input and output voltage, current, power, and environmental ranges) may cause property damage, personal injury or death. If there are questions concerning these ratings please contact a TI field representative prior to connecting interface electronics including input power and intended loads. Any loads applied outside of the specified output range may result in unintended and/or inaccurate operation and/or possible permanent damage to the EVM and/or interface electronics. Please consult the EVM User's Guide prior to connecting any load to the EVM output. If there is uncertainty as to the load specification, please contact a TI field representative. During normal operation, some circuit components may have case temperatures greater than 60°C as long as the input and output are maintained at a normal ambient operating temperature. These components include but are not limited to linear regulators, switching transistors, pass transistors, and current sense resistors which can be identified using the EVM schematic located in the EVM User's Guide. When placing measurement probes near these devices during normal operation, please be aware that these devices may be very warm to the touch. As with all electronic evaluation tools, only qualified personnel knowledgeable in electronic measurement and diagnostics normally found in development environments should use these EVMs.

Agreement to Defend, Indemnify and Hold Harmless. You agree to defend, indemnify and hold TI, its licensors and their representatives harmless from and against any and all claims, damages, losses, expenses, costs and liabilities (collectively, "Claims") arising out of or in connection with any use of the EVM that is not in accordance with the terms of the agreement. This obligation shall apply whether Claims arise under law of tort or contract or any other legal theory, and even if the EVM fails to perform as described or expected.

Safety-Critical or Life-Critical Applications. If you intend to evaluate the components for possible use in safety critical applications (such as life support) where a failure of the TI product would reasonably be expected to cause severe personal injury or death, such as devices which are classified as FDA Class III or similar classification, then you must specifically notify TI of such intent and enter into a separate Assurance and Indemnity Agreement.

Mailing Address: Texas Instruments, Post Office Box 655303, Dallas, Texas 75265
Copyright © 2012, Texas Instruments Incorporated

IMPORTANT NOTICE

Texas Instruments Incorporated and its subsidiaries (TI) reserve the right to make corrections, enhancements, improvements and other changes to its semiconductor products and services per JESD46, latest issue, and to discontinue any product or service per JESD48, latest issue. Buyers should obtain the latest relevant information before placing orders and should verify that such information is current and complete. All semiconductor products (also referred to herein as “components”) are sold subject to TI’s terms and conditions of sale supplied at the time of order acknowledgment.

TI warrants performance of its components to the specifications applicable at the time of sale, in accordance with the warranty in TI’s terms and conditions of sale of semiconductor products. Testing and other quality control techniques are used to the extent TI deems necessary to support this warranty. Except where mandated by applicable law, testing of all parameters of each component is not necessarily performed.

TI assumes no liability for applications assistance or the design of Buyers’ products. Buyers are responsible for their products and applications using TI components. To minimize the risks associated with Buyers’ products and applications, Buyers should provide adequate design and operating safeguards.

TI does not warrant or represent that any license, either express or implied, is granted under any patent right, copyright, mask work right, or other intellectual property right relating to any combination, machine, or process in which TI components or services are used. Information published by TI regarding third-party products or services does not constitute a license to use such products or services or a warranty or endorsement thereof. Use of such information may require a license from a third party under the patents or other intellectual property of the third party, or a license from TI under the patents or other intellectual property of TI.

Reproduction of significant portions of TI information in TI data books or data sheets is permissible only if reproduction is without alteration and is accompanied by all associated warranties, conditions, limitations, and notices. TI is not responsible or liable for such altered documentation. Information of third parties may be subject to additional restrictions.

Resale of TI components or services with statements different from or beyond the parameters stated by TI for that component or service voids all express and any implied warranties for the associated TI component or service and is an unfair and deceptive business practice. TI is not responsible or liable for any such statements.

Buyer acknowledges and agrees that it is solely responsible for compliance with all legal, regulatory and safety-related requirements concerning its products, and any use of TI components in its applications, notwithstanding any applications-related information or support that may be provided by TI. Buyer represents and agrees that it has all the necessary expertise to create and implement safeguards which anticipate dangerous consequences of failures, monitor failures and their consequences, lessen the likelihood of failures that might cause harm and take appropriate remedial actions. Buyer will fully indemnify TI and its representatives against any damages arising out of the use of any TI components in safety-critical applications.

In some cases, TI components may be promoted specifically to facilitate safety-related applications. With such components, TI’s goal is to help enable customers to design and create their own end-product solutions that meet applicable functional safety standards and requirements. Nonetheless, such components are subject to these terms.

No TI components are authorized for use in FDA Class III (or similar life-critical medical equipment) unless authorized officers of the parties have executed a special agreement specifically governing such use.

Only those TI components which TI has specifically designated as military grade or “enhanced plastic” are designed and intended for use in military/aerospace applications or environments. Buyer acknowledges and agrees that any military or aerospace use of TI components which have ***not*** been so designated is solely at the Buyer's risk, and that Buyer is solely responsible for compliance with all legal and regulatory requirements in connection with such use.

TI has specifically designated certain components which meet ISO/TS16949 requirements, mainly for automotive use. Components which have not been so designated are neither designed nor intended for automotive use; and TI will not be responsible for any failure of such components to meet such requirements.

Products		**Applications**	
Audio	www.ti.com/audio	Automotive and Transportation	www.ti.com/automotive
Amplifiers	amplifier.ti.com	Communications and Telecom	www.ti.com/communications
Data Converters	dataconverter.ti.com	Computers and Peripherals	www.ti.com/computers
DLP® Products	www.dlp.com	Consumer Electronics	www.ti.com/consumer-apps
DSP	dsp.ti.com	Energy and Lighting	www.ti.com/energy
Clocks and Timers	www.ti.com/clocks	Industrial	www.ti.com/industrial
Interface	interface.ti.com	Medical	www.ti.com/medical
Logic	logic.ti.com	Security	www.ti.com/security
Power Mgmt	power.ti.com	Space, Avionics and Defense	www.ti.com/space-avionics-defense
Microcontrollers	microcontroller.ti.com	Video and Imaging	www.ti.com/video
RFID	www.ti-rfid.com		
OMAP Applications Processors	www.ti.com/omap	**TI E2E Community**	e2e.ti.com
Wireless Connectivity	www.ti.com/wirelessconnectivity		

Mailing Address: Texas Instruments, Post Office Box 655303, Dallas, Texas 75265
Copyright © 2012, Texas Instruments Incorporated