Using the TPS22930AEVM-027 Single Channel Load Switch IC

The TPS22930AEVM-027 evaluation module (EVM) allows the user to connect power to and control the Ultra Small CSP-4 package load switch. Parameters such as On State resistance, Slew Rate and Discharge properties can be easily evaluated.

Contents

1 Introduction 2
2 Description 2
2.1 Typical Applications 2
2.2 Features 2
3 Electrical Performance 3
4 Operation 3
4.1 Equipment 3
4.2 Setup 3
5 Operation 4
6 Test Configurations 5
6.1 On State Resistance (r_{ON}) Test Setup 5
6.2 Slew Rate Test Setup 6
6.3 VOUT Slew Rate Example 7
7 Layout 9
7.1 Assembly 9
7.2 Top Side 9
7.3 Bottom Side 10
8 Schematic 11
9 Bill of Materials 11

List of Figures

1 r_{ON} Setup 5
2 Slew Rate Setup 6
3 Trise TPS22930A Example 7
4 Tfall TPS22930A Example 8

List of Tables

1 TPS22930A VOUT Rise Time, Enable, and Output Discharge Options 2
2 TPS22930AEVM-027 Electrical Performance 3
3 Bill of Materials 11

Copyright © 2012, Texas Instruments Incorporated

1 Introduction

Table 1. TPS22930A VOUT Rise Time, Enable, and Output Discharge Options

EVM	Device	Rise Time (µs) Typical	VIN (V)	Max. Continuous Current	Enable (ON Pin)	Quick Output Discharge
HVL027	TPS22930A	6	4.2	2-A	Active High	No

2 Description

The TPS22930A is a small, low R_{ON} load switch with controlled turn on. The device contains a µP-channel MOSFET that can operate over an input voltage range of 1.4 V to 5.5 V. The switch is controlled by an on/off input (ON), which is capable of interfacing directly with low-voltage control signals. The TPS22930A is active high enable.

2.1 Typical Applications

- Battery Powered Equipment
- Portable Industrial Equipment
- Portable Medical Equipment
- Portable Media Players
- Smart phones / Tablets
- Digital Cameras
- GPS Devices

2.2 Features

- Ultra Low On State Resistance
- 2A Maximum Continuous Switch Current
- Controlled Slew Rate to Avoid Inrush Currents

Copyright © 2012, Texas Instruments Incorporated

3 Electrical Performance

Table 2. TPS22930AEVM-027 Electrical Performance

PARAMETER		TEST CONDITIONS	T_A	MIN	TYP	MAX	UNIT
I_{IN}	Quiescent current	I_{OUT} = 0, V_{IN} = V_{ON}	Full		8	20	µA
I_{IN}(off)	Off supply current	V_{ON} = GND, V_{OUT} = Open	Full		0.6	3.5	µA
I_{IN}(Leakage)	Leakage current	V_{ON} = GND, V_{OUT} = 0	Full		0.6	3.5	µA
r_{ON}	On-resistance	V_{IN} = 5.5 V, I_{OUT} = –200 mA	25°C		31.7		mΩ
			Full			40.8	
		V_{IN} = 5.0 V, I_{OUT} = –200 mA	25°C		31.9		mΩ
			Full			41.1	
		VIN = 4.2 V, I_{OUT} = –200 mA	25°C		32.2		mΩ
			Full			41.6	
		VIN = 3.3 V, I_{OUT} = –200 mA	25°C		33		mΩ
			Full			42.5	
		VIN = 2.5 V , I_{OUT} = –200 mA	25°C		35.4		mΩ
			Full			44.8	
		VIN = 1.8 V, I_{OUT} = –200 mA	25°C		45.2		mΩ
			Full			58.3	
		VIN = 1.5 V, I_{OUT} = –200 mA	25°C		54.4		mΩ
			Full			71.1	
UVLO	Under voltage lock out	V_{IN} increasing, V– = 0 V, I_{OUT} = –100 mA	Full			1.2	V
		$_{VIN}$ decreasing, V– = 0 V, R_L = 10 Ω	Full	0.5			V
I_{ON}	ON input leakage current	V_{ON} = 1.4 V to 5.5 V or GND	Full			1	µA
V_{RVP}	Reverse current voltage threshold				44		mV
t_{DELAY}	Reverse current response delay	VIN = 5 V			10		µs

4 Operation

4.1 Equipment

Voltage Sources:

- DC supply will be used.
  - DC Supply capable of minimum of 10V, 3A.

Multimeters:

- Multi Meter for measuring switch voltage drop and VOUT voltage.

Output Load:

- Variable load connected to VOUT, observe power rating,

Oscilloscope:

- 2 channel 100MHz

Recommended Wire Gauge: 18 AWG

4.2 Setup

This section describes the jumpers and connectors on the EVM as well as how to properly connect, set up, and use the EVM.

4.2.1 J1/J3 – Input Connections

This is the connection for the leads from the input source. Connect the positive lead to VIN J1, and the negative lead connection to GND J3.

Copyright © 2012, Texas Instruments Incorporated

4.2.2 J4/J6 – Output Connections

This is the connection for the output of the EVM. Connect the positive connection of the load to VOUT J4, and the negative connection to GND J6.

4.2.3 JP3 – ON

This is the enable input for the device. A shorting jumper must be installed on JP3 in either the High or Low Position. The TPS22907 and TPS22908 are active High. ON must not be left floating. An external enable source can be applied to the EVM by removing the shunt and connecting a signal to the center pin of J3. Refer to the datasheet for proper ON and OFF voltage level settings. A switching signal may also be used and connected at this point.

4.2.4 J2/J5 - VIN Sense and VOUT Sense

These two connections are used when very accurate measurements of the input or output voltage are required. rON measurements should be made using these sense connections when measuring the voltage drop from VIN to VOUT and then calculating the resistance.

4.2.5 JP1/JP2 – Input Capacitors

During normal operation a shorting jumper is placed on JP2 and connects C2 capacitor from the input of the device to ground. JP1 and C1 may be used to connect a user selected capacitor value from the input of the device to ground. Refer to the Applications Section of the Datasheet for additional information on selecting the input capacitors.

4.2.6 JP4/JP5 – Output Capacitors

JP4 and JP5 may be used to connect a user selected capacitor value from the output of the device to ground. Refer to the Applications Section of the Datasheet for additional information on selecting the output capacitors.

4.2.7 JP6/JP7 – Output Resistors

During normal operation no shorting jumper is placed on JP6 or JP7. A shorting jumper may be used on JP6 to connect R1 load resistor from the output of the device to ground. JP7 may be used to connect R2 load resistor from the output to ground. R1 and R2 are sized for 1210 1/2W power rated resistors.

5 Operation

Connect the positive input of the power supply to VIN at J1 and the negative lead of the power supply to GND at J3. The input voltage range of the TPS22930AEVM-027 is 1.4V to 5.5V.

Output loads can be applied by connecting between J4 VOUT and J6 GND. The TPS22930AEVM-027 is rated for a maximum continuous current of 2A. Configure JP3 as required. JP3 must be installed for proper operation. When the ON pin is asserted the TPS22930A device will control the slew rate of VOUT. The slew rate of the device is internally controlled to avoid inrush current.

Copyright © 2012, Texas Instruments Incorporated

6 Test Configurations

6.1 On State Resistance (r_{ON}) Test Setup

Figure 1 shows a typical setup for measuring On State Resistance. The voltage drop across the switch is measured using the sense connections then divided by the current into the load yielding the r_{ON} resistance.

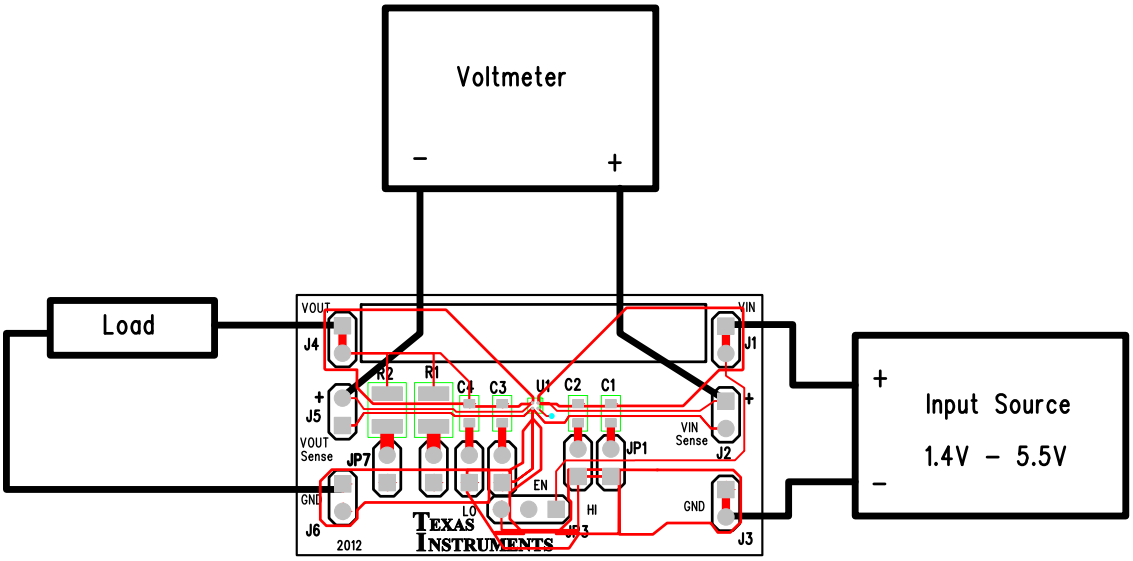

Figure 1. r_{ON} Setup

Copyright © 2012, Texas Instruments Incorporated

6.2 Slew Rate Test Setup

Figure 2 shows a test setup for measuring the Slew Rate of the Load Switch. Controlling the ON pin of the switch with a signal source and then measuring the output with a scope shows the switches ability to avoid inrush current.

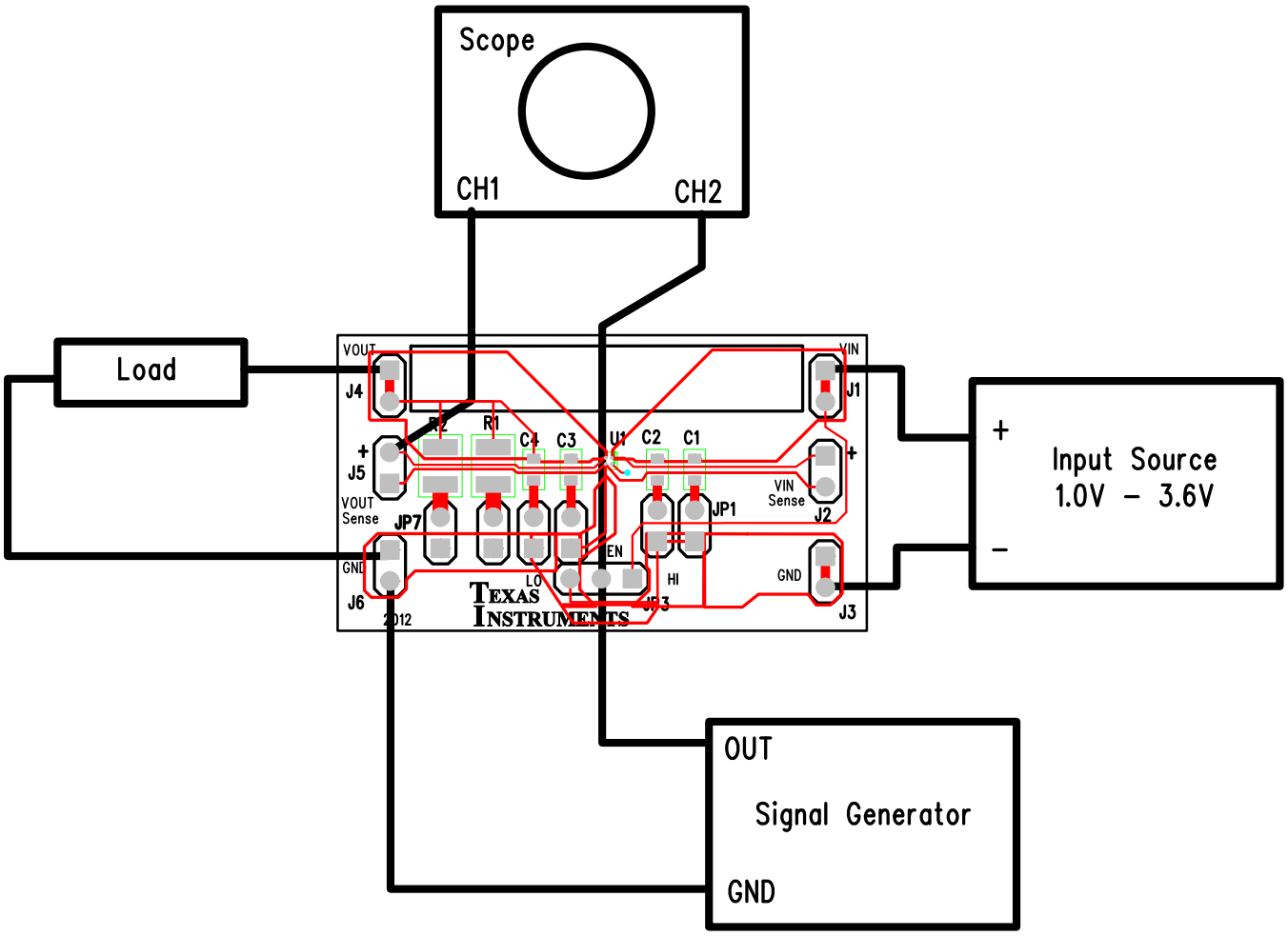

Figure 2. Slew Rate Setup

Copyright © 2012, Texas Instruments Incorporated

6.3 VOUT Slew Rate Example

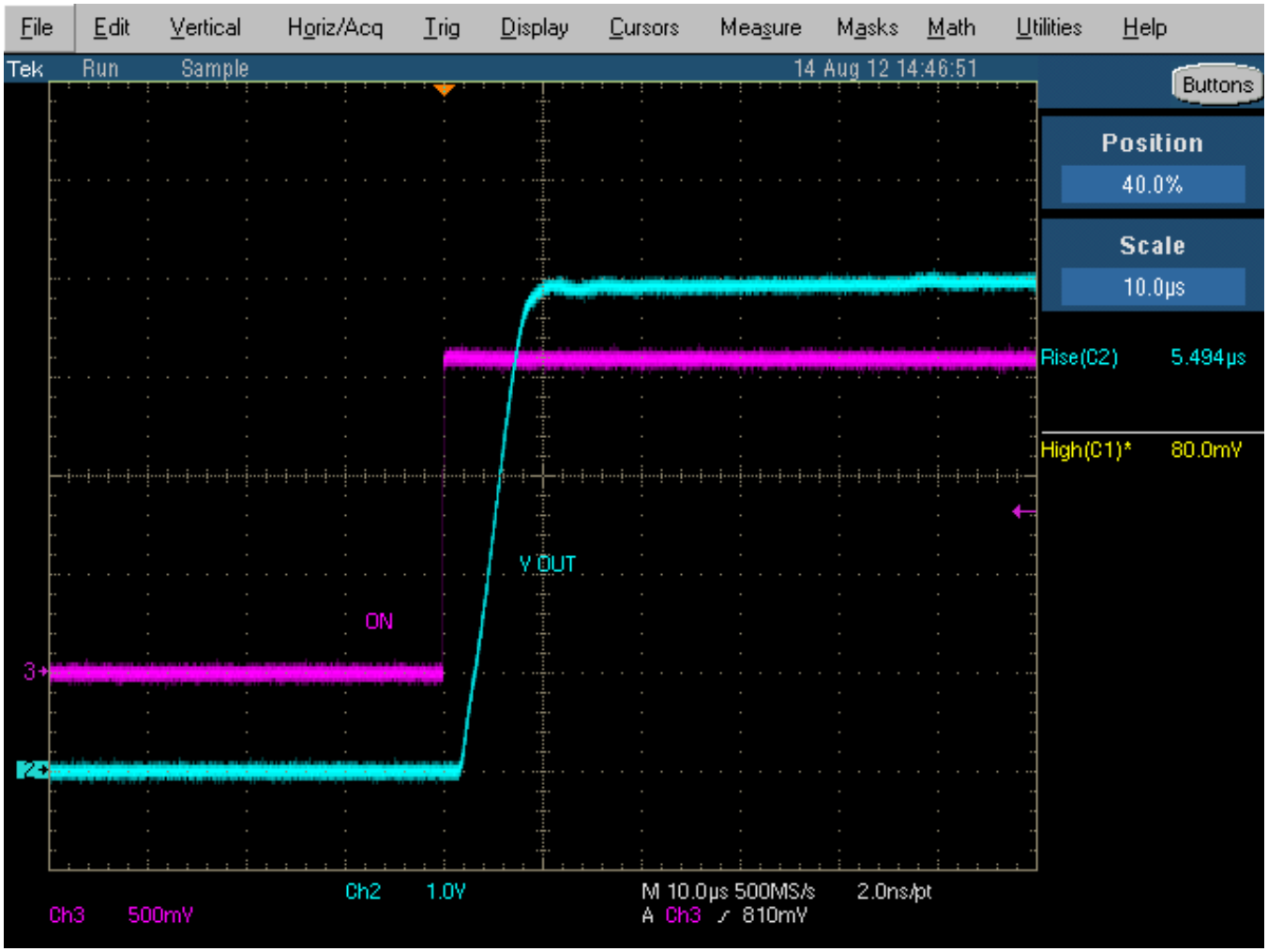

Figure 3. Trise TPS22930A Example

Copyright © 2012, Texas Instruments Incorporated

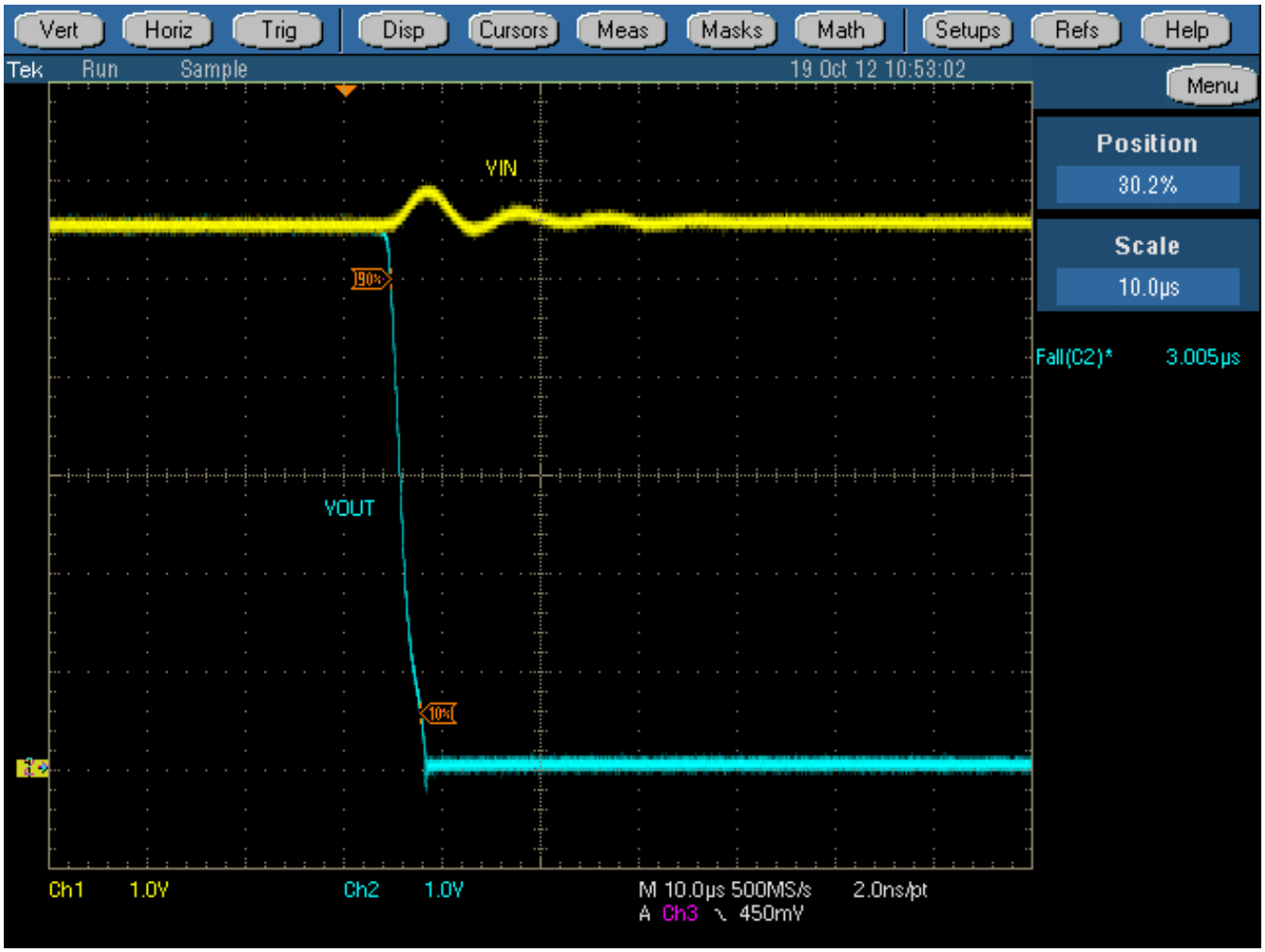

Figure 4. Tfall TPS22930A Example

Copyright © 2012, Texas Instruments Incorporated

7 Layout

7.1 Assembly

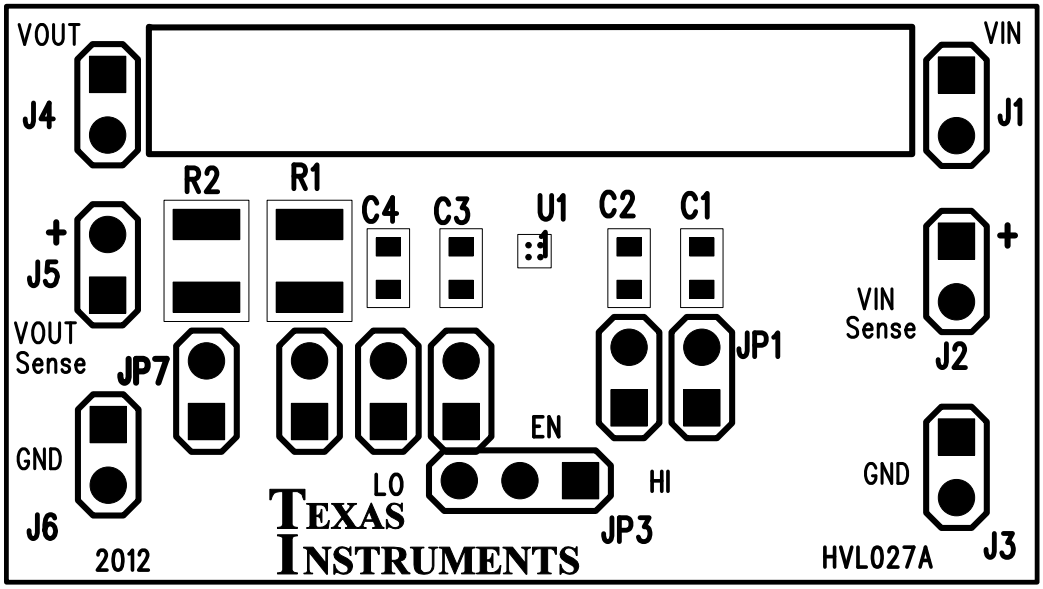

7.2 Top Side

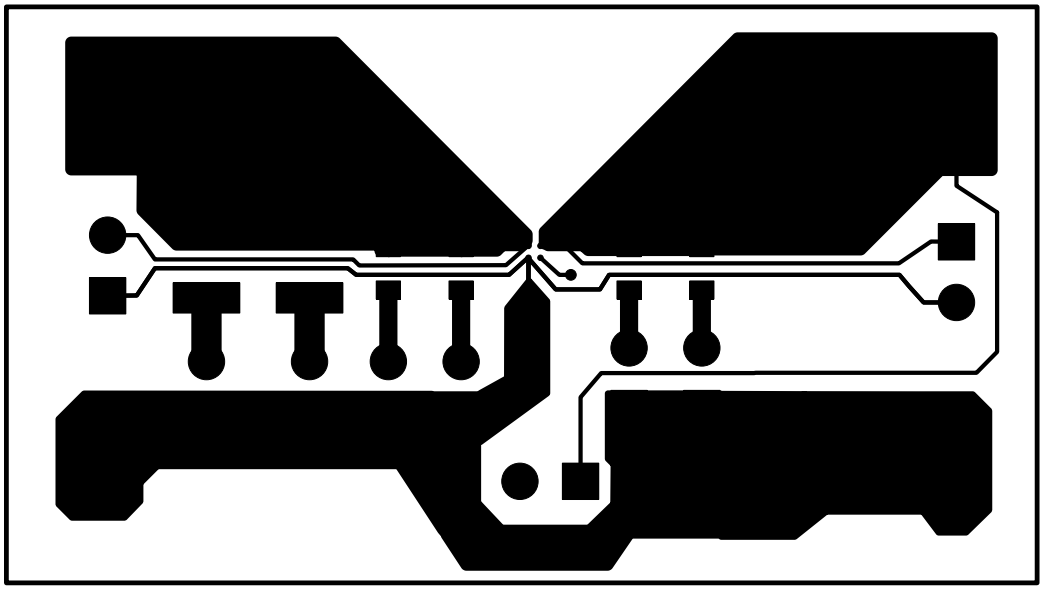

Copyright © 2012, Texas Instruments Incorporated

7.3 Bottom Side

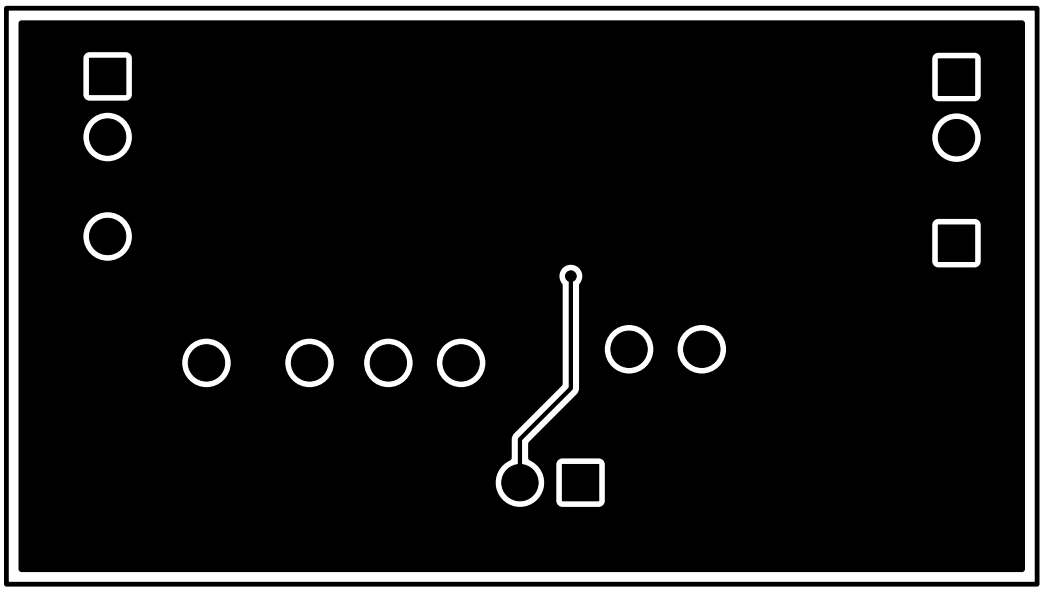

Copyright © 2012, Texas Instruments Incorporated

8 Schematic

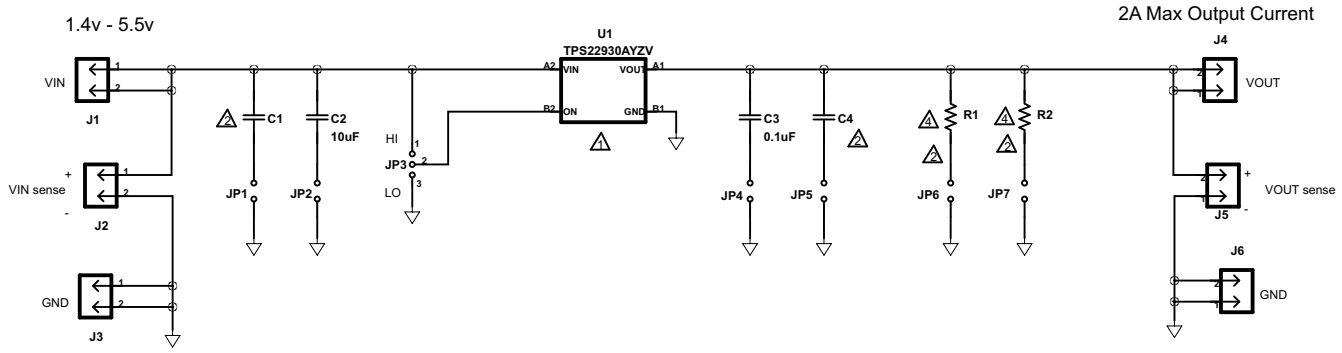

1 See BOM for part number

2 Not Installed

3 Observe 1/2W Rating on these components

9 Bill of Materials

Table 3. Bill of Materials

Count	RefDes	Value	Description	Size	Part Number	MFR
1	—		PCB, 0.9 In x 1.7 In x 0.062 In		HVL027	Any
0	C3	0.1uF	Capacitor, Ceramic, 16-V, X7R,10%	603	Std	Std
1	C2	10uF	Capacitor, Ceramic, 10-V, X5R,20%	603	Std	Std
0	C1, C4	OPEN	Capacitor, Ceramic	603	Std	Std
0	R1	OPEN	Resistor, Chip 1/2W 5%	1210	Std	Std
0	R2	OPEN	Resistor, Chip 1/2W 5%	1210	Std	Std
12	J1-J6, JP1-2, JP4-7	PEC02SAAN	Header, 2pin, 100mil spacing	0.100 inch x 2	PEC02SAAN	Sullins
1	JP3	PEC03SAAN	Header, 3pin, 100mil spacing	0.100 inch x 3	PEC03SAAN	Sullins
1	U1	TPS22930AYZV	IC, Single Chip,Current-Limited Load Switch with Controlled Turn On	YZV	TPS22930AYZV	TI
1	—	—	Label (See note 5)	1.25 x 0.25 inch	THT-13-457-10	Brady
1	NA	NA	Shunt, 100-mil, Black	0.100	929950-00	3M

Notes:

1. These assemblies are ESD sensitive, ESD precautions shall be observed.
2. These assemblies must be clean and free from flux and all contaminants. Use of no clean flux is not acceptable.
3. These assemblies must comply with workmanship standards IPC-A-610 Class 2.
4. Ref designators marked with an asterisk ('**') cannot be substituted. All other components can be substituted with equivalent MFG's components.
5. Install label in silkscreened box after final wash. Text shall be 8 pt font. Text shall be per Table 1.

Table 1

Assembly No.	Text
HVL027	TPS22930AEVM -027

Copyright © 2012, Texas Instruments Incorporated

EVALUATION BOARD/KIT/MODULE (EVM) ADDITIONAL TERMS

Texas Instruments (TI) provides the enclosed Evaluation Board/Kit/Module (EVM) under the following conditions:

The user assumes all responsibility and liability for proper and safe handling of the goods. Further, the user indemnifies TI from all claims arising from the handling or use of the goods.

Should this evaluation board/kit not meet the specifications indicated in the User's Guide, the board/kit may be returned within 30 days from the date of delivery for a full refund. THE FOREGOING LIMITED WARRANTY IS THE EXCLUSIVE WARRANTY MADE BY SELLER TO BUYER AND IS IN LIEU OF ALL OTHER WARRANTIES, EXPRESSED, IMPLIED, OR STATUTORY, INCLUDING ANY WARRANTY OF MERCHANTABILITY OR FITNESS FOR ANY PARTICULAR PURPOSE. EXCEPT TO THE EXTENT OF THE INDEMNITY SET FORTH ABOVE, NEITHER PARTY SHALL BE LIABLE TO THE OTHER FOR ANY INDIRECT, SPECIAL, INCIDENTAL, OR CONSEQUENTIAL DAMAGES.

Please read the User's Guide and, specifically, the Warnings and Restrictions notice in the User's Guide prior to handling the product. This notice contains important safety information about temperatures and voltages. For additional information on TI's environmental and/or safety programs, please visit www.ti.com/esh or contact TI.

No license is granted under any patent right or other intellectual property right of TI covering or relating to any machine, process, or combination in which such TI products or services might be or are used. TI currently deals with a variety of customers for products, and therefore our arrangement with the user is not exclusive. TI assumes no liability for applications assistance, customer product design, software performance, or infringement of patents or services described herein.

REGULATORY COMPLIANCE INFORMATION

As noted in the EVM User's Guide and/or EVM itself, this EVM and/or accompanying hardware may or may not be subject to the Federal Communications Commission (FCC) and Industry Canada (IC) rules.

For EVMs **not** subject to the above rules, this evaluation board/kit/module is intended for use for ENGINEERING DEVELOPMENT, DEMONSTRATION OR EVALUATION PURPOSES ONLY and is not considered by TI to be a finished end product fit for general consumer use. It generates, uses, and can radiate radio frequency energy and has not been tested for compliance with the limits of computing devices pursuant to part 15 of FCC or ICES-003 rules, which are designed to provide reasonable protection against radio frequency interference. Operation of the equipment may cause interference with radio communications, in which case the user at his own expense will be required to take whatever measures may be required to correct this interference.

General Statement for EVMs including a radio

User Power/Frequency Use Obligations: This radio is intended for development/professional use only in legally allocated frequency and power limits. Any use of radio frequencies and/or power availability of this EVM and its development application(s) must comply with local laws governing radio spectrum allocation and power limits for this evaluation module. It is the user's sole responsibility to only operate this radio in legally acceptable frequency space and within legally mandated power limitations. Any exceptions to this are strictly prohibited and unauthorized by Texas Instruments unless user has obtained appropriate experimental/development licenses from local regulatory authorities, which is responsibility of user including its acceptable authorization.

For EVMs annotated as FCC – FEDERAL COMMUNICATIONS COMMISSION Part 15 Compliant

Caution

This device complies with part 15 of the FCC Rules. Operation is subject to the following two conditions: (1) This device may not cause harmful interference, and (2) this device must accept any interference received, including interference that may cause undesired operation.

Changes or modifications not expressly approved by the party responsible for compliance could void the user's authority to operate the equipment.

FCC Interference Statement for Class A EVM devices

This equipment has been tested and found to comply with the limits for a Class A digital device, pursuant to part 15 of the FCC Rules. These limits are designed to provide reasonable protection against harmful interference when the equipment is operated in a commercial environment. This equipment generates, uses, and can radiate radio frequency energy and, if not installed and used in accordance with the instruction manual, may cause harmful interference to radio communications. Operation of this equipment in a residential area is likely to cause harmful interference in which case the user will be required to correct the interference at his own expense.

FCC Interference Statement for Class B EVM devices

This equipment has been tested and found to comply with the limits for a Class B digital device, pursuant to part 15 of the FCC Rules. These limits are designed to provide reasonable protection against harmful interference in a residential installation. This equipment generates, uses and can radiate radio frequency energy and, if not installed and used in accordance with the instructions, may cause harmful interference to radio communications. However, there is no guarantee that interference will not occur in a particular installation. If this equipment does cause harmful interference to radio or television reception, which can be determined by turning the equipment off and on, the user is encouraged to try to correct the interference by one or more of the following measures:

- Reorient or relocate the receiving antenna.
- Increase the separation between the equipment and receiver.
- Connect the equipment into an outlet on a circuit different from that to which the receiver is connected.
- Consult the dealer or an experienced radio/TV technician for help.

For EVMs annotated as IC – INDUSTRY CANADA Compliant

This Class A or B digital apparatus complies with Canadian ICES-003.

Changes or modifications not expressly approved by the party responsible for compliance could void the user's authority to operate the equipment.

Concerning EVMs including radio transmitters

This device complies with Industry Canada licence-exempt RSS standard(s). Operation is subject to the following two conditions: (1) this device may not cause interference, and (2) this device must accept any interference, including interference that may cause undesired operation of the device.

Concerning EVMs including detachable antennas

Under Industry Canada regulations, this radio transmitter may only operate using an antenna of a type and maximum (or lesser) gain approved for the transmitter by Industry Canada. To reduce potential radio interference to other users, the antenna type and its gain should be so chosen that the equivalent isotropically radiated power (e.i.r.p.) is not more than that necessary for successful communication.

This radio transmitter has been approved by Industry Canada to operate with the antenna types listed in the user guide with the maximum permissible gain and required antenna impedance for each antenna type indicated. Antenna types not included in this list, having a gain greater than the maximum gain indicated for that type, are strictly prohibited for use with this device.

Cet appareil numérique de la classe A ou B est conforme à la norme NMB-003 du Canada.

Les changements ou les modifications pas expressément approuvés par la partie responsable de la conformité ont pu vider l'autorité de l'utilisateur pour actionner l'équipement.

Concernant les EVMs avec appareils radio

Le présent appareil est conforme aux CNR d'Industrie Canada applicables aux appareils radio exempts de licence. L'exploitation est autorisée aux deux conditions suivantes : (1) l'appareil ne doit pas produire de brouillage, et (2) l'utilisateur de l'appareil doit accepter tout brouillage radioélectrique subi, même si le brouillage est susceptible d'en compromettre le fonctionnement.

Concernant les EVMs avec antennes détachables

Conformément à la réglementation d'Industrie Canada, le présent émetteur radio peut fonctionner avec une antenne d'un type et d'un gain maximal (ou inférieur) approuvé pour l'émetteur par Industrie Canada. Dans le but de réduire les risques de brouillage radioélectrique à l'intention des autres utilisateurs, il faut choisir le type d'antenne et son gain de sorte que la puissance isotrope rayonnée équivalente (p.i.r.e.) ne dépasse pas l'intensité nécessaire à l'établissement d'une communication satisfaisante.

Le présent émetteur radio a été approuvé par Industrie Canada pour fonctionner avec les types d'antenne énumérés dans le manuel d'usage et ayant un gain admissible maximal et l'impédance requise pour chaque type d'antenne. Les types d'antenne non inclus dans cette liste, ou dont le gain est supérieur au gain maximal indiqué, sont strictement interdits pour l'exploitation de l'émetteur.

【Important Notice for Users of this Product in Japan】

This development kit is NOT certified as Confirming to Technical Regulations of Radio Law of Japan

If you use this product in Japan, you are required by Radio Law of Japan to follow the instructions below with respect to this product:

1. Use this product in a shielded room or any other test facility as defined in the notification #173 issued by Ministry of Internal Affairs and Communications on March 28, 2006, based on Sub-section 1.1 of Article 6 of the Ministry's Rule for Enforcement of Radio Law of Japan,
2. Use this product only after you obtained the license of Test Radio Station as provided in Radio Law of Japan with respect to this product, or
3. Use of this product only after you obtained the Technical Regulations Conformity Certification as provided in Radio Law of Japan with respect to this product. Also, please do not transfer this product, unless you give the same notice above to the transferee. Please note that if you could not follow the instructions above, you will be subject to penalties of Radio Law of Japan.

Texas Instruments Japan Limited
(address) 24-1, Nishi-Shinjuku 6 chome, Shinjuku-ku, Tokyo, Japan

http://www.tij.co.jp

【ご使用にあたっての注】

本開発キットは技術基準適合証明を受けておりません。

本製品のご使用に際しては、電波法遵守のため、以下のいずれかの措置を取っていただく必要がありますのでご注意ください。

1. 電波法施行規則第6条第1項第1号に基づく平成18年3月28日総務省告示第173号で定められた電波暗室等の試験設備でご使用いただく。
2. 実験局の免許を取得後ご使用いただく。
3. 技術基準適合証明を取得後ご使用いただく。

なお、本製品は、上記の「ご使用にあたっての注意」を譲渡先、移転先に通知しない限り、譲渡、移転できないものとします。

上記を遵守頂けない場合は、電波法の罰則が適用される可能性があることをご留意ください。

日本テキサス・インスツルメンツ株式会社
東京都新宿区西新宿６丁目２４番１号
西新宿三井ビル
http://www.tij.co.jp

EVALUATION BOARD/KIT/MODULE (EVM)
WARNINGS, RESTRICTIONS AND DISCLAIMERS

For Feasibility Evaluation Only, in Laboratory/Development Environments. Unless otherwise indicated, this EVM is not a finished electrical equipment and not intended for consumer use. It is intended solely for use for preliminary feasibility evaluation in laboratory/development environments by technically qualified electronics experts who are familiar with the dangers and application risks associated with handling electrical mechanical components, systems and subsystems. It should not be used as all or part of a finished end product.

Your Sole Responsibility and Risk. You acknowledge, represent and agree that:

1. You have unique knowledge concerning Federal, State and local regulatory requirements (including but not limited to Food and Drug Administration regulations, if applicable) which relate to your products and which relate to your use (and/or that of your employees, affiliates, contractors or designees) of the EVM for evaluation, testing and other purposes.
2. You have full and exclusive responsibility to assure the safety and compliance of your products with all such laws and other applicable regulatory requirements, and also to assure the safety of any activities to be conducted by you and/or your employees, affiliates, contractors or designees, using the EVM. Further, you are responsible to assure that any interfaces (electronic and/or mechanical) between the EVM and any human body are designed with suitable isolation and means to safely limit accessible leakage currents to minimize the risk of electrical shock hazard.
3. You will employ reasonable safeguards to ensure that your use of the EVM will not result in any property damage, injury or death, even if the EVM should fail to perform as described or expected.
4. You will take care of proper disposal and recycling of the EVM's electronic components and packing materials.

Certain Instructions. It is important to operate this EVM within TI's recommended specifications and environmental considerations per the user guidelines. Exceeding the specified EVM ratings (including but not limited to input and output voltage, current, power, and environmental ranges) may cause property damage, personal injury or death. If there are questions concerning these ratings please contact a TI field representative prior to connecting interface electronics including input power and intended loads. Any loads applied outside of the specified output range may result in unintended and/or inaccurate operation and/or possible permanent damage to the EVM and/or interface electronics. Please consult the EVM User's Guide prior to connecting any load to the EVM output. If there is uncertainty as to the load specification, please contact a TI field representative. During normal operation, some circuit components may have case temperatures greater than 60°C as long as the input and output are maintained at a normal ambient operating temperature. These components include but are not limited to linear regulators, switching transistors, pass transistors, and current sense resistors which can be identified using the EVM schematic located in the EVM User's Guide. When placing measurement probes near these devices during normal operation, please be aware that these devices may be very warm to the touch. As with all electronic evaluation tools, only qualified personnel knowledgeable in electronic measurement and diagnostics normally found in development environments should use these EVMs.

Agreement to Defend, Indemnify and Hold Harmless. You agree to defend, indemnify and hold TI, its licensors and their representatives harmless from and against any and all claims, damages, losses, expenses, costs and liabilities (collectively, "Claims") arising out of or in connection with any use of the EVM that is not in accordance with the terms of the agreement. This obligation shall apply whether Claims arise under law of tort or contract or any other legal theory, and even if the EVM fails to perform as described or expected.

Safety-Critical or Life-Critical Applications. If you intend to evaluate the components for possible use in safety critical applications (such as life support) where a failure of the TI product would reasonably be expected to cause severe personal injury or death, such as devices which are classified as FDA Class III or similar classification, then you must specifically notify TI of such intent and enter into a separate Assurance and Indemnity Agreement.

Mailing Address: Texas Instruments, Post Office Box 655303, Dallas, Texas 75265
Copyright © 2012, Texas Instruments Incorporated

IMPORTANT NOTICE

Texas Instruments Incorporated and its subsidiaries (TI) reserve the right to make corrections, enhancements, improvements and other changes to its semiconductor products and services per JESD46, latest issue, and to discontinue any product or service per JESD48, latest issue. Buyers should obtain the latest relevant information before placing orders and should verify that such information is current and complete. All semiconductor products (also referred to herein as “components”) are sold subject to TI’s terms and conditions of sale supplied at the time of order acknowledgment.

TI warrants performance of its components to the specifications applicable at the time of sale, in accordance with the warranty in TI’s terms and conditions of sale of semiconductor products. Testing and other quality control techniques are used to the extent TI deems necessary to support this warranty. Except where mandated by applicable law, testing of all parameters of each component is not necessarily performed.

TI assumes no liability for applications assistance or the design of Buyers’ products. Buyers are responsible for their products and applications using TI components. To minimize the risks associated with Buyers’ products and applications, Buyers should provide adequate design and operating safeguards.

TI does not warrant or represent that any license, either express or implied, is granted under any patent right, copyright, mask work right, or other intellectual property right relating to any combination, machine, or process in which TI components or services are used. Information published by TI regarding third-party products or services does not constitute a license to use such products or services or a warranty or endorsement thereof. Use of such information may require a license from a third party under the patents or other intellectual property of the third party, or a license from TI under the patents or other intellectual property of TI.

Reproduction of significant portions of TI information in TI data books or data sheets is permissible only if reproduction is without alteration and is accompanied by all associated warranties, conditions, limitations, and notices. TI is not responsible or liable for such altered documentation. Information of third parties may be subject to additional restrictions.

Resale of TI components or services with statements different from or beyond the parameters stated by TI for that component or service voids all express and any implied warranties for the associated TI component or service and is an unfair and deceptive business practice. TI is not responsible or liable for any such statements.

Buyer acknowledges and agrees that it is solely responsible for compliance with all legal, regulatory and safety-related requirements concerning its products, and any use of TI components in its applications, notwithstanding any applications-related information or support that may be provided by TI. Buyer represents and agrees that it has all the necessary expertise to create and implement safeguards which anticipate dangerous consequences of failures, monitor failures and their consequences, lessen the likelihood of failures that might cause harm and take appropriate remedial actions. Buyer will fully indemnify TI and its representatives against any damages arising out of the use of any TI components in safety-critical applications.

In some cases, TI components may be promoted specifically to facilitate safety-related applications. With such components, TI’s goal is to help enable customers to design and create their own end-product solutions that meet applicable functional safety standards and requirements. Nonetheless, such components are subject to these terms.

No TI components are authorized for use in FDA Class III (or similar life-critical medical equipment) unless authorized officers of the parties have executed a special agreement specifically governing such use.

Only those TI components which TI has specifically designated as military grade or “enhanced plastic” are designed and intended for use in military/aerospace applications or environments. Buyer acknowledges and agrees that any military or aerospace use of TI components which have ***not*** been so designated is solely at the Buyer's risk, and that Buyer is solely responsible for compliance with all legal and regulatory requirements in connection with such use.

TI has specifically designated certain components which meet ISO/TS16949 requirements, mainly for automotive use. Components which have not been so designated are neither designed nor intended for automotive use; and TI will not be responsible for any failure of such components to meet such requirements.

Products		**Applications**	
Audio	www.ti.com/audio	Automotive and Transportation	www.ti.com/automotive
Amplifiers	amplifier.ti.com	Communications and Telecom	www.ti.com/communications
Data Converters	dataconverter.ti.com	Computers and Peripherals	www.ti.com/computers
DLP® Products	www.dlp.com	Consumer Electronics	www.ti.com/consumer-apps
DSP	dsp.ti.com	Energy and Lighting	www.ti.com/energy
Clocks and Timers	www.ti.com/clocks	Industrial	www.ti.com/industrial
Interface	interface.ti.com	Medical	www.ti.com/medical
Logic	logic.ti.com	Security	www.ti.com/security
Power Mgmt	power.ti.com	Space, Avionics and Defense	www.ti.com/space-avionics-defense
Microcontrollers	microcontroller.ti.com	Video and Imaging	www.ti.com/video
RFID	www.ti-rfid.com		
OMAP Applications Processors	www.ti.com/omap	**TI E2E Community**	e2e.ti.com
Wireless Connectivity	www.ti.com/wirelessconnectivity		

Mailing Address: Texas Instruments, Post Office Box 655303, Dallas, Texas 75265
Copyright © 2012, Texas Instruments Incorporated