1310nm 10km SFP+ Transceiver

TPP4XGFLRxG

Product Description

The TPP4XGFLRxG is an enhanced small form factor pluggable (SFP+) fiber optic transceiver with digital diagnostics monitoring functionality (DDM). Compliance with Ethernet standard makes it ideally suited for 10Gbps data-com applications. DDM functionality (alarm and warning features) is integrated into the design via an I^2C serial interface per the Multi-Source Agreement (MSA) SFF-8472, Rev. 10.4.

The transceiver supports data rates from 11.3Gbps down to 8Gbps. It provides an excellent solution for data transmission at 1310nm over up to 10km single mode fiber. The sub-watt power consumption and excellent EMI performance allow system design with high port density. The product is RoHS compliant and is designed and tested in accordance with industry safety standards. The transceiver is Class I Laser product per U.S. FDA/CDRH and international IEC-60825 standards.

The TPP4XGFLRxG transceiver connects to standard 20-pad SFP+ connectors for hot plug capability. This allows the system designer to make configuration changes or maintenance by simply plugging in different transceivers without removing the power supply from the host system. The transmitter and receiver DATA interfaces are internally AC-coupled. LV-TTL Transmitter Disable control input and Loss of Signal (LOS) output interfaces are also provided.

The transceiver has bail-type latch, which offers an easy and convenient way to release the modules. The latch is compliant with the SFP MSA.

The transceiver operates from a single +3.3V power supply over an operating case temperature range of -5°C to +70°C (Commercial), or -5°C to +85°C (Extended) or -40°C to +85°C (Industrial). The housing is made of metal for EMI immunity.

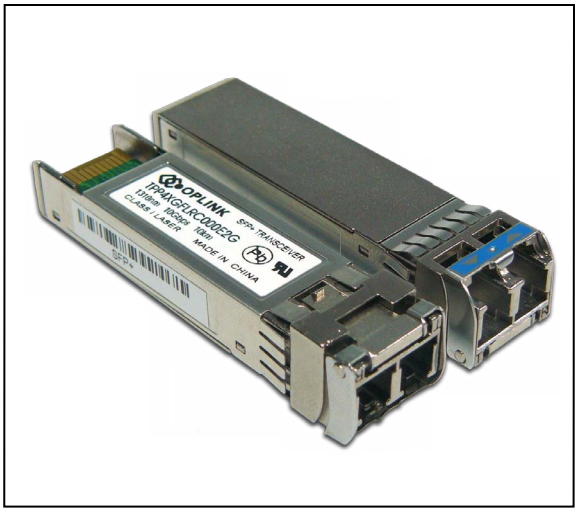

Features

- ☑ Transmission distance up to 10km (SM fiber)
- ☑ Low power consumption
- ☑ Wide case operating temperature range
- ☑ Compliant to SFP+ Electrical MSA SFF-8431
- ☑ Compliant to SFP+ Mechanical MSA SFF-8432
- ☑ Compliant to 10GBASE-L specifications
- ☑ Digital Diagnostics Monitoring (DDM) through Serial Interface compliant with SFF-8472, Rev. 10.4
- ☑ RoHS 6/6 Compliant
- ☑ Laser Class 1 IEC/CDRH Compliant

Absolute Maximum Ratings

Parameter		Symbol	Minimum	Maximum	Units
Storage Temperature Range		T_{ST}	- 40	+ 85	°C
Operating Case Temperature [1]	"Commercial"	T_{OP}	- 5	+ 70	°C
	"Extended"		- 5	+ 85	
	"Industrial"		- 40	+ 85	
Operating Relative Humidity [2]		RH	0	85	%
Supply Voltage Range		V_{CC}	- 0.5	+ 3.6	V

[1] Measured on top side of SFP+ module at the front center vent hole of the cage
[2] Non condensing

Preliminary

Transmitter Performance Characteristics (Over Operating Case Temperature. V_{CC} = 3.13 to 3.47V)

Parameter	Symbol	Minimum	Typical	Maximum	Units
Data Rate	B	-	10.3125	-	Gb/s
Center Wavelength	λ_C	1260	1310	1355	nm
Spectral Width	$\Delta\lambda_{20}$	-	-	1.0	nm
Average Optical Output Power [1]	P_{Avg}	- 8.2	-	+ 0.5	dBm
Optical Modulation Amplitude	P_{OMA}	- 5.2	-	-	dBm
Extinction Ratio	ER	3.5	-	-	dB
Relative Intensity Noise	RIN	-	-	- 128	dB/Hz
Side Mode Suppression Ratio	$SMSR$	30	-	-	dB
Optical Return Loss Tolerance	-	-	-	- 12	dB
Transmitter and Dispersion Penalty @ 10.3125Gb/s	TDP	-	-	3.2	dB
Average Launch Power of OFF transmitter	P_{OFF}	-	-	- 30	dB
Optical Output Eye	Compliant with IEEE 802.3ae				

[1] Average power figures are informative only, per IEEE 802.3ae

Receiver Performance Characteristics (Over Operating Case Temperature. V_{CC} = 3.13 to 3.47V)

Parameter		Symbol	Minimum	Typical	Maximum	Units
Data Rate		B	-	10.3125	-	Gb/s
Wavelength of Operation		λ	1260	1310	1355	nm
Receiver Sensitivity	P_{avg} @ 10.3125Gb/s [1]	P_{min}	-	-	- 14.4	dBm
	OMA @ 10.3125Gb/s [1]		-	-	- 12.6	dBm
Stressed Receiver Sensitivity in OMA (@10.3125Gb/s) [2]		-	-	-	- 10.3	dBm
Maximum Input Optical Power (10 $^{-12}$ BER)		P_{max}	+ 0.5	-	-	dBm
Receiver Reflectance		-	-	-	- 12	dB
LOS Hysteresis		-	0.5	1.5	-	dB
LOS Thresholds	Increasing Light Input	P_{los+}	-	-	- 11	dBm
	Decreasing Light Input	P_{los-}	- 30	-	-	

[1] Specified with BER <1x10^{-12} and PRBS 2 ^{31}-1
[2] Comply with IEEE 802.3ae

Note: The specified characteristics are met within the recommended range of operation. Unless otherwise noted typical data are quoted at nominal voltage and +25°C ambient temperature.

Laser Safety:
All transceivers are Class I Laser products per FDA/CDRH and IEC-60825 standards. They must be operated under specified operating conditions.

Oplink Communications, Inc.
DATE OF MANUFACTURE:

This product complies with
21 CFR 1040.10 and 1040.11
Meets Class I Laser Safety Requirements

Transmitter Electrical Characteristics (Over Operating Case Temperature. V_{cc} = 3.13 to 3.47V)

Parameter	Symbol	Minimum	Typical	Maximum	Units
Differential Input Impedance	Z_d	-	100	-	Ω
Differential Input Voltage Swing	$V_{PP-DIFF}$	180	-	700	mV
Input HIGH Voltage (TX Disable) [1]	V_{IH}	2.0	-	V_{CC}	V
Input LOW Voltage (TX Disable) [1]	V_{IL}	0	-	0.8	V
Output HIGH Voltage (TX Fault) [2]	V_{OH}	2.0	-	V_{CC} + 0.3	V
Output LOW Voltage (TX Fault) [2]	V_{OL}	0	-	0.8	V

[1] There is an internal 4.7kΩ to 10kΩ pull-up resistor to VccT
[2] Open collector compatible, 4.7kΩ to 10kΩ pull-up resistor to Vcc (Host Supply Voltage)

Receiver Electrical Interface (Over Operating Case Temperature. V_{cc} = 3.13 to 3.47V)

Parameter	Symbol	Minimum	Typical	Maximum	Units
Differential Output Impedance	Z_d	-	100	-	Ω
Differential Output Swing	$V_{PP-DIFF}$	300	-	850	mV
Output Rise and Fall time 20% to 80%	t_{RH}, t_{FH}	24	-	-	ps
Output HIGH Voltage (LOS) [1]	V_{OH}	2.0	-	V_{CC} + 0.3	V
Output LOW Voltage (LOS) [1]	V_{OL}	0	-	0.8	V

[1] Open collector compatible, 4.7kΩ to 10kΩ pull-up resistor to Vcc (Host Supply Voltage)

Electrical Power Supply Characteristics (Over Operating Case Temperature. V_{cc} = 3.13 to 3.47V)

Parameter	Symbol	Minimum	Typical	Maximum	Units
Power Supply Voltage	V_{CC}	3.13	3.30	3.47	V
DC Common Mode Voltage	V_{CM}	0	-	3.60	V
Supply Current	I_{VCC}	-	-	288	mA
Power Consumption	P_W	-	-	1.0	W

Note: The specified characteristics are met within the recommended range of operation. Unless otherwise noted typical data are quoted at nominal voltage and +25°C ambient temperature.

Connector Pin-out

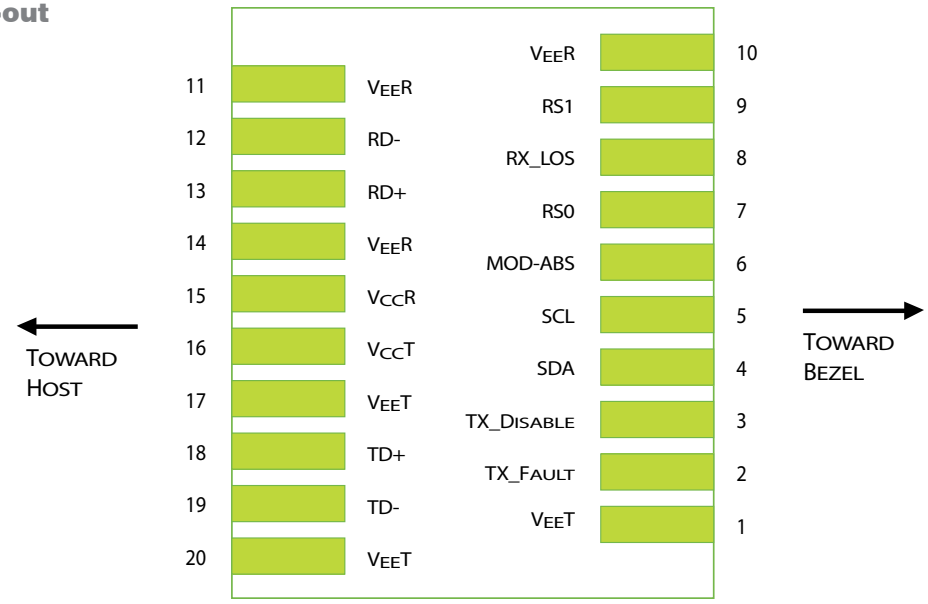

Module Pin Description

Pin	Logic	Symbol	Description
1	-	*VeeT*	Module Transmitter Ground
2	*LVTTL-O*	*TX_Fault*	Module Transmitter Fault
3	*LVTTL-I*	*TX_Disable*	Transmitter Disable; Turns off transmitter laser output
4	*LVTTL-I/O*	*SDA*	2-Wire Serial Interface Data Line
5	*LVTTL-I/O*	*SCL*	2-Wire Serial Interface Clock
6	-	*MOD-ABS*	Module Definition, Grounded in the module
7	*LVTTL-I*	*RS0*	No function implemented
8	*LVTTL-O*	*RX_LOS*	Receiver Loss of Signal Indication
9	*LVTTL-I*	*RS1*	No function implemented
10	-	*VeeR*	Module Receiver Ground
11	-	*VeeR*	Module Receiver Ground
12	*CML-O*	*RD-*	Receiver Inverted Data Output
13	*CML-O*	*RD+*	Receiver Non-Inverted Data Output
14	-	*VeeR*	Module Receiver Ground
15	-	*VccR*	Module Receiver 3.3V Supply
16	-	*VccT*	Module Transmitter 3.3V Supply
17	-	*VeeT*	Module Transmitter Ground
18	*CML-I*	*TD+*	Transmitter Non-Inverted Data Input
19	*CML-I*	*TD-*	Transmitter Inverted Data Input
20	-	*VeeT*	Module Transmitter Ground

Application Notes

Electrical Interface: All signal interfaces are compliant with the SFP+ MSA specification. The high speed DATA interface is differential AC-coupled internally and can be directly connected to a 3.3V SERDES IC. All low speed control and sense output signals are open collector TTL compatible and should be pulled up with a 4.7kΩ - 10kΩ resistor on the host board.

Loss of Signal (LOS): The Loss of Signal circuit monitors the level of the incoming optical signal and generates logic HIGH when an insufficient photocurrent is produced.

TX_Fault: The output indicates LOW when the transmitter is operating normally and HIGH with a laser fault including laser end-of-life. TX Fault is an open collector/drain output and should be pulled up with a 4.7kΩ - 10kΩ resistor on the host board.

TX_Disable: When the TX Disable pin is at logic HIGH, the transmitter optical output is disabled. The laser is also disabled if this line is left floating, as it is pulled high inside the transceiver.

Serial Identification and Monitoring: The module definition of SFP is indicated by the MOD_ABS pin and the 2-wrie serial interface. Upon power up, the 2-wrie interface appears as NC (no connection), and MOD_ABS is TTL LOW. When the host system detects this condition, it activates the serial protocol (standard two-wire I^2C serial interface) and generates the serial clock signal (SCL). The positive edge clocks data into the EEPROM segments of the device that are not write protected, and the negative edge clocks data from the device. The serial data signal (SDA) is for serial data transfer. The host uses SDA in conjunction with SCL to mark the start and end of serial protocol activation. The supported monitoring functions are temperature, voltage, bias current, transmitter power, average receiver signal, all alarms and warnings, and software monitoring of TX Fault/LOS. The device is internally calibrated.

The data transfer protocol and the details of the mandatory and vendor specific data structures are defined in the SFP MSA, and SFF-8472, Rev. 10.4.

Power Supply and Grounding: The power supply line should be well-filtered. All power supply bypass capacitors should be as close to the transceiver module as possible.

Interfacing the Transceivers

Communication is via a serial 2-wire serial interface. As described in the document SFF-8472 (REV. 10.4) there are two distinct address spaces:

Base Address A0(hex)	
Byte Address	**Content**
0 – 95	Serial Transceiver ID as defined in SFP MSA
96 – 127	OPLINK Specific
128 – 255	Reserved

Base Address A2(hex)	
Byte Address	**Content**
0 - 55	Alarm & Warnings thresholds & limits
56 - 95	External calibration constants (not used)
96 – 119	Values from real time diagnostic monitoring
120 – 127	Not used
128 – 247	Customer specific, writable area
248 - 255	Not used

Application Schematics

Recommended electrical connections to transceiver are shown below.

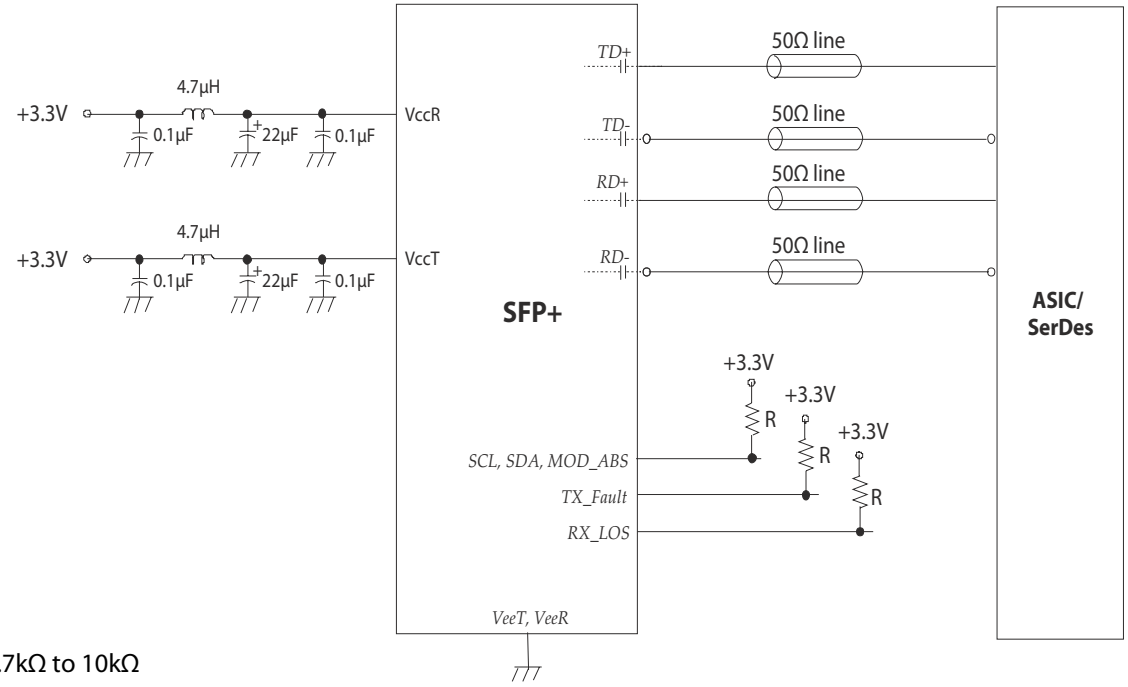

R: 4.7kΩ to 10kΩ

ESD & Electromagnetic Compatibility

Requirements	Standard	Status
Electro Static Discharge to the Electrical Pins (ESD)	EIA/JESD22-A114-B MIL-STD 883C Method 3015.7	Exceeds requirements Class 1B (>1000V)
Immunity to ESD (housing, receptacle)	IEN 61000-4-2	Exceeds requirements Discharges ranging from 2kV to 15kV without damages to the transceiver
Electromagnetic Emission (EMI)	FCC Part 15, Class B EN 55022 Class B CISPR 22	Exceeds requirements Class B

Package Outline

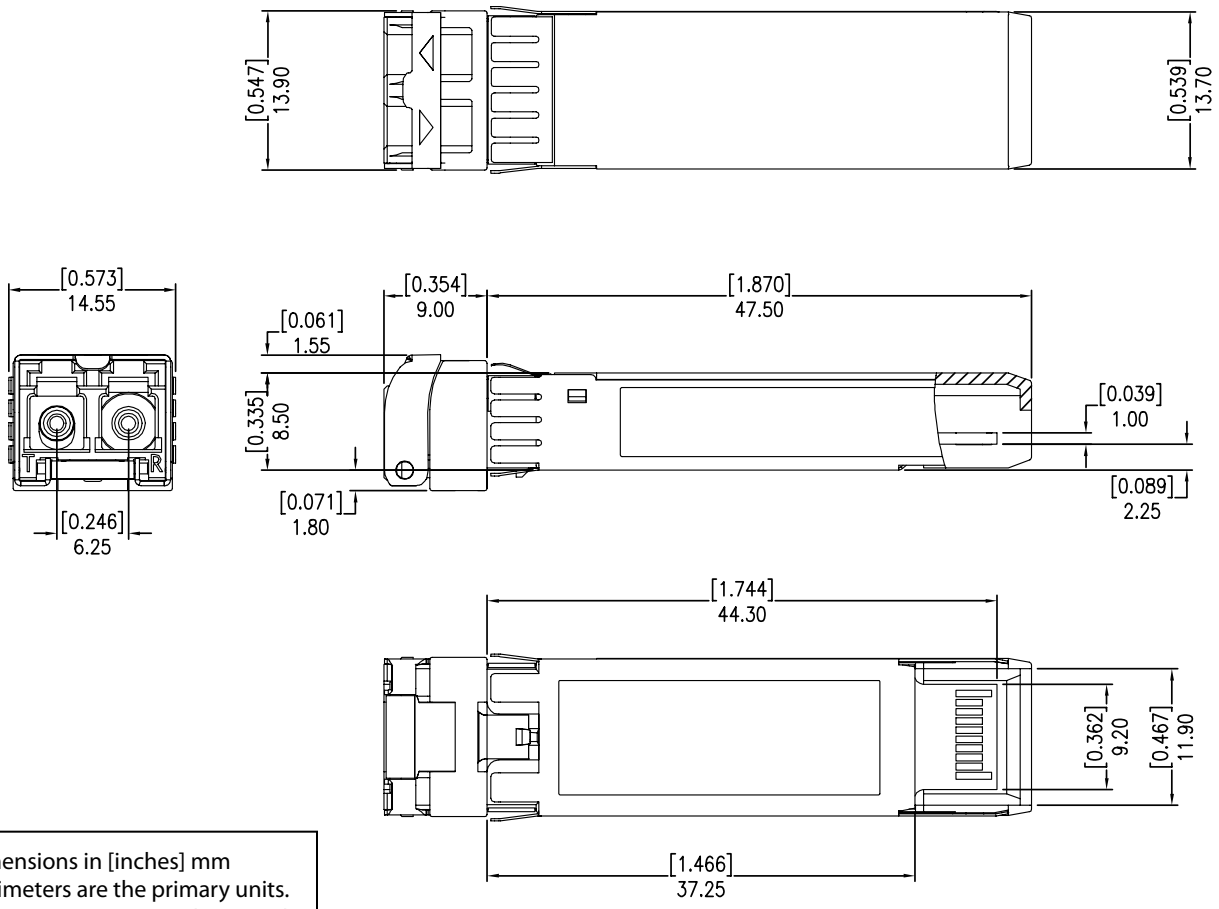

Dimensions in [inches] mm
Millimeters are the primary units.
Tolerances are in accordance with SFF-8432 Rev.5

Ordering Information

Oplink can provide a remarkable range of customized optical solutions. For detail, please contact Oplink's Sales and Marketing for your requirements and ordering information (510) 933-7200 or Sales@oplink.com.

Part Number	Operating Temperature		Latch Color	Nominal Wavelength	Distance
TPP4XGFLRC000E2G	- 5°C to + 70°C	Commercial	Blue	1310nm	10km
TPP4XGFLRE000E2G	- 5°C to + 85°C	Extended			
TPP4XGFLRI000E2G	- 40°C to + 85°C	Industrial			

Oplink Communications, Inc. reserves the right to make changes in equipment design or specifications without notice. Information supplied by Oplink Communications, Inc. is believed to be accurate and reliable. However, no responsibility is assumed by Oplink Communications, Inc. for its use nor for any infringements of third parties, which may result from its use. No license is granted by implication or otherwise under any patent right of Oplink Communications, Inc.
© 2012, Oplink Communications, Inc.

S0297. Rev.01. (web) 2012-04-05

46335 Landing Pkwy Fremont, CA 94538 Tel: (510) 933-7200 Fax: (510) 933-7300 Email: Sales@Oplink.com • www.oplink.com