- **Low $r_{DS(on)}$ . . . 1 Ω Typ**
- **Output Short-Circuit Protection**
- **Avalanche Energy . . . 75 mJ**
- **Eight 350-mA DMOS Outputs**
- **50-V Switching Capability**
- **Enhanced Cascading for Multiple Stages**
- **All Registers Cleared With Single Input**
- **Low Power Consumption**

NE PACKAGE
(TOP VIEW)

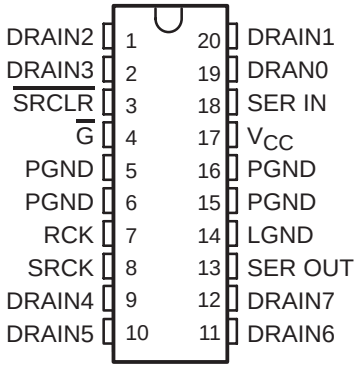

DW PACKAGE
(TOP VIEW)

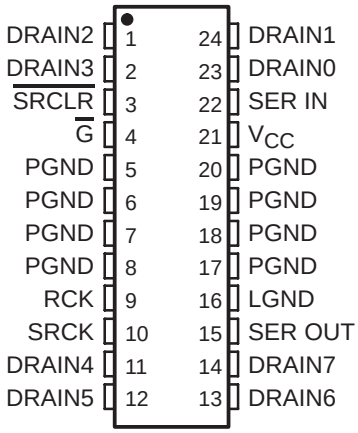

description

The TPIC6A596 is a monolithic, high-voltage, high-current power logic 8-bit shift register designed for use in systems that require relatively high load power. The device contains a built-in voltage clamp on the outputs for inductive transient protection. Power driver applications include relays, solenoids, and other medium-current or high-voltage loads. Each open-drain DMOS transistor features an independent chopping current-limiting circuit to prevent damage in the case of a short circuit.

This device contains an 8-bit serial-in, parallel-out shift register that feeds an 8-bit, D-type storage register. Data transfers through both the shift and storage registers on the rising edge of the shift-register clock (SRCK) and the register clock (RCK), respectively. The storage register transfers data to the output buffer when shift-register clear ($\overline{\text{SRCLR}}$) is high. When $\overline{\text{SRCLR}}$ is low, all registers in the device are cleared. When output enable $\overline{\text{G}}$ is held high, all data in the output buffers is held low and all drain outputs are off. When $\overline{\text{G}}$ is held low, data from the storage register is transparent to the output buffers. The serial output (SER OUT) is clocked out of the device on the falling edge of SRCK to provide additional hold time for cascaded applications. This will provide improved performance for applications where clock signals may be skewed, devices are not located near one another, or the system must tolerate electromagnetic interference.

Outputs are low-side, open-drain DMOS transistors with output ratings of 50 V and a 350-mA continuous sink current capability. When data in the output buffers is low, the DMOS-transistor outputs are off. When data is high, the DMOS-transistor outputs have sink current capability.

Separate power ground (PGND) and logic ground (LGND) terminals are provided to facilitate maximum system flexibility. All PGND terminals are internally connected, and each PGND terminal must be externally connected to the power system ground in order to minimize parasitic impedance. A single-point connection between LGND and PGND must be made externally in a manner that reduces crosstalk between the logic and load circuits.

The TPIC6A596 is offered in a thermally-enhanced dual-in-line (NE) package and a wide-body surface-mount (DW) package. The TPIC6A596 is characterized for operation over the operating case temperature range of −40°C to 125°C.

Please be aware that an important notice concerning availability, standard warranty, and use in critical applications of Texas Instruments semiconductor products and disclaimers thereto appears at the end of this data sheet.

PRODUCTION DATA information is current as of publication date. Products conform to specifications per the terms of Texas Instruments standard warranty. Production processing does not necessarily include testing of all parameters.

Copyright © 2000 − 2005, Texas Instruments Incorporated

logic symbol†

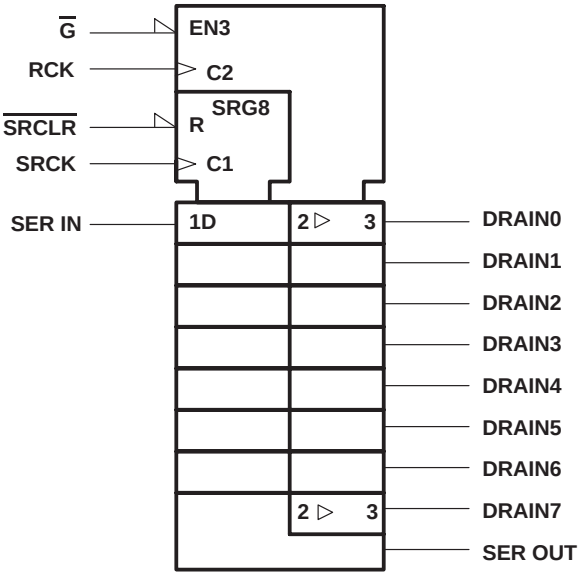

† This symbol is in accordance with ANSI/IEEE Std 91-1984 and IEC Publication 617-12.

logic diagram (positive logic)

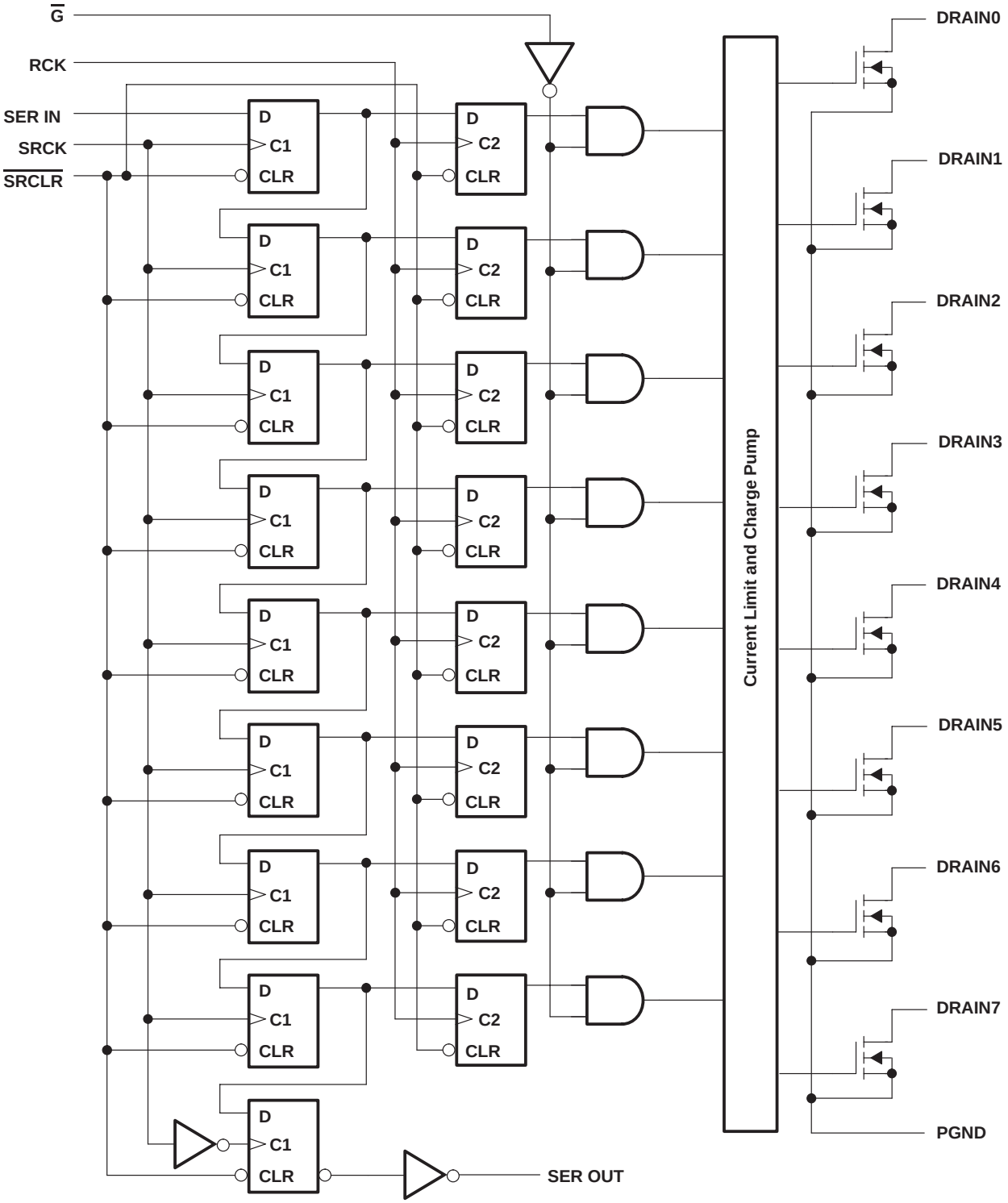

schematic of inputs and outputs

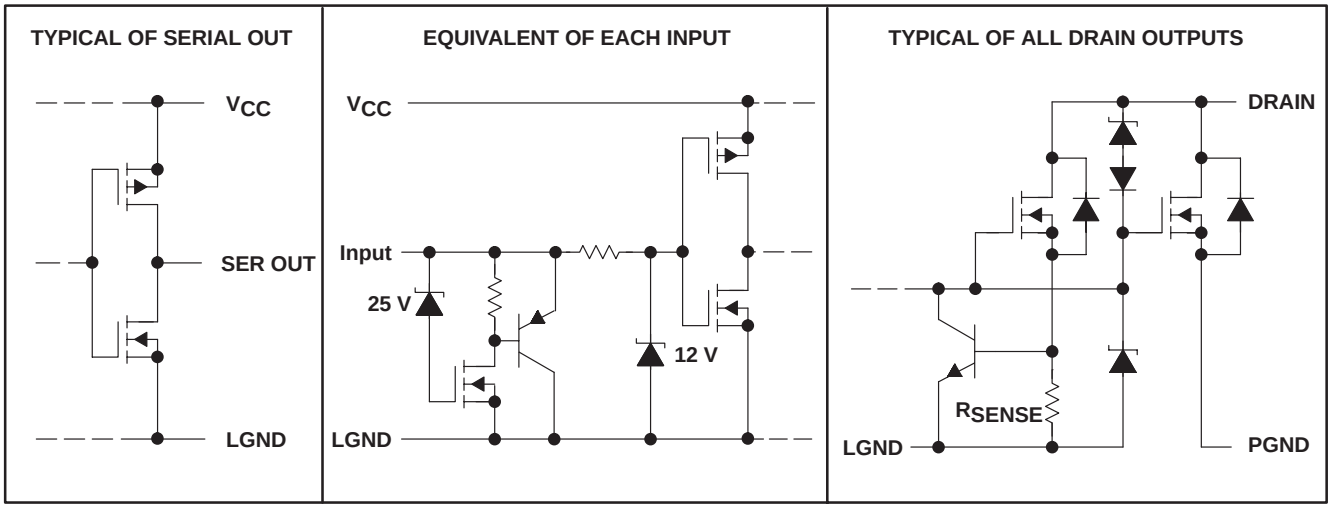

absolute maximum ratings over recommended operating case temperature range (unless otherwise noted)†

Logic supply voltage, V_{CC} (see Note 1)	7 V
Logic input voltage range, V_I	−0.3 V to 7 V
Power DMOS drain-to-source voltage, V_{DS} (see Note 2)	50 V
Continuous source-drain diode anode current	1 A
Pulsed source-drain diode anode current (see Note 3)	2 A
Pulsed drain current, each output, all outputs on, I_{Dn}, T_A = 25°C (see Note 3)	1.1 A
Continuous drain current, each output, all outputs on, I_{Dn}, T_A = 25°C	350 mA
Peak drain current, single output, T_A = 25°C (see Note 3)	1.1 A
Single-pulse avalanche energy, E_{AS} (see Figure 6)	75 mJ
Avalanche current, I_{AS} (see Note 4)	600 mA
Continuous total dissipation	See Dissipation Rating Table
Operating case temperature range, T_C	−40°C to 125°C
Operating virtual junction temperature range, T_J	−40°C to 150°C
Storage temperature range, T_{stg}	−65°C to 150°C
Lead temperature 1,6 mm (1/16 inch) from case for 10 seconds	260°C

† Stresses beyond those listed under “absolute maximum ratings” may cause permanent damage to the device. These are stress ratings only, and functional operation of the device at these or any other conditions beyond those indicated under “recommended operating conditions” is not implied. Exposure to absolute-maximum-rated conditions for extended periods may affect device reliability.

NOTES: 1. All voltage values are with respect to LGND and PGND.
2. Each power DMOS source is internally connected to PGND.
3. Pulse duration ≤ 100 µs and duty cycle ≤ 2 %.
4. DRAIN supply voltage = 15 V, starting junction temperature (T_{JS}) = 25°C, L = 210 mH, I_{AS} = 600 mA (see Figure 6).

DISSIPATION RATING TABLE

PACKAGE	$T_C \le 25°C$ POWER RATING	DERATING FACTOR ABOVE T_C = 25°C	T_C = 125°C POWER RATING
DW	1750 mW	14 mW/°C	350 mW
NE	2500 mW	20 mW/°C	500 mW

recommended operating conditions

	MIN	MAX	UNIT
Logic supply voltage, V_{CC}	4.5	5.5	V
High-level input voltage, V_{IH}	0.85 V_{CC}	V_{CC}	V
Low-level input voltage, V_{IL}	0	0.15 V_{CC}	V
Pulsed drain output current, T_C = 25°C, V_{CC} = 5 V (see Notes 3 and 5)	−1.8	0.6	A
Setup time, SER IN high before SRCK↑, t_{su} (see Figure 2)	10		ns
Hold time, SER IN high after SRCK↑, t_h (see Figure 2)	10		ns
Pulse duration, t_w (see Figure 2)	20		ns
Operating case temperature, T_C	−40	125	°C

NOTES: 3. Pulse duration ≤ 100 µs and duty cycle ≤ 2%.
5. Technique should limit $T_J - T_C$ to 10°C maximum.

electrical characteristics, V_{CC} = 5 V, T_C = 25°C (unless otherwise noted)

PARAMETER		TEST CONDITIONS		MIN	TYP	MAX	UNIT
$V_{(BR)DSX}$	Drain-to-source breakdown voltage	I_D = 1 mA		50			V
V_{SD}	Source-to-drain diode forward voltage	I_F = 350 mA,	See Note 3		0.8	1.1	V
V_{OH}	High-level output voltage, SER OUT	I_{OH} = −20 µA		V_{CC}−0.1	V_{CC}		V
		I_{OH} = −4 mA		V_{CC}−0.5	V_{CC}−0.2		
V_{OL}	Low-level output voltage, SER OUT	I_{OL} = 20 µA			0	0.1	V
		I_{OL} = 4 mA			0.2	0.5	
I_{IH}	High-level input current	$V_I = V_{CC}$				1	µA
I_{IL}	Low-level input current	V_I = 0				−1	µA
$I_{O(chop)}$	Output current at which chopping starts	T_C = 25°C,	See Note 5 and Figures 3 and 4	0.6	0.8	1.1	A
I_{CC}	Logic supply current	I_O = 0,	$V_I = V_{CC}$ or 0		0.5	5	mA
$I_{CC(FRQ)}$	Logic supply current at frequency	f_{SRCK} = 5 MHz, $V_I = V_{CC}$ or 0,	I_O = 0, V_{CC} = 5 V, C_L = 30 pF, See Figure 7		1.3		mA
$I_{(nom)}$	Nominal current	$V_{DS(on)}$ = 0.5 V, V_{CC} = 5 V,	$I_{(nom)} = I_D$, T_C = 85°C, See Notes 5, 6, and 7		350		mA
I_D	Drain current, off-state	V_{DS} = 40 V,	T_C = 25°C		0.1	1	µA
		V_{DS} = 40 V,	T_C = 125°C		0.2	5	
$r_{DS(on)}$	Static drain-source on-state resistance	I_D = 350 mA, T_C = 25°C	See Notes 5 and 6 and Figures 10 and 11		1	1.5	Ω
		I_D = 350 mA, T_C = 125°C			1.7	2.5	

NOTES: 5. Technique should limit $T_J - T_C$ to 10°C maximum.
6. These parameters are measured with voltage-sensing contacts separate from the current-carrying contacts.
7. Nominal current is defined for a consistent comparison between devices from different sources. It is the current that produces a voltage drop of 0.5 V at T_C = 85°C.

switching characteristics, V_{CC} = 5 V, T_C = 25°C

PARAMETER		TEST CONDITIONS	MIN	TYP	MAX	UNIT
t_{PHL}	Propagation delay time, high-to-low-level output from $\overline{G}$	C_L = 30 pF, I_D = 350 mA, See Figures 1, 2, and 12		30		ns
t_{PLH}	Propagation delay time, low-to-high-level output from $\overline{G}$			125		ns
t_r	Rise time, drain output			60		ns
t_f	Fall time, drain output			30		ns
t_{pd}	Propagation delay time, SRCK↓ to SEROUT	C_L = 30 pF, I_D = 350 mA, See Figure 2		20		ns
$f_{(SRCK)}$	Serial clock frequency	C_L = 30 pF, I_D = 350 mA, See Note 8			10	MHz
t_a	Reverse-recovery-current rise time	I_F = 350 mA, di/dt = 20 A/µs, See Notes 5 and 6 and Figure 5		100		ns
t_{rr}	Reverse-recovery time			300		ns

NOTES: 5. Technique should limit $T_J - T_C$ to 10°C maximum.
6. These parameters are measured with voltage-sensing contacts separate from the current-carrying contacts.
8. This is the maximum serial clock frequency assuming cascaded operation where serial data is passed from one stage to a second stage. The clock period allows for SRCK → SEROUT propagation delay and setup time plus some timing margin.

thermal resistance

PARAMETER			TEST CONDITIONS	MIN	MAX	UNIT
$R_{\theta JC}$	Thermal resistance, junction-to-case	DW	All eight outputs with equal power		10	°C/W
		NE			10	
$R_{\theta JA}$	Thermal resistance, junction-to-ambient	DW	All eight outputs with equal power		50	°C/W
		NE			50	

PARAMETER MEASUREMENT INFORMATION

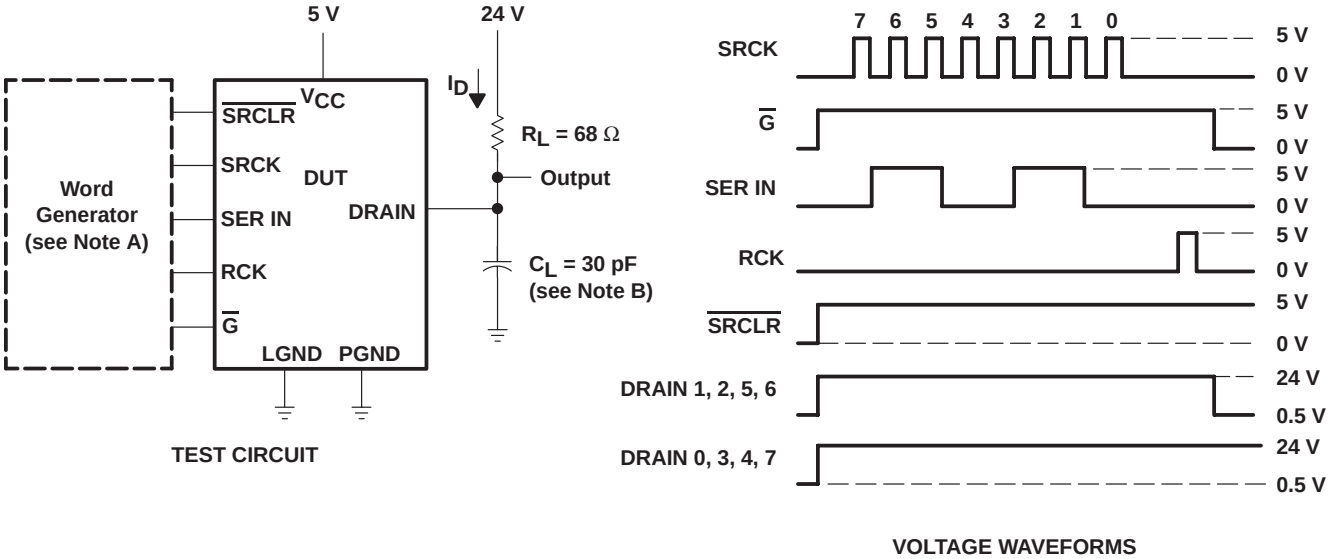

NOTES: A. The word generator has the following characteristics: $t_r \le 10$ ns, $t_f \le 10$ ns, t_W = 300 ns, pulsed repetition rate (PRR) = 5 kHz, Z_O = 50 Ω.
B. C_L includes probe and jig capacitance.

Figure 1. Resistive Load Operation

PARAMETER MEASUREMENT INFORMATION

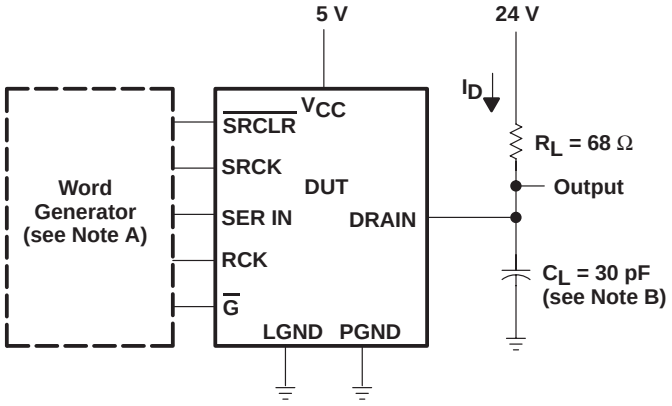

TEST CIRCUIT

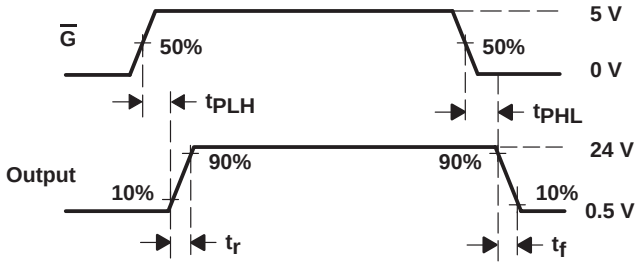

SWITCHING TIMES

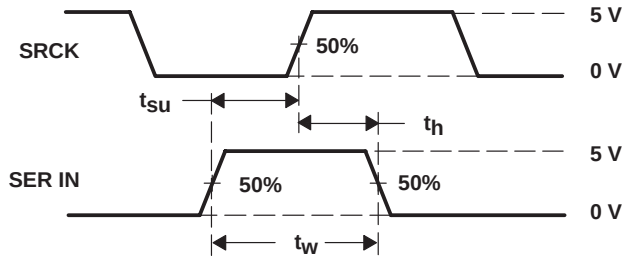

INPUT SETUP AND HOLD WAVEFORMS

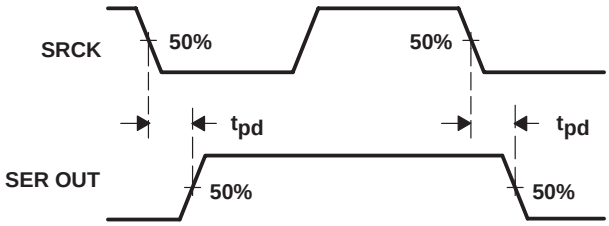

SER OUT PROPAGATION DELAY WAVEFORM

NOTES: A. The word generator has the following characteristics: $t_r \le 10$ ns, $t_f \le 10$ ns, $t_W = 300$ ns, pulsed repetition rate (PRR) = 5 kHz, $Z_O = 50\ \Omega$.
B. C_L includes probe and jig capacitance.

Figure 2. Test Circuit, Switching Times, and Voltage Waveforms

PARAMETER MEASUREMENT INFORMATION

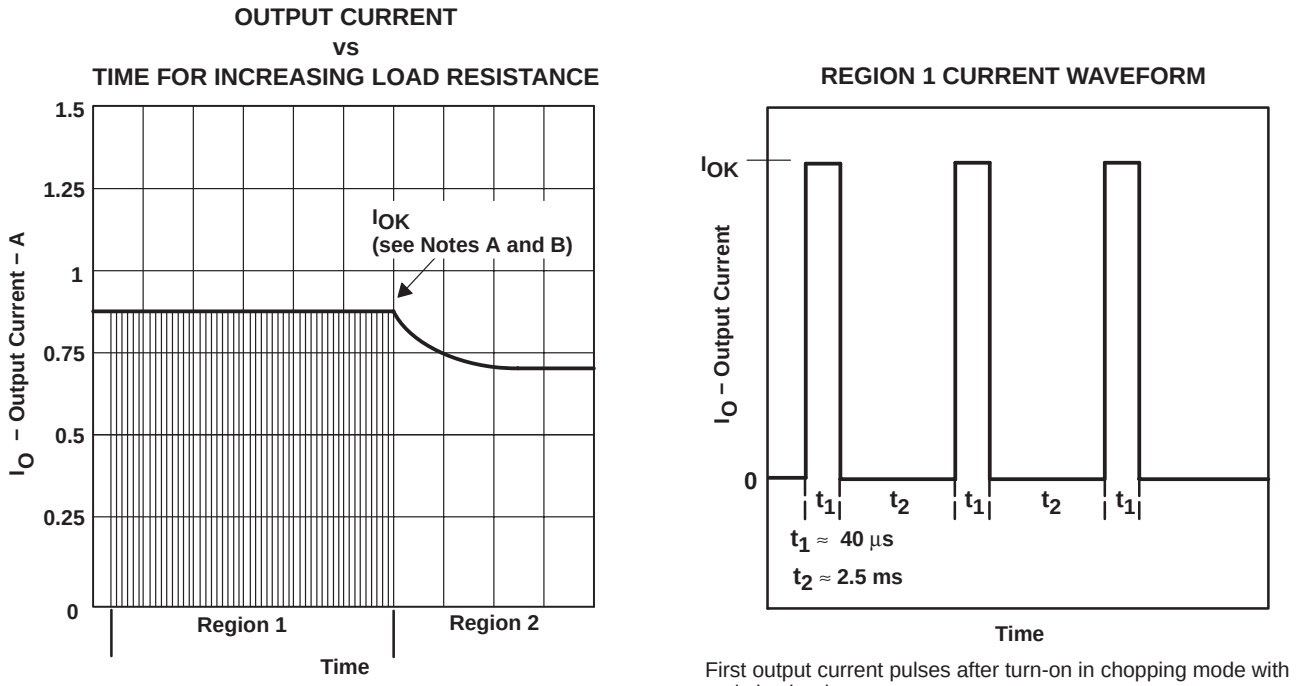

First output current pulses after turn-on in chopping mode with resistive load.

NOTES: A. Figure 3 illustrates the output current characteristics of the device energizing a load having initially low, increasing resistance, e.g., an incandescent lamp. In region 1, chopping occurs and the peak current is limited to I_{OK}. In region 2, output current is continuous. The same characteristics occur in reverse order when the device energizes a load having an initially high, decreasing resistance.
B. Region 1 duty cycle is approximately 2%.

Figure 3. Chopping-Mode Characteristics

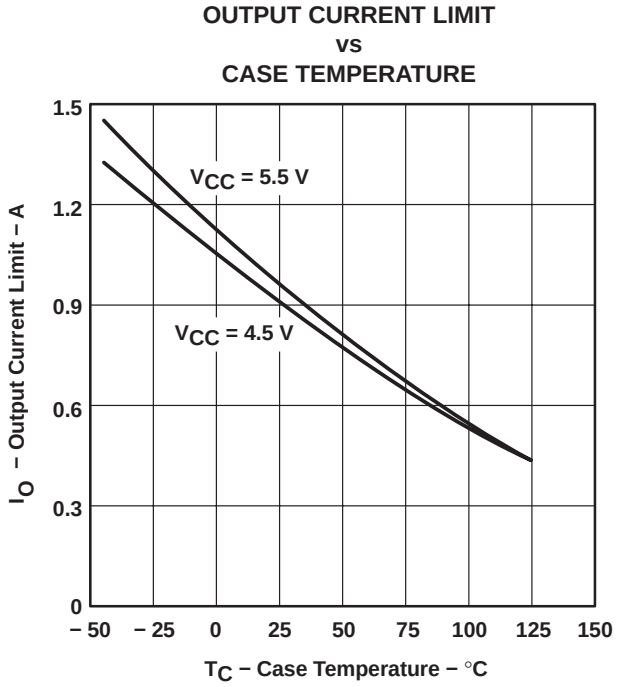

Figure 4

PARAMETER MEASUREMENT INFORMATION

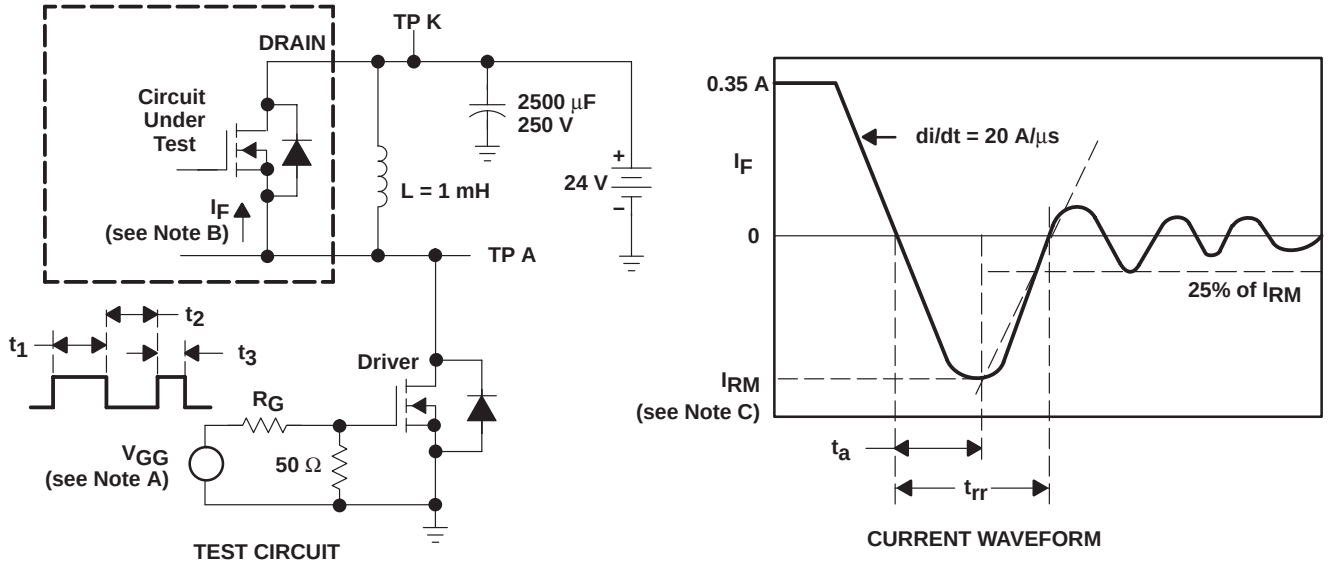

NOTES: A. The V_{GG} amplitude and R_G are adjusted for di/dt = 20 A/μs. A V_{GG} double-pulse train is used to set I_F = 0.35 A, where t_1 = 10 μs, t_2 = 7 μs, and t_3 = 3 μs.
B. The DRAIN terminal under test is connected to the TP K test point. All other terminals are connected together and connected to the TP A test point.
C. I_{RM} = maximum recovery current

Figure 5. Reverse-Recovery-Current Test Circuit and Waveforms of Source-Drain Diode

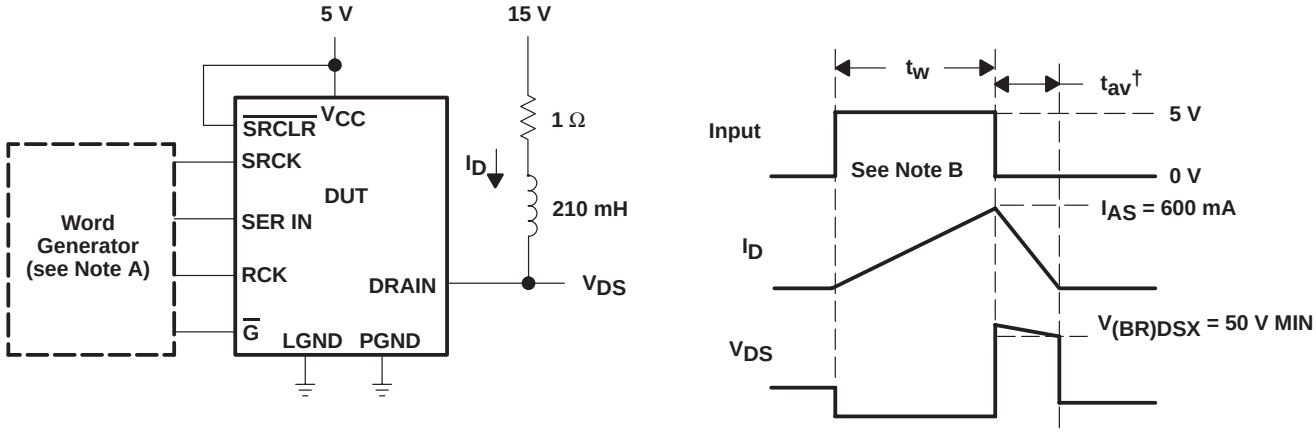

† Non JEDEC symbol for avalanche time.

NOTES: A. The word generator has the following characteristics: $t_r \le 10$ ns, $t_f \le 10$ ns, Z_O = 50 Ω.
B. Input pulse duration, t_w, is increased until peak current I_{AS} = 600 mA.
Energy test level is defined as $E_{AS} = (I_{AS} \times V_{(BR)DSX} \times t_{av})/2$ = 75 mJ.

Figure 6. Single-Pulse Avalanche Energy Test Circuit and Waveforms

TYPICAL CHARACTERISTICS

SUPPLY CURRENT vs FREQUENCY

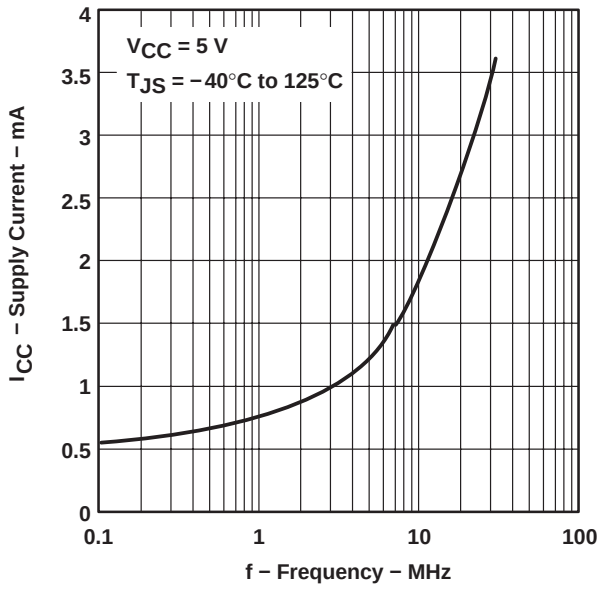

Figure 7

MAXIMUM CONTINUOUS DRAIN CURRENT OF EACH OUTPUT vs NUMBER OF OUTPUTS CONDUCTING SIMULTANEOUSLY

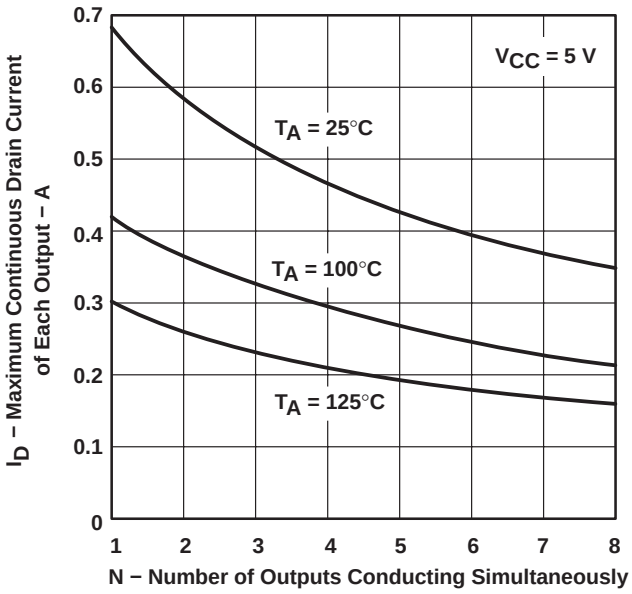

Figure 8

MAXIMUM PEAK DRAIN CURRENT OF EACH OUTPUT vs NUMBER OF OUTPUTS CONDUCTING SIMULTANEOUSLY

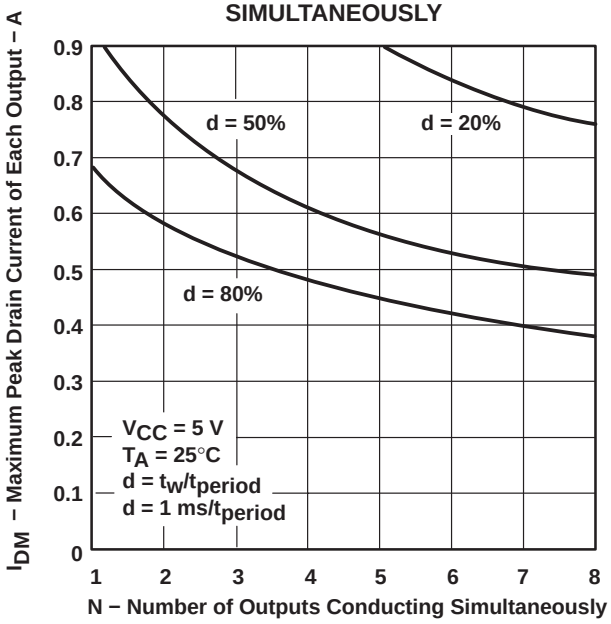

Figure 9

STATIC DRAIN-SOURCE ON-STATE RESISTANCE vs DRAIN CURRENT

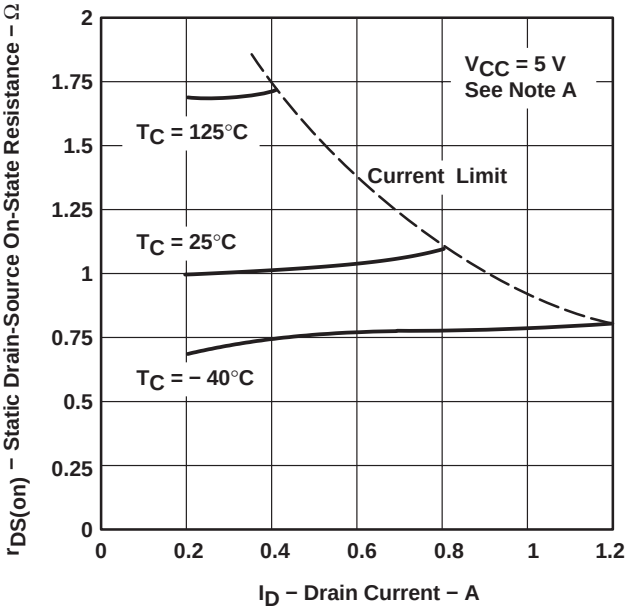

NOTE A: Technique should limit $T_J - T_C$ to 10°C maximum.

Figure 10

TYPICAL CHARACTERISTICS

STATIC DRAIN-SOURCE ON-STATE RESISTANCE vs LOGIC SUPPLY VOLTAGE

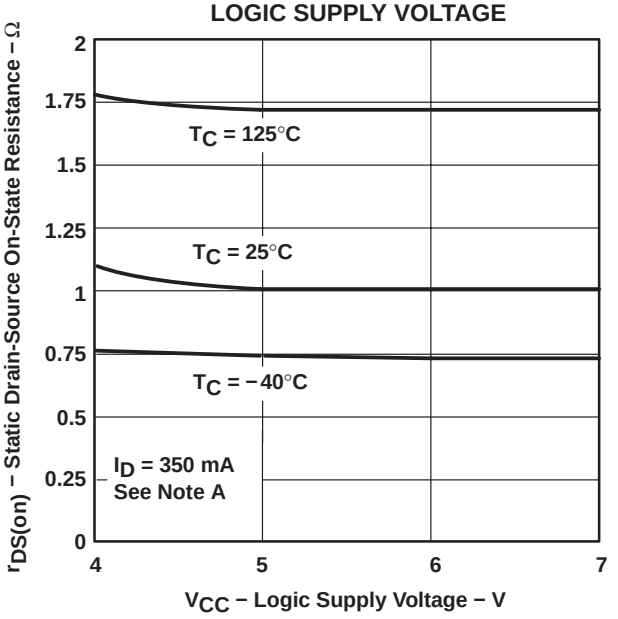

Figure 11

SWITCHING TIME vs CASE TEMPERATURE

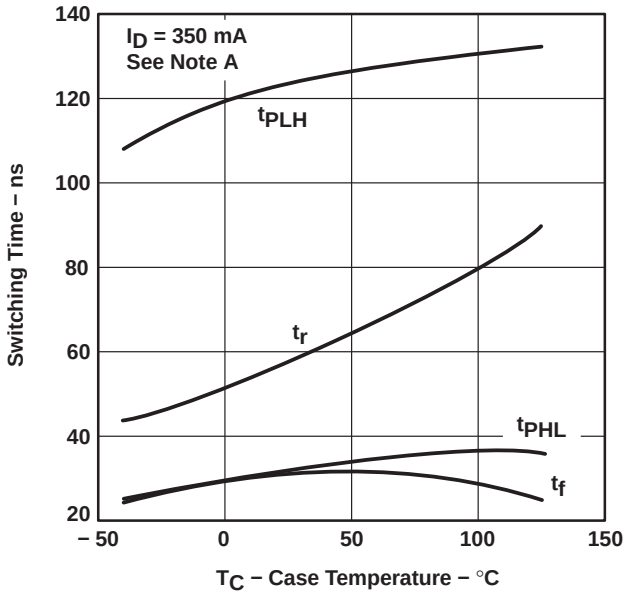

Figure 12

NOTE A: Technique should limit $T_J - T_C$ to 10°C maximum.

TYPICAL $R_{\theta JA}$ THERMAL RESISTANCE vs ON BOARD HEATSINK AREA

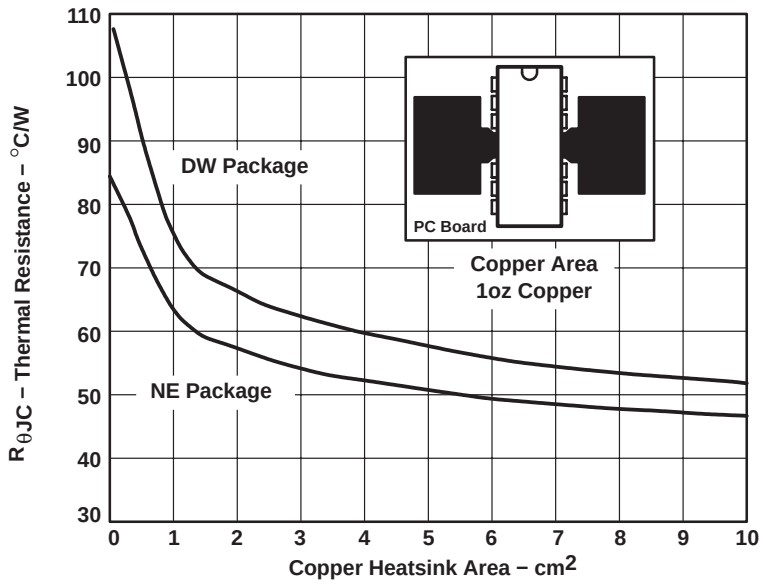

Figure 13

THERMAL INFORMATION

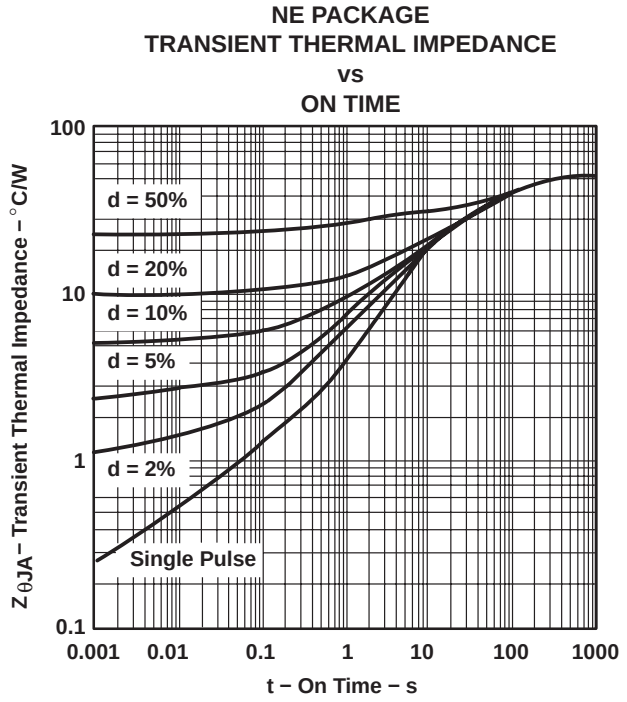

The single-pulse curve represents measured data. The curves for various pulse durations are based on the following equation:

$$Z_{\theta JA} = \left|\frac{t_w}{t_c}\right| R_{\theta JA} + \left|1 - \frac{t_w}{t_c}\right| Z_\theta(t_w + t_c) + Z_\theta(t_w) - Z_\theta(t_c)$$

Where:

$Z_\theta(t_w)$ = the single-pulse thermal impedance for t = t_w seconds

$Z_\theta(t_c)$ = the single-pulse thermal impedance for t = t_c seconds

$Z_\theta(t_w + t_c)$ = the single-pulse thermal impedance for t = $t_w + t_c$ seconds

$d = t_w/t_c$

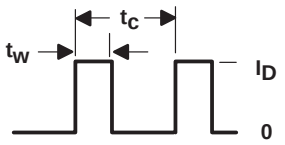

Figure 14

Revision History

DATE	REV	PAGE	SECTION	DESCRIPTION
5/18/05	A	6	Figure 1	Changed $\overline{\text{SRCLR}}$ timing diagram and changed title on Drain timing diagrams
3/2000	*			Original reversion

NOTE: Page numbers for previous revisions may differ from page numbers in the current version.

PACKAGING INFORMATION

Orderable Device	Status (1)	Package Type	Package Drawing	Pins	Package Qty	Eco Plan (2)	Lead/Ball Finish (6)	MSL Peak Temp (3)	Op Temp (°C)	Device Marking (4/5)	Samples
TPIC6A596DW	ACTIVE	SOIC	DW	24	25	Green (RoHS & no Sb/Br)	NIPDAU	Level-1-260C-UNLIM	-40 to 125	TPIC6A596	Samples
TPIC6A596DWG4	ACTIVE	SOIC	DW	24	25	Green (RoHS & no Sb/Br)	NIPDAU	Level-1-260C-UNLIM	-40 to 125	TPIC6A596	Samples
TPIC6A596DWRG4	ACTIVE	SOIC	DW	24	2000	Green (RoHS & no Sb/Br)	NIPDAU	Level-1-260C-UNLIM	-40 to 125	TPIC6A596	Samples
TPIC6A596NE	ACTIVE	PDIP	NE	20	20	Pb-Free (RoHS)	NIPDAU	N / A for Pkg Type	-40 to 125	TPIC6A596NE	Samples

(1) The marketing status values are defined as follows:
ACTIVE: Product device recommended for new designs.
LIFEBUY: TI has announced that the device will be discontinued, and a lifetime-buy period is in effect.
NRND: Not recommended for new designs. Device is in production to support existing customers, but TI does not recommend using this part in a new design.
PREVIEW: Device has been announced but is not in production. Samples may or may not be available.
OBSOLETE: TI has discontinued the production of the device.

(2) **RoHS:** TI defines "RoHS" to mean semiconductor products that are compliant with the current EU RoHS requirements for all 10 RoHS substances, including the requirement that RoHS substance do not exceed 0.1% by weight in homogeneous materials. Where designed to be soldered at high temperatures, "RoHS" products are suitable for use in specified lead-free processes. TI may reference these types of products as "Pb-Free".
RoHS Exempt: TI defines "RoHS Exempt" to mean products that contain lead but are compliant with EU RoHS pursuant to a specific EU RoHS exemption.
Green: TI defines "Green" to mean the content of Chlorine (Cl) and Bromine (Br) based flame retardants meet JS709B low halogen requirements of <=1000ppm threshold. Antimony trioxide based flame retardants must also meet the <=1000ppm threshold requirement.

(3) MSL, Peak Temp. - The Moisture Sensitivity Level rating according to the JEDEC industry standard classifications, and peak solder temperature.

(4) There may be additional marking, which relates to the logo, the lot trace code information, or the environmental category on the device.

(5) Multiple Device Markings will be inside parentheses. Only one Device Marking contained in parentheses and separated by a "~" will appear on a device. If a line is indented then it is a continuation of the previous line and the two combined represent the entire Device Marking for that device.

(6) Lead/Ball Finish - Orderable Devices may have multiple material finish options. Finish options are separated by a vertical ruled line. Lead/Ball Finish values may wrap to two lines if the finish value exceeds the maximum column width.

Important Information and Disclaimer: The information provided on this page represents TI's knowledge and belief as of the date that it is provided. TI bases its knowledge and belief on information provided by third parties, and makes no representation or warranty as to the accuracy of such information. Efforts are underway to better integrate information from third parties. TI has taken and

continues to take reasonable steps to provide representative and accurate information but may not have conducted destructive testing or chemical analysis on incoming materials and chemicals.
TI and TI suppliers consider certain information to be proprietary, and thus CAS numbers and other limited information may not be available for release.

In no event shall TI's liability arising out of such information exceed the total purchase price of the TI part(s) at issue in this document sold by TI to Customer on an annual basis.

TAPE AND REEL INFORMATION

REEL DIMENSIONS

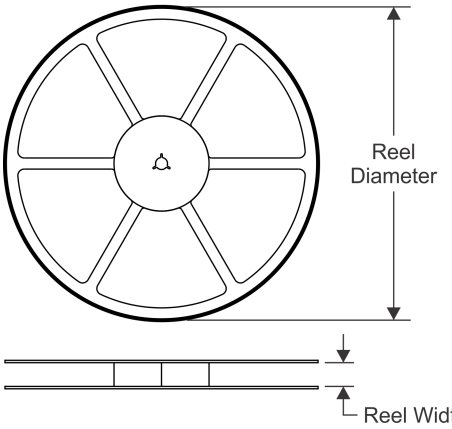

TAPE DIMENSIONS

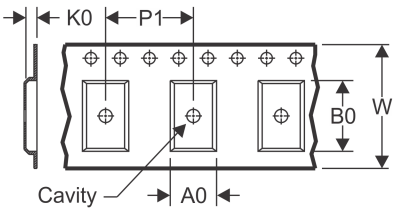

A0	Dimension designed to accommodate the component width
B0	Dimension designed to accommodate the component length
K0	Dimension designed to accommodate the component thickness
W	Overall width of the carrier tape
P1	Pitch between successive cavity centers

QUADRANT ASSIGNMENTS FOR PIN 1 ORIENTATION IN TAPE

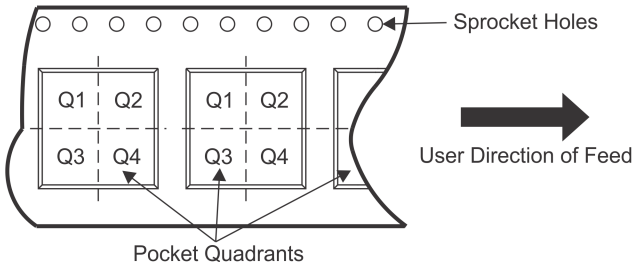

*All dimensions are nominal

Device	Package Type	Package Drawing	Pins	SPQ	Reel Diameter (mm)	Reel Width W1 (mm)	A0 (mm)	B0 (mm)	K0 (mm)	P1 (mm)	W (mm)	Pin1 Quadrant
TPIC6A596DWRG4	SOIC	DW	24	2000	330.0	24.4	10.75	15.7	2.7	12.0	24.0	Q1

TAPE AND REEL BOX DIMENSIONS

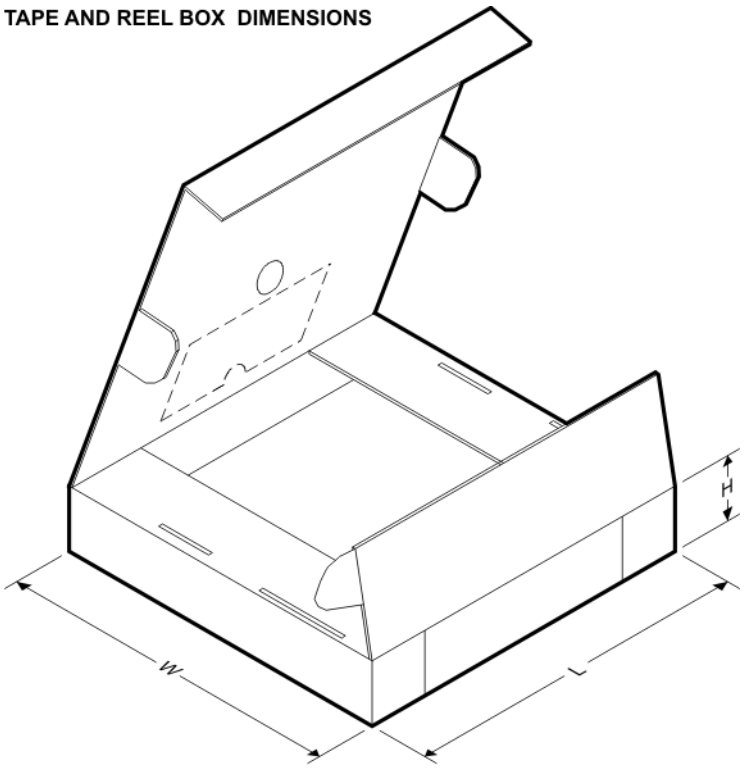

*All dimensions are nominal

Device	Package Type	Package Drawing	Pins	SPQ	Length (mm)	Width (mm)	Height (mm)
TPIC6A596DWRG4	SOIC	DW	24	2000	350.0	350.0	43.0

DW (R–PDSO–G24) PLASTIC SMALL OUTLINE

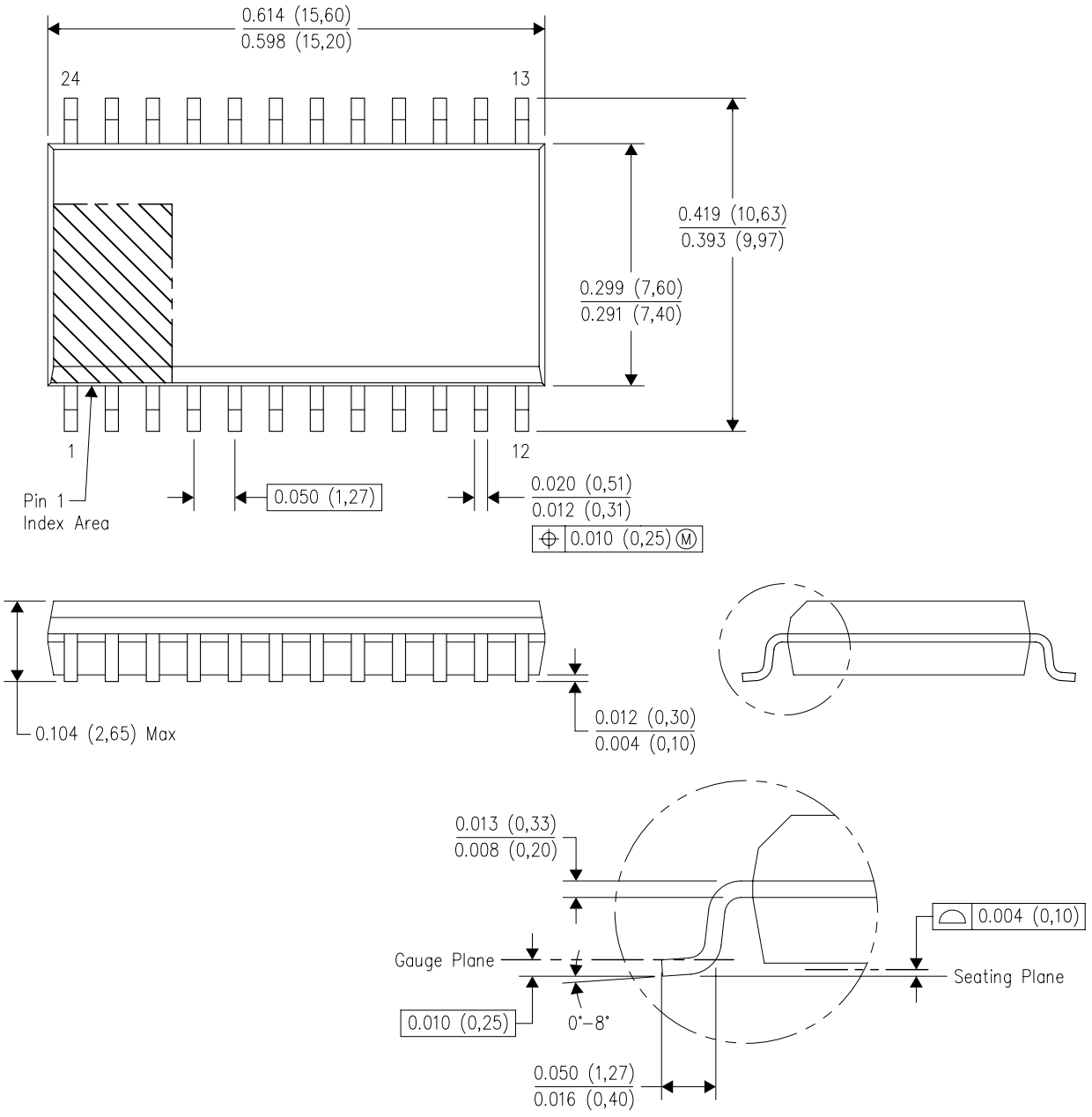

NOTES:
A. All linear dimensions are in inches (millimeters). Dimensioning and tolerancing per ASME Y14.5M–1994.
B. This drawing is subject to change without notice.
C. Body dimensions do not include mold flash or protrusion not to exceed 0.006 (0,15).
D. Falls within JEDEC MS–013 variation AD.

IMPORTANT NOTICE AND DISCLAIMER

TI PROVIDES TECHNICAL AND RELIABILITY DATA (INCLUDING DATASHEETS), DESIGN RESOURCES (INCLUDING REFERENCE DESIGNS), APPLICATION OR OTHER DESIGN ADVICE, WEB TOOLS, SAFETY INFORMATION, AND OTHER RESOURCES “AS IS” AND WITH ALL FAULTS, AND DISCLAIMS ALL WARRANTIES, EXPRESS AND IMPLIED, INCLUDING WITHOUT LIMITATION ANY IMPLIED WARRANTIES OF MERCHANTABILITY, FITNESS FOR A PARTICULAR PURPOSE OR NON-INFRINGEMENT OF THIRD PARTY INTELLECTUAL PROPERTY RIGHTS.

These resources are intended for skilled developers designing with TI products. You are solely responsible for (1) selecting the appropriate TI products for your application, (2) designing, validating and testing your application, and (3) ensuring your application meets applicable standards, and any other safety, security, or other requirements. These resources are subject to change without notice. TI grants you permission to use these resources only for development of an application that uses the TI products described in the resource. Other reproduction and display of these resources is prohibited. No license is granted to any other TI intellectual property right or to any third party intellectual property right. TI disclaims responsibility for, and you will fully indemnify TI and its representatives against, any claims, damages, costs, losses, and liabilities arising out of your use of these resources.

TI’s products are provided subject to TI’s Terms of Sale (www.ti.com/legal/termsofsale.html) or other applicable terms available either on ti.com or provided in conjunction with such TI products. TI’s provision of these resources does not expand or otherwise alter TI’s applicable warranties or warranty disclaimers for TI products.

Mailing Address: Texas Instruments, Post Office Box 655303, Dallas, Texas 75265
Copyright © 2020, Texas Instruments Incorporated