- **Low $r_{DS(on)}$ . . . 0.26 Ω Typ**
- **High Voltage Output . . . 60 V**
- **Extended ESD Capability . . . 4000 V**
- **Pulsed Current . . . 8 A Per Channel**
- **Fast Commutation Speed**

D PACKAGE
(TOP VIEW)

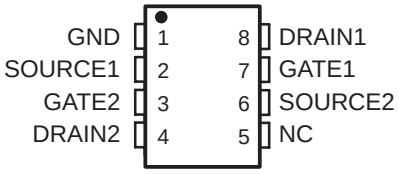

NC − No internal connection

description

The TPIC5203 is a monolithic gate-protected power DMOS array that consists of two independent electrically isolated N-channel enhancement-mode DMOS transistors. Each transistor features integrated high-current zener diodes (Z_{CXa} and Z_{CXb}) to prevent gate damage in the event that an overstress condition occurs. These zener diodes also provide up to 4000 V of ESD protection when tested using the human-body model of a 100-pF capacitor in series with a 1.5-kΩ resistor.

The TPIC5203 is offered in a standard eight-pin small-outline surface-mount (D) package and is characterized for operation over the case temperature range of −40°C to 125°C.

schematic

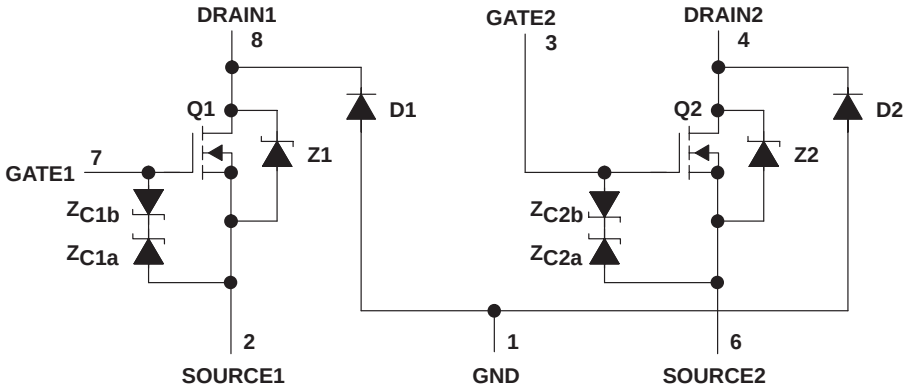

NOTE: For correct operation, no terminal pin may be taken below GND.

PRODUCTION DATA information is current as of publication date. Products conform to specifications per the terms of Texas Instruments standard warranty. Production processing does not necessarily include testing of all parameters.

Copyright © 1994, Texas Instruments Incorporated

absolute maximum ratings over operating case temperature range (unless otherwise noted)†

Drain-to-source voltage, V_{DS}	60 V
Source-to-GND voltage (Q1, Q2)	100 V
Drain-to-GND voltage (Q1, Q2)	100 V
Gate-to-source voltage range, V_{GS}	−9 V to 18 V
Continuous drain current, each output, T_C = 25°C	1.6 A
Continuous source-to-drain diode current, T_C = 25°C	1.6 A
Pulsed drain current, each output, I_{max}, T_C = 25°C (see Note 1 and Figure 15)	8 A
Continuous gate-to-source zener diode current, T_C = 25°C	±50 mA
Pulsed gate-to-source zener-diode current, T_C = 25°C	±500 mA
Single-pulse avalanche energy, E_{AS}, T_C = 25°C (see Figures 4, 15, and 16)	21.6 mJ
Continuous total dissipation, T_C = 25°C (see Figure 15)	962 mW
Operating virtual junction temperature range, T_J	−40°C to 150°C
Operating case temperature range, T_C	−40°C to 125°C
Storage temperature range, T_{stg}	−65°C to 150°C
Lead temperature 1,6 mm (1/16 inch) from case for 10 seconds	260°C

† Stresses beyond those listed under “absolute maximum ratings” may cause permanent damage to the device. These are stress ratings only, and functional operation of the device at these or any other conditions beyond those indicated under “recommended operating conditions” is not implied. Exposure to absolute-maximum-rated conditions for extended periods may affect device reliability.

NOTE 1: Pulse duration = 10 ms, duty cycle = 2%

electrical characteristics, T_C = 25°C (unless otherwise noted)

PARAMETER		TEST CONDITIONS		MIN	TYP	MAX	UNIT
$V_{(BR)DSX}$	Drain-to-source breakdown voltage	I_D = 250 µA, V_{GS} = 0		60			V
$V_{GS(th)}$	Gate-to-source threshold voltage	I_D = 1 mA, See Figure 5	V_{DS} = V_{GS},	1.5	2.05	2.2	V
$V_{(BR)GS}$	Gate-to-source breakdown voltage	I_{GS} = 250 µA		18			V
$V_{(BR)SG}$	Source-to-gate breakdown voltage	I_{SG} = 250 µA		9			V
$V_{(BR)}$	Reverse drain-to-GND breakdown voltage (across D1, D2)	Drain-to-GND current = 250 µA		100			V
$V_{DS(on)}$	Drain-to-source on-state voltage	I_D = 1.6 A, See Notes 2 and 3	V_{GS} = 10 V,		0.42	0.5	V
$V_{F(SD)}$	Forward on-state voltage, source-to-drain	I_S = 1.6 A, V_{GS} = 0 (Z1, Z2), See Notes 2 and 3 and Figure 12			1	1.2	V
V_F	Forward on-state voltage, GND-to-drain	I_D = 1.6 A (D1, D2), See Notes 2 and 3			5		V
I_{DSS}	Zero-gate-voltage drain current	V_{DS} = 48 V, V_{GS} = 0	T_C = 25°C		0.05	1	µA
			T_C = 125°C		0.5	10	
I_{GSSF}	Forward-gate current, drain short circuited to source	V_{GS} = 15 V,	V_{DS} = 0		20	200	nA
I_{GSSR}	Reverse-gate current, drain short circuited to source	V_{SG} = 5 V,	V_{DS} = 0		10	100	nA
I_{lkg}	Leakage current, drain-to-GND	V_{DGND} = 48 V	T_C = 25°C		0.05	1	µA
			T_C = 125°C		0.5	10	
$r_{DS(on)}$	Static drain-to-source on-state resistance	V_{GS} = 10 V, I_D = 1.6 A, See Notes 2 and 3 and Figures 6 and 7	T_C = 25°C		0.26	0.31	Ω
			T_C = 125°C		0.41	0.45	
g_{fs}	Forward transconductance	V_{DS} = 15 V, See Notes 2 and 3 and Figure 9	I_D = 800 mA,	1.5	1.83		S
C_{iss}	Short-circuit input capacitance, common source	V_{DS} = 25 V, f = 1 MHz,	V_{GS} = 0, See Figure 11		150	275	pF
C_{oss}	Short-circuit output capacitance, common source				100	150	
C_{rss}	Short-circuit reverse transfer capacitance, common source				40	125	

NOTES: 2. Technique should limit $T_J - T_C$ to 10°C maximum.
3. These parameters are measured with voltage-sensing contacts separate from the current-carrying contacts.

source-to-drain and GND-to-drain diode characteristics, T_C = 25°C

PARAMETER		TEST CONDITIONS			MIN	TYP	MAX	UNIT
t_{rr}	Reverse-recovery time	I_S = 800 mA, V_{GS} = 0, See Figures 1 and 14	V_{DS} = 48 V, di/dt = 100 A/µs,	Z1 and Z2		50		ns
				D1 and D2		265		
Q_{RR}	Total diode charge			Z1 and Z2		63		nC
				D1 and D2		1240		

resistive-load switching characteristics, T_C = 25°C

PARAMETER		TEST CONDITIONS			MIN	TYP	MAX	UNIT
$t_{d(on)}$	Turn-on delay time	V_{DD} = 25 V, t_{dis} = 10 ns,	R_L = 30 Ω, See Figure 2	t_{en} = 10 ns,		25	50	ns
$t_{d(off)}$	Turn-off delay time					27	50	
t_r	Rise time					15	30	
t_f	Fall time					7	15	
Q_g	Total gate charge	V_{DS} = 48 V, See Figure 3	I_D = 0.8 A,	V_{GS} = 10 V,		4.7	5.9	nC
$Q_{gs(th)}$	Threshold gate-to-source charge					0.5	0.6	
Q_{gd}	Gate-to-drain charge					1.9	2.4	
L_D	Internal drain inductance					5		nH
L_S	Internal source inductance					5		
R_g	Internal gate resistance					0.25		Ω

thermal resistance

PARAMETER		TEST CONDITIONS	MIN	TYP	MAX	UNIT
$R_{\theta JA}$	Junction-to-ambient thermal resistance	See Notes 4 and 7		130		°C/W
$R_{\theta JB}$	Junction-to-board thermal resistance	See Notes 5 and 7		79		
$R_{\theta JP}$	Junction-to-pin thermal resistance	See Notes 6 and 7		34		

NOTES: 4. Package mounted on an FR4 printed-circuit board with no heatsink
5. Package mounted on a 24 inch^2, 4-layer FR4 printed-circuit board
6. Package mounted in intimate contact with infinite heatsink
7. All outputs with equal power

PARAMETER MEASUREMENT INFORMATION

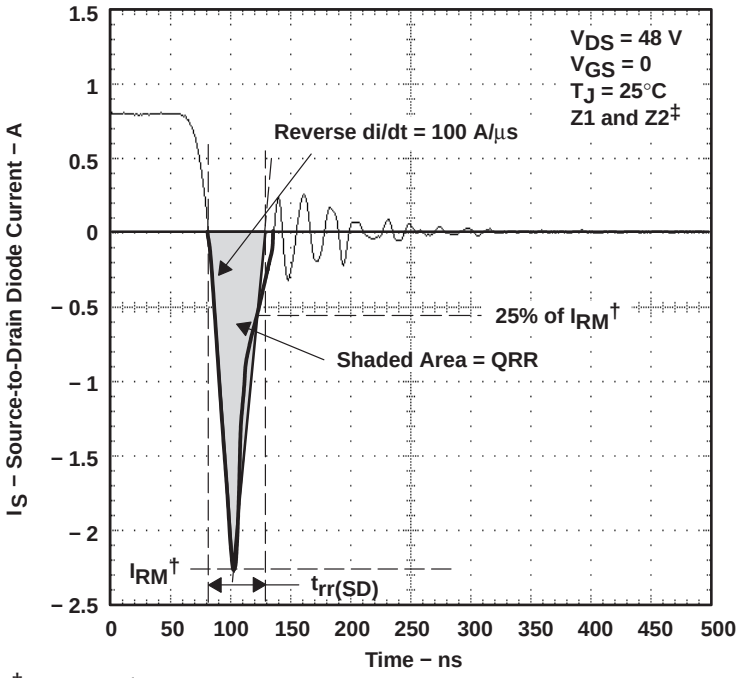

† I_{RM} = maximum recovery current
‡ The above waveform is representative of D1 and D2 in shape only.

Figure 1. Reverse-Recovery-Current Waveform of Source-to-Drain Diode

TEXAS INSTRUMENTS
POST OFFICE BOX 655303 • DALLAS, TEXAS 75265
POST OFFICE BOX 1443 • HOUSTON, TEXAS 77251−1443

PARAMETER MEASUREMENT INFORMATION

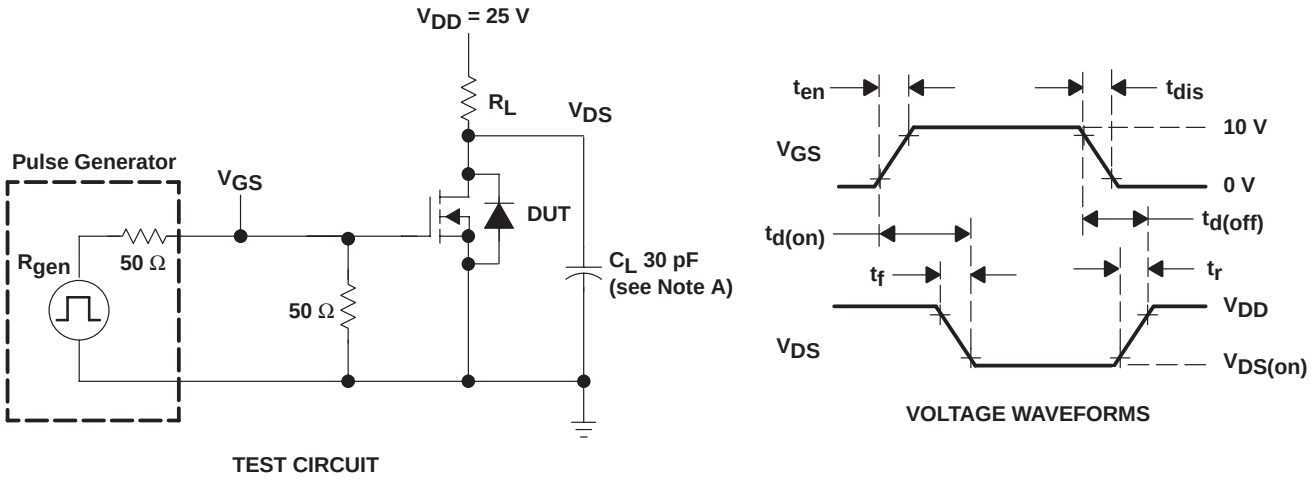

NOTE A: C_L includes probe and jig capacitance.

Figure 2. Resistive-Switching Test Circuit and Voltage Waveforms

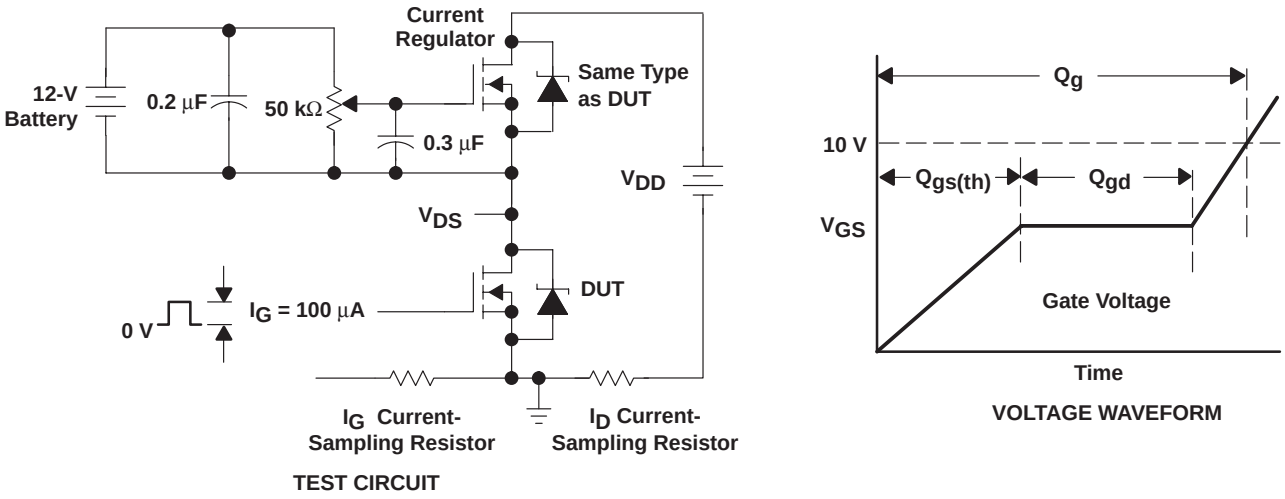

Figure 3. Gate-Charge Test Circuit and Voltage Waveform

PARAMETER MEASUREMENT INFORMATION

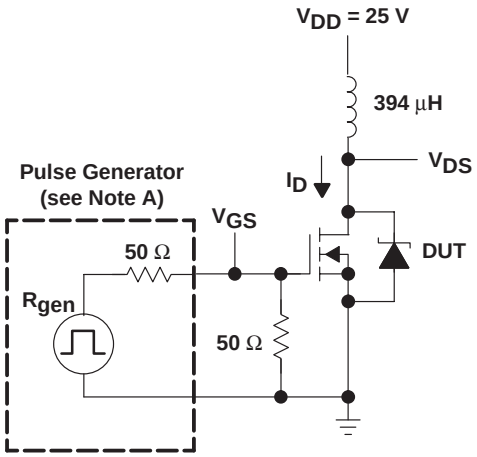

TEST CIRCUIT

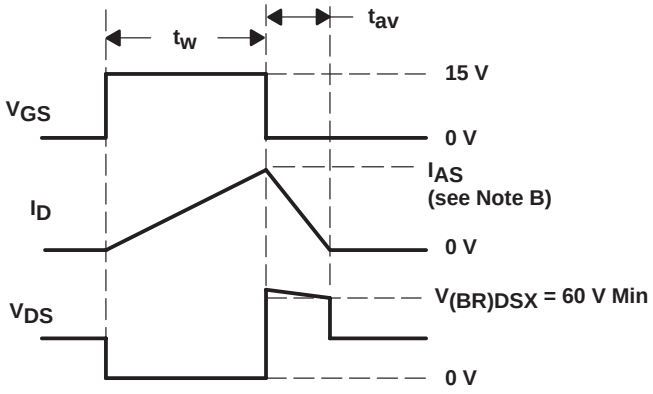

VOLTAGE AND CURRENT WAVEFORMS

NOTES: A. The pulse generator has the following characteristics: $t_r \le 10$ ns, $t_f \le 10$ ns, $Z_O = 50\ \Omega$.
B. Input pulse duration (t_w) is increased until peak current I_{AS} = 8 A.

Energy test level is defined as $E_{AS} = \dfrac{I_{AS} \times V_{(BR)DSX} \times t_{av}}{2} = 21.6$ mJ.

Figure 4. Single-Pulse Avalanche Energy Test Circuit and Waveforms

TYPICAL CHARACTERISTICS

GATE-TO-SOURCE THRESHOLD VOLTAGE vs JUNCTION TEMPERATURE

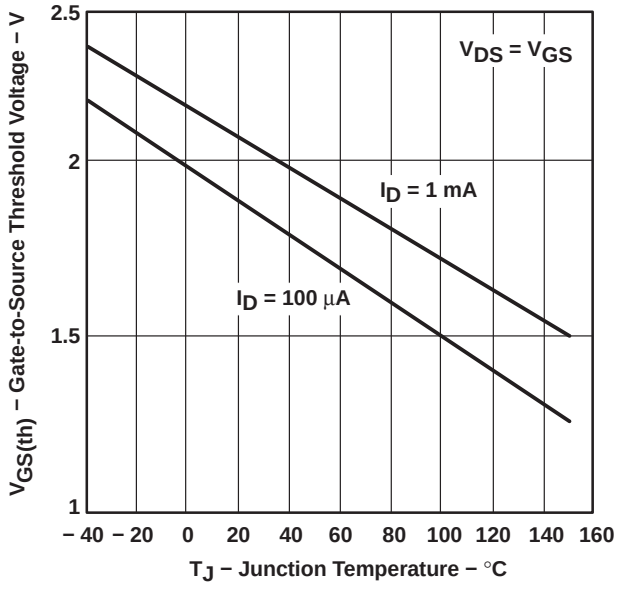

Figure 5

STATIC DRAIN-TO-SOURCE ON-STATE RESISTANCE vs JUNCTION TEMPERATURE

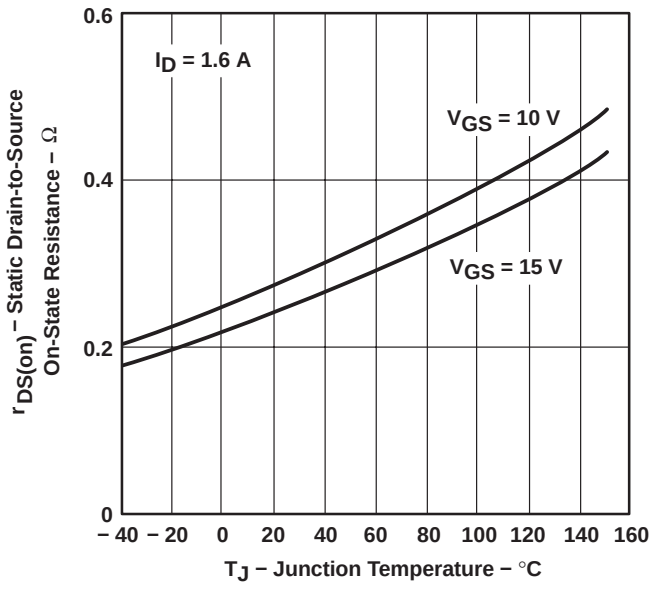

Figure 6

TEXAS INSTRUMENTS
POST OFFICE BOX 655303 • DALLAS, TEXAS 75265
POST OFFICE BOX 1443 • HOUSTON, TEXAS 77251−1443

TYPICAL CHARACTERISTICS

STATIC DRAIN-TO-SOURCE ON-STATE RESISTANCE vs DRAIN CURRENT

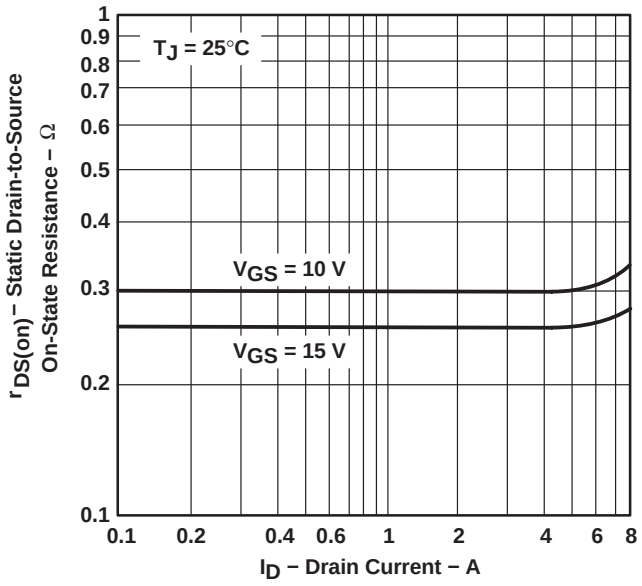

Figure 7

DRAIN CURRENT vs DRAIN-TO-SOURCE VOLTAGE

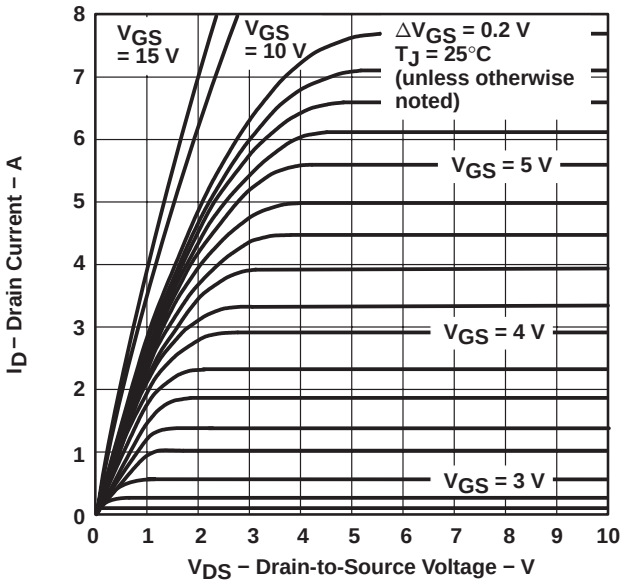

Figure 8

DISTRIBUTION OF FORWARD TRANSCONDUCTANCE

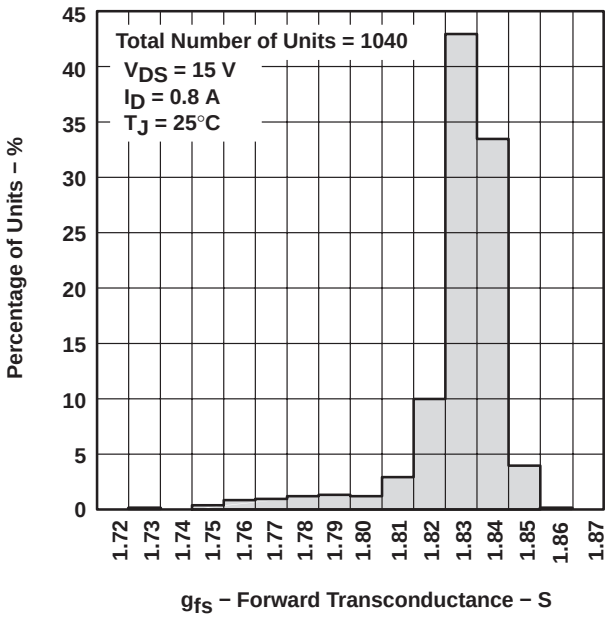

Figure 9

DRAIN CURRENT vs GATE-TO-SOURCE VOLTAGE

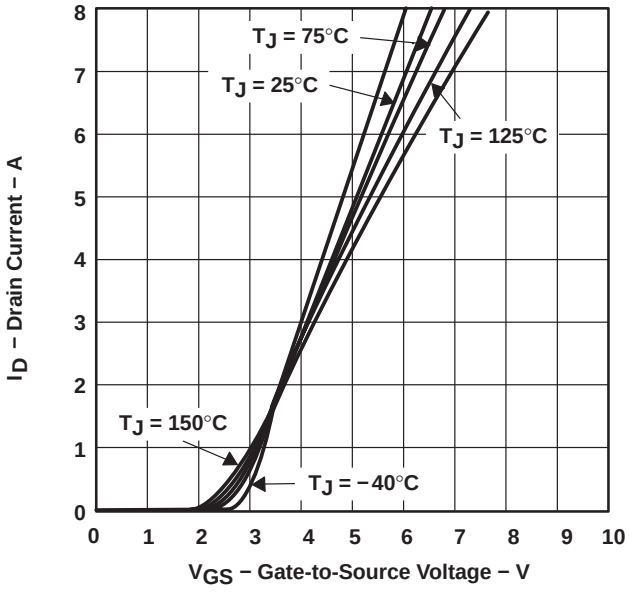

Figure 10

TYPICAL CHARACTERISTICS

CAPACITANCE vs DRAIN-TO-SOURCE VOLTAGE

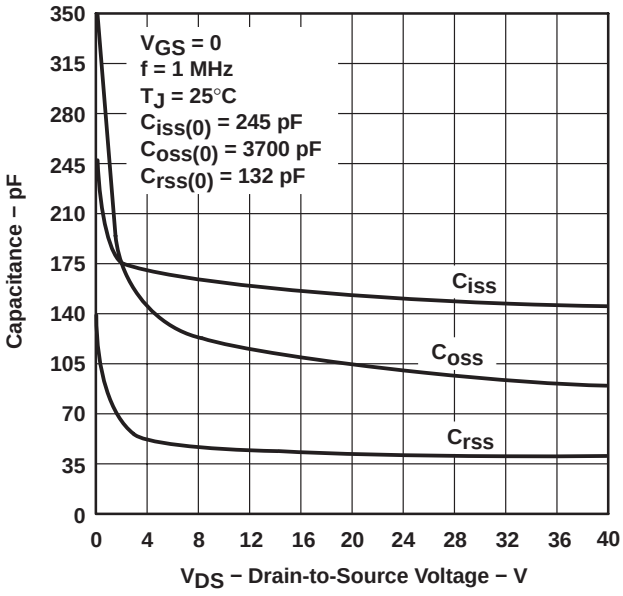

Figure 11

SOURCE-TO-DRAIN DIODE CURRENT vs SOURCE-TO-DRAIN VOLTAGE

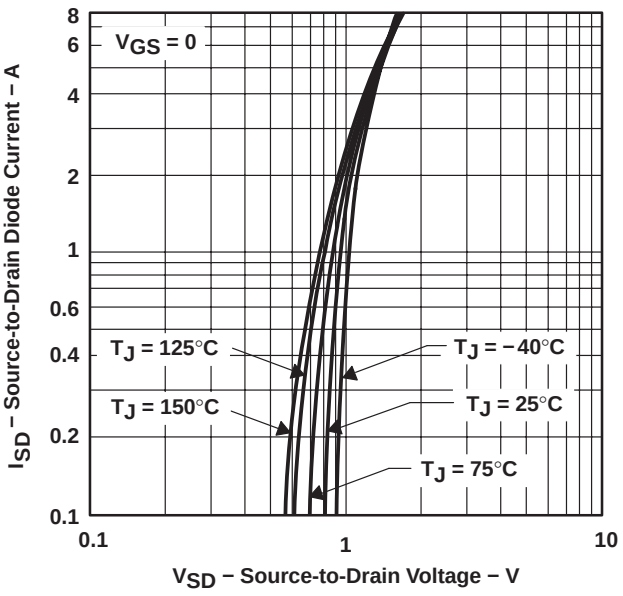

Figure 12

DRAIN-TO-SOURCE VOLTAGE AND GATE-TO-SOURCE VOLTAGE vs GATE CHARGE

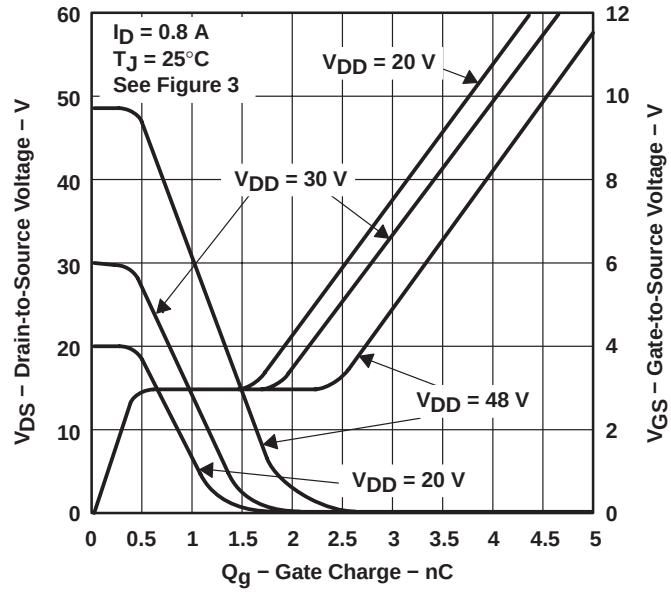

Figure 13

REVERSE RECOVERY TIME vs REVERSE di/dt

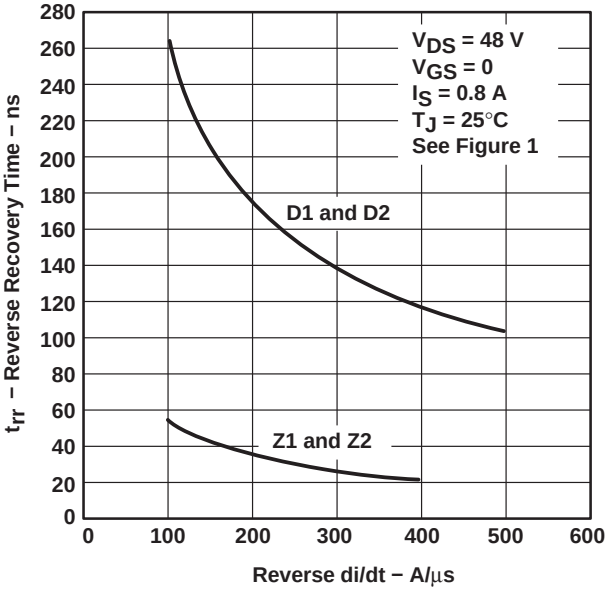

Figure 14

TEXAS INSTRUMENTS
POST OFFICE BOX 655303 • DALLAS, TEXAS 75265
POST OFFICE BOX 1443 • HOUSTON, TEXAS 77251−1443

THERMAL INFORMATION

MAXIMUM DRAIN CURRENT
vs
DRAIN-TO-SOURCE VOLTAGE

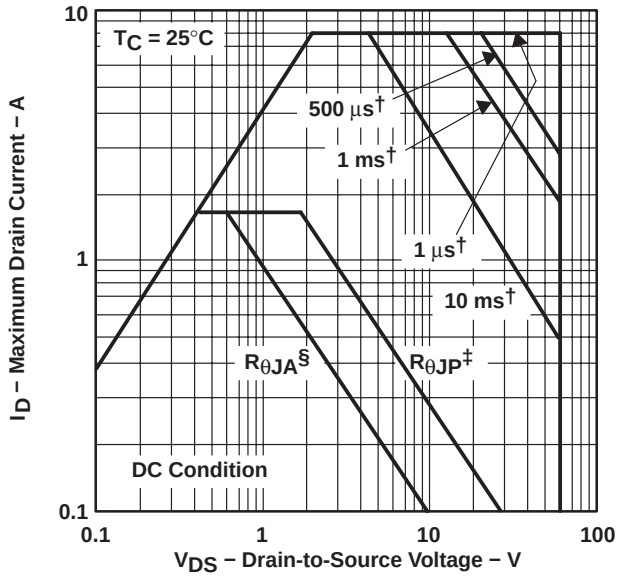

† Less than 2% duty cycle
‡ Device mounted in intimate contact with infinite heatsink.
§ Device mounted on FR4 printed circuit board with no heatsink.

Figure 15

MAXIMUM PEAK AVALANCHE CURRENT
vs
TIME DURATION OF AVALANCHE

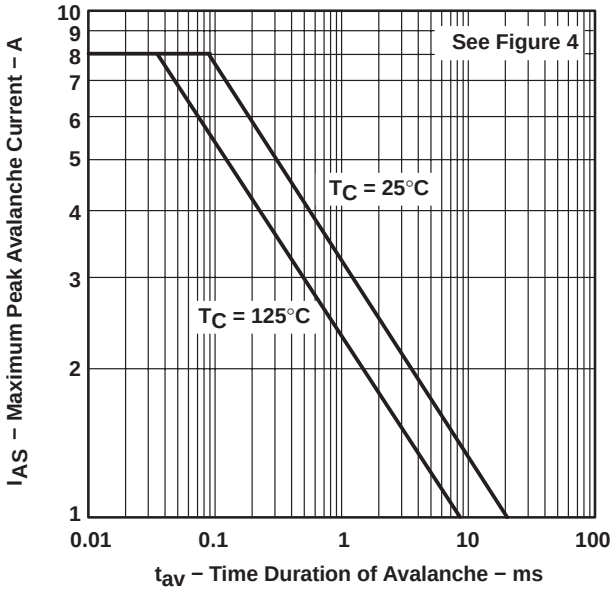

Figure 16

THERMAL INFORMATION

D PACKAGE†
JUNCTION-TO-BOARD THERMAL RESISTANCE
vs
PULSE DURATION

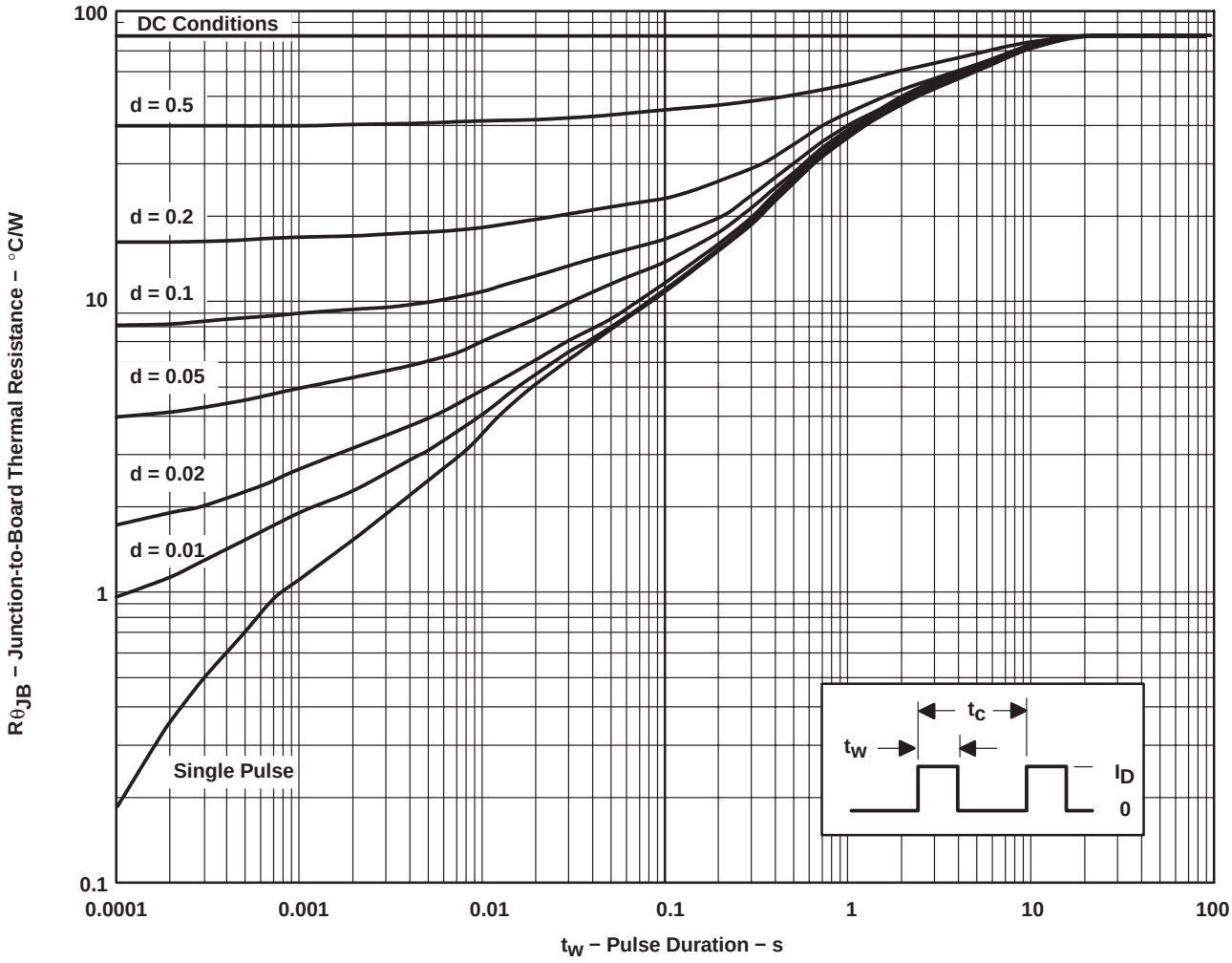

† Device mounted on 24 in^2, 4-layer FR4 printed-circuit board with no heatsink

NOTE A. $Z_{\theta JB}(t) = r(t)R_{\theta JB}$
t_W = pulse duration
t_C = cycle time
d = duty cycle = t_W/t_C

Figure 17

TEXAS INSTRUMENTS
POST OFFICE BOX 655303 • DALLAS, TEXAS 75265
POST OFFICE BOX 1443 • HOUSTON, TEXAS 77251−1443

PACKAGING INFORMATION

Orderable Device	Status (1)	Package Type	Package Drawing	Pins	Package Qty	Eco Plan (2)	Lead/Ball Finish	MSL Peak Temp (3)
TPIC5203D	OBSOLETE	SOIC	D	8		TBD	Call TI	Call TI

(1) The marketing status values are defined as follows:
ACTIVE: Product device recommended for new designs.
LIFEBUY: TI has announced that the device will be discontinued, and a lifetime-buy period is in effect.
NRND: Not recommended for new designs. Device is in production to support existing customers, but TI does not recommend using this part in a new design.
PREVIEW: Device has been announced but is not in production. Samples may or may not be available.
OBSOLETE: TI has discontinued the production of the device.

(2) Eco Plan - The planned eco-friendly classification: Pb-Free (RoHS) or Green (RoHS & no Sb/Br) - please check http://www.ti.com/productcontent for the latest availability information and additional product content details.
TBD: The Pb-Free/Green conversion plan has not been defined.
Pb-Free (RoHS): TI's terms "Lead-Free" or "Pb-Free" mean semiconductor products that are compatible with the current RoHS requirements for all 6 substances, including the requirement that lead not exceed 0.1% by weight in homogeneous materials. Where designed to be soldered at high temperatures, TI Pb-Free products are suitable for use in specified lead-free processes.
Green (RoHS & no Sb/Br): TI defines "Green" to mean Pb-Free (RoHS compatible), and free of Bromine (Br) and Antimony (Sb) based flame retardants (Br or Sb do not exceed 0.1% by weight in homogeneous material)

(3) MSL, Peak Temp. -- The Moisture Sensitivity Level rating according to the JEDEC industry standard classifications, and peak solder temperature.

Important Information and Disclaimer: The information provided on this page represents TI's knowledge and belief as of the date that it is provided. TI bases its knowledge and belief on information provided by third parties, and makes no representation or warranty as to the accuracy of such information. Efforts are underway to better integrate information from third parties. TI has taken and continues to take reasonable steps to provide representative and accurate information but may not have conducted destructive testing or chemical analysis on incoming materials and chemicals. TI and TI suppliers consider certain information to be proprietary, and thus CAS numbers and other limited information may not be available for release.

In no event shall TI's liability arising out of such information exceed the total purchase price of the TI part(s) at issue in this document sold by TI to Customer on an annual basis.

D (R–PDSO–G8) PLASTIC SMALL OUTLINE

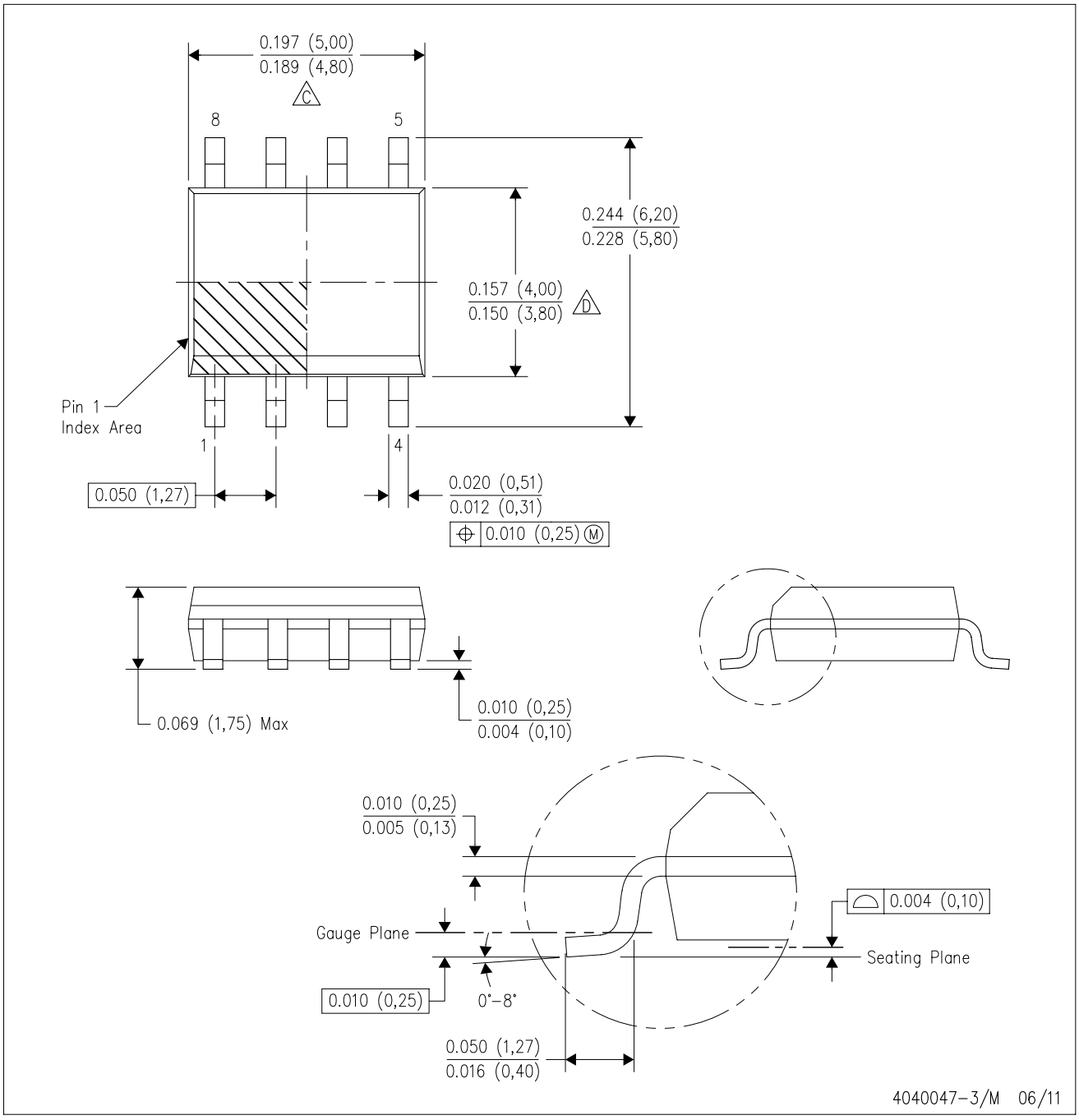

NOTES:
A. All linear dimensions are in inches (millimeters).
B. This drawing is subject to change without notice.
C. Body length does not include mold flash, protrusions, or gate burrs. Mold flash, protrusions, or gate burrs shall not exceed 0.006 (0,15) each side.
D. Body width does not include interlead flash. Interlead flash shall not exceed 0.017 (0,43) each side.
E. Reference JEDEC MS–012 variation AA.

IMPORTANT NOTICE

Texas Instruments Incorporated and its subsidiaries (TI) reserve the right to make corrections, modifications, enhancements, improvements, and other changes to its products and services at any time and to discontinue any product or service without notice. Customers should obtain the latest relevant information before placing orders and should verify that such information is current and complete. All products are sold subject to TI's terms and conditions of sale supplied at the time of order acknowledgment.

TI warrants performance of its hardware products to the specifications applicable at the time of sale in accordance with TI's standard warranty. Testing and other quality control techniques are used to the extent TI deems necessary to support this warranty. Except where mandated by government requirements, testing of all parameters of each product is not necessarily performed.

TI assumes no liability for applications assistance or customer product design. Customers are responsible for their products and applications using TI components. To minimize the risks associated with customer products and applications, customers should provide adequate design and operating safeguards.

TI does not warrant or represent that any license, either express or implied, is granted under any TI patent right, copyright, mask work right, or other TI intellectual property right relating to any combination, machine, or process in which TI products or services are used. Information published by TI regarding third-party products or services does not constitute a license from TI to use such products or services or a warranty or endorsement thereof. Use of such information may require a license from a third party under the patents or other intellectual property of the third party, or a license from TI under the patents or other intellectual property of TI.

Reproduction of TI information in TI data books or data sheets is permissible only if reproduction is without alteration and is accompanied by all associated warranties, conditions, limitations, and notices. Reproduction of this information with alteration is an unfair and deceptive business practice. TI is not responsible or liable for such altered documentation. Information of third parties may be subject to additional restrictions.

Resale of TI products or services with statements different from or beyond the parameters stated by TI for that product or service voids all express and any implied warranties for the associated TI product or service and is an unfair and deceptive business practice. TI is not responsible or liable for any such statements.

TI products are not authorized for use in safety-critical applications (such as life support) where a failure of the TI product would reasonably be expected to cause severe personal injury or death, unless officers of the parties have executed an agreement specifically governing such use. Buyers represent that they have all necessary expertise in the safety and regulatory ramifications of their applications, and acknowledge and agree that they are solely responsible for all legal, regulatory and safety-related requirements concerning their products and any use of TI products in such safety-critical applications, notwithstanding any applications-related information or support that may be provided by TI. Further, Buyers must fully indemnify TI and its representatives against any damages arising out of the use of TI products in such safety-critical applications.

TI products are neither designed nor intended for use in military/aerospace applications or environments unless the TI products are specifically designated by TI as military-grade or "enhanced plastic." Only products designated by TI as military-grade meet military specifications. Buyers acknowledge and agree that any such use of TI products which TI has not designated as military-grade is solely at the Buyer's risk, and that they are solely responsible for compliance with all legal and regulatory requirements in connection with such use.

TI products are neither designed nor intended for use in automotive applications or environments unless the specific TI products are designated by TI as compliant with ISO/TS 16949 requirements. Buyers acknowledge and agree that, if they use any non-designated products in automotive applications, TI will not be responsible for any failure to meet such requirements.

Following are URLs where you can obtain information on other Texas Instruments products and application solutions:

Products		**Applications**	
Audio	www.ti.com/audio	Communications and Telecom	www.ti.com/communications
Amplifiers	amplifier.ti.com	Computers and Peripherals	www.ti.com/computers
Data Converters	dataconverter.ti.com	Consumer Electronics	www.ti.com/consumer-apps
DLP® Products	www.dlp.com	Energy and Lighting	www.ti.com/energy
DSP	dsp.ti.com	Industrial	www.ti.com/industrial
Clocks and Timers	www.ti.com/clocks	Medical	www.ti.com/medical
Interface	interface.ti.com	Security	www.ti.com/security
Logic	logic.ti.com	Space, Avionics and Defense	www.ti.com/space-avionics-defense
Power Mgmt	power.ti.com	Transportation and Automotive	www.ti.com/automotive
Microcontrollers	microcontroller.ti.com	Video and Imaging	www.ti.com/video
RFID	www.ti-rfid.com	Wireless	www.ti.com/wireless-apps
RF/IF and ZigBee® Solutions	www.ti.com/lprf		
	TI E2E Community Home Page		e2e.ti.com

Mailing Address: Texas Instruments, Post Office Box 655303, Dallas, Texas 75265
Copyright © 2011, Texas Instruments Incorporated