TPD3S014-Q1 Current Limit Switch and D+/D– ESD Protection for Automotive USB Host Ports

1 Features

- AEC-Q100 Qualified (Grade 2)
  - Ambient Temperature Range: –40°C to +105°C
- Continuous Current Rating of 0.5 A
- Fixed, Constant Current Limits of 0.85 A (typical)
- Fast Overcurrent Response – 2 µs
- Integrated Output Discharge
- Reverse Current Blocking
- Short-Circuit Protection
- Over Temperature Protection With Auto-Restart
- Built-In Soft Start
- IEC 61000-4-2 Level 4 ESD Protection (External Pins)
  - ±12-kV Contact Discharge (IEC 61000-4-2)
  - ±15-kV Air Gap Discharge (IEC 61000-4-2)
- ISO 10605 330-pF, 330-Ω ESD Protection (External Pins)
  - ±8-kV Contact Discharge
  - ±15-kV Air Gap Discharge
- 6-Pin SOT-23 Package (2.90 mm × 1.60 mm)

2 Applications

- End Equipment:
  - Head Units
  - Rear Seat Entertainment
  - Telematics
  - USB Hubs
  - Navigation Module
- Interfaces:
  - USB 2.0
  - USB 3.0

3 Description

The TPD3S014-Q1 is an integrated device that features a current-limited load switch and a two-channel transient voltage suppressor (TVS) based electrostatic discharge (ESD) protection diode array for USB interfaces.

The TPD3S014-Q1 device is intended for applications such as USB where heavy capacitive loads and short-circuits are likely to be encountered; the TPD3S014-Q1 provides short-circuit protection and overcurrent protection. The TPD3S014-Q1 limits the output current to a safe level by operating in constant current mode when the output load exceeds the current limit threshold. The fast overload response eases the burden on the main 5 V power supply by quickly regulating the power when the output is shorted. The rise and fall times for the current limit switch are controlled to minimize current surges when turning the device on and off.

The TPD3S014-Q1 allows 0.5 A of continuous current. The TVS diode array is rated to dissipate ESD strikes above the maximum level specified in the IEC 61000-4-2 international standard.

The high level of integration, combined with its easy-to-route DBV package, allows this device to provide great circuit protection for USB interfaces in applications like head units, USB hubs, and media interfaces.

Device Information[1]

PART NUMBER	PACKAGE	BODY SIZE (NOM)
TPD3S014-Q1	SOT-23 (6)	2.90 mm × 1.60 mm

(1) For all available packages, see the orderable addendum at the end of the data sheet.

Simplified Schematic

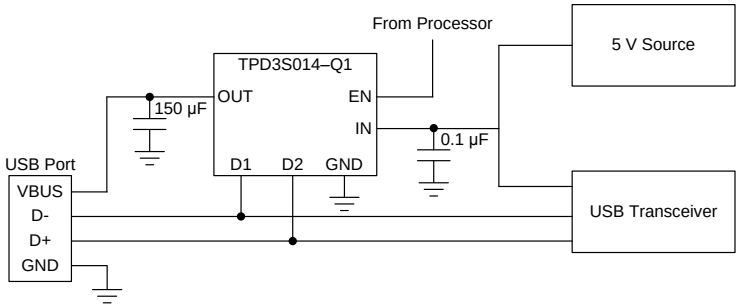

Copyright © 2016, Texas Instruments Incorporated

An IMPORTANT NOTICE at the end of this data sheet addresses availability, warranty, changes, use in safety-critical applications, intellectual property matters and other important disclaimers. PRODUCTION DATA.

Table of Contents

1 Features ... 1
2 Applications ... 1
3 Description ... 1
4 Revision History ... 2
5 Pin Configuration and Functions ... 3
6 Specifications ... 4
6.1 Absolute Maximum Ratings ... 4
6.2 ESD Ratings—AEC Specification ... 4
6.3 ESD Ratings—IEC Specification ... 4
6.4 ESD Ratings—ISO Specification ... 4
6.5 Recommended Operating Conditions ... 4
6.6 Thermal Information ... 5
6.7 Electrical Characteristics: $T_J = T_A = 25°C$ ... 5
6.8 Electrical Characteristics: $–40°C \le T_A \le 105°C$ ... 6
6.9 Typical Characteristics ... 7
7 Parameter Measurement Information ... 10
8 Detailed Description ... 11
8.1 Overview ... 11
8.2 Functional Block Diagram ... 11
8.3 Feature Description ... 11
8.4 Device Functional Modes ... 14
9 Application and Implementation ... 15
9.1 Application Information ... 15
9.2 Typical Application ... 15
10 Power Supply Recommendations ... 18
11 Layout ... 18
11.1 Layout Guidelines ... 18
11.2 Layout Example ... 18
11.3 Power Dissipation and Junction Temperature ... 19
12 Device and Documentation Support ... 21
12.1 Documentation Support ... 21
12.2 Community Resources ... 21
12.3 Trademarks ... 21
12.4 Electrostatic Discharge Caution ... 21
12.5 Glossary ... 21
13 Mechanical, Packaging, and Orderable Information ... 21

4 Revision History

NOTE: Page numbers for previous revisions may differ from page numbers in the current version.

Changes from Revision A (April 2016) to Revision B — **Page**

- Made changes to the *Electrical Characteristics: $–40°C \le T_A \le 105°C$* table. Changed T_A from 125°C to 105°C ... 1
- Changed Temperature from 125°C to 105°C in *Power Dissipation and Junction Temperature* section ... 1

Changes from Original (March 2016) to Revision A — **Page**

- Changed device status from *Product Preview* to *Production Data* ... 1

Copyright © 2016, Texas Instruments Incorporated

5 Pin Configuration and Functions

DBV Package
6-Pin SOT-23
Top View

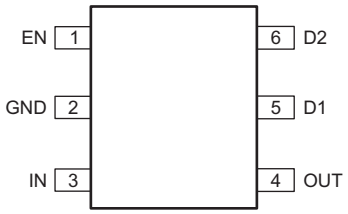

Pin Functions

PIN		I/O	DESCRIPTION
NAME	NO.		
D1	5	I/O	USB data+ or USB data–
D2	6		
EN	1	I	Enable input, logic high turns on power switch
GND	2	—	Ground
IN	3	I	Input voltage and power-switch drain; Connect a 0.1-µF or greater ceramic capacitor from IN to GND close to the IC
OUT	4	O	Power-switch output, connect to load

Copyright © 2016, Texas Instruments Incorporated

6 Specifications

6.1 Absolute Maximum Ratings

over operating free-air temperature range (unless otherwise noted) (1)(2)

		MIN	MAX	UNIT
Input voltage (3)	V_{IN}	–0.3	6	V
	V_{OUT}	–0.3	6	
	EN	–0.3	6	
	D1	–0.3	6	
	D2	–0.3	6	
Voltage from V_{IN} to V_{OUT}		–6	6	V
Junction temperature	T_J	Internally limited		
Storage temperature	T_{stg}	–65	150	°C

(1) Stresses beyond those listed under *Absolute Maximum Ratings* may cause permanent damage to the device. These are stress ratings only, which do not imply functional operation of the device at these or any other conditions beyond those indicated under *Recommended Operating Conditions*. Exposure to absolute-maximum-rated conditions for extended periods may affect device reliability.
(2) Voltages are with respect to GND unless otherwise noted.
(3) See the *Input and Output Capacitance* section.

6.2 ESD Ratings—AEC Specification

			VALUE	UNIT
$V_{(ESD)}$	Electrostatic discharge	Human-body model (HBM), per AEC Q100-002 (1)	±2000	V
		Charged-device model (CDM), per AEC Q100-011	±500	

(1) AEC Q100-002 indicates that HBM stressing shall be in accordance with the ANSI/ESDA/JEDEC JS-001 specification.

6.3 ESD Ratings—IEC Specification

				VALUE	UNIT
$V_{(ESD)}$	Electrostatic discharge	IEC 61000-4-2, V_{OUT}, Dx pins	Contact discharge (1)	±12000	V
			Air-gap discharge (1)	±15000	

(1) V_{OUT} was tested on a PCB with input and output bypassing capacitors of 0.1 µF and 120 µF, respectively.

6.4 ESD Ratings—ISO Specification

				VALUE	UNIT
$V_{(ESD)}$	Electrostatic discharge	ISO 10605 330 pF, 330 Ω, V_{OUT}, Dx pins	Contact discharge (1)	±8000	V
			Air-gap discharge (1)	±15000	

(1) V_{OUT} was tested on a PCB with input and output bypassing capacitors of 0.1 µF and 120 µF, respectively.

6.5 Recommended Operating Conditions

over operating free-air temperature range (unless otherwise noted)

		MIN	MAX	UNIT
V_{IN}	Input voltage	4.5	5.5	V
V_{EN}	Input voltage, EN	0	5.5	V
V_{IH}	High-level Input voltage, EN	2		V
V_{IL}	Low-level Input voltage, EN		0.7	V
C_{IN}	Input decoupling capacitance, IN to GND	0.1		µF
I_{OUT} (1)	Continuous output current (TPD3S014-Q1)		0.5	A
T_J	Operating junction temperature	–40	125	°C

(1) Package and current ratings may require an ambient temperature derating of 85°C

Copyright © 2016, Texas Instruments Incorporated

6.6 Thermal Information

THERMAL METRIC[1]		TPD3S014-Q1 DBV (SOT-23) 6 PINS	UNIT
$R_{\theta JA}$	Junction-to-ambient thermal resistance	185.8	°C/W
$R_{\theta JC(top)}$	Junction-to-case (top) thermal resistance	124.7	°C/W
$R_{\theta JB}$	Junction-to-board thermal resistance	32.0	°C/W
ψ_{JT}	Junction-to-top characterization parameter	23.7	°C/W
ψ_{JB}	Junction-to-board characterization parameter	31.5	°C/W
$R_{\theta JC(bot)}$	Junction-to-case (bottom) thermal resistance	N/A	°C/W
$R_{\theta JA}$ (Custom)	See the *Power Dissipation and Junction Temperature* section	120.3	°C/W

(1) For more information about traditional and new thermal metrics, see the *Semiconductor and IC Package Thermal Metrics* application report, SPRA953.

6.7 Electrical Characteristics: $T_J = T_A = 25°C$

V_{IN} = 5 V, $V_{EN} = V_{IN}$, I_{OUT} = 0 A (unless otherwise noted). Parameters over a wider operational range are shown in *Electrical Characteristics: –40°C ≤ T_A ≤ 105°C* table.

PARAMETER		TEST CONDITIONS[1]	MIN	TYP	MAX	UNIT
POWER SWITCH						
$R_{DS(on)}$	Input – Output resistance			97	120	mΩ
		–40°C ≤ (T_J, T_A) ≤ +85°C		97	140	
CURRENT LIMIT						
I_{OS}[2]	Current limit, see Figure 23		0.67	0.85	1.01	A
SUPPLY CURRENT						
I_{SD}	Supply current, switch disabled	I_{OUT} = 0 A		0.02	1	µA
		–40°C ≤ (T_J, T_A) ≤ +85°C, V_{IN} = 5.5 V, I_{OUT} = 0 A			2	
I_{SE}	Supply current, switch enabled	I_{OUT} = 0 A		66	74	µA
		–40°C ≤ (T_J, T_A) ≤ +85°C, V_{IN} = 5.5 V, I_{OUT} = 0 A			85	
I_{REV}	Reverse leakage current	V_{OUT} = 5 V, V_{IN} = 0 V, Measure I_{VOUT}		0.2	1	µA
		–40°C ≤ (T_J, T_A) ≤ +85°C, V_{OUT} = 5 V, V_{IN} = 0 V, Measure I_{VOUT}			5	
OUTPUT DISCHARGE						
R_{PD}	Output pull-down resistance[3]	$V_{IN} = V_{OUT}$ = 5 V, disabled	400	456	600	Ω
ESD PROTECTION						
ΔC_{IO}	Differential capacitance between the D1, D2 lines	f = 1 MHz, V_{IO} = 2.5 V		0.02		pF
C_{IO}	(D1, D2 to GND)	f = 1 MHz, V_{IO} = 2.5 V		1.4		pF
R_{DYN}	Dynamic on-resistance D1, D2 IEC clamps[4]	Dx to GND		0.2		Ω
		GND to Dx		0.2		Ω

(1) Pulsed testing techniques maintain junction temperature approximately equal to ambient temperature
(2) See the *Current Limit* for explanation of this parameter.
(3) These Parameters are provided for reference only, and do not constitute a part of TI's published device specifications for purposes of TI's product warranty.
(4) RDYN was extracted using the least squares first of the TLP characteristics between I = 20 A and I = 30 A.

Copyright © 2016, Texas Instruments Incorporated

6.8 Electrical Characteristics: –40°C ≤ T_A ≤ 105°C

4.5 V ≤ V_{IN} ≤ 5.5 V, V_{EN} = V_{IN}, I_{OUT} = 0 A, typical values are at 5 V and 25°C (unless otherwise noted)

PARAMETER		TEST CONDITIONS(1)	MIN	TYP	MAX	UNIT
POWER SWITCH						
$R_{DS(on)}$	Input – output resistance			97	164	mΩ
ENABLE INPUT (EN)						
	Threshold	Input rising	1	1.45	2	V
	Hysteresis			0.13		V
	Leakage current	V_{EN} = 0 V	–1	0	1	µA
t_{ON}	Turnon time	V_{IN} = 5 V, C_L = 1 µF, R_L = 100 Ω, EN ↑ See Figure 22	1	1.6	2.2	ms
t_{OFF}	Turnoff time	V_{IN} = 5 V, C_L = 1 µF, R_L = 100 Ω, EN ↓ See Figure 22	1.7	2.1	2.7	ms
t_R	Rise time, output	C_L = 1 µF, R_L = 100 Ω, V_{IN} = 5 V, See Figure 21	0.4	0.64	0.9	ms
t_F	Fall time, output	C_L = 1 µF, R_L = 100 Ω, V_{IN} = 5 V, See Figure 21	0.25	0.4	0.8	ms
CURRENT LIMIT						
I_{OS}(2)	Current limit, see Figure 23		0.65	0.85	1.05	A
t_{IOS}	Short-circuit response time(2)	V_{IN} = 5 V (see Figure 23) One Half full load → R_{SHORT} = 50 mΩ Measure from application to when current falls below 120% of final value		2		µs
SUPPLY CURRENT						
I_{SD}	Supply current, switch disabled	I_{OUT} = 0 A		0.02	10	µA
I_{SE}	Supply current, switch enabled	I_{OUT} = 0 A		66	94	µA
I_{REV}	Reverse leakage current	V_{OUT} = 5.5 V, V_{IN} = 0 V, Measure I_{VOUT}		0.2	20	µA
UNDERVOLTAGE LOCKOUT						
V_{UVLO}	Rising threshold	V_{IN}↑	3.5	3.77	4	V
	Hysteresis	V_{IN}↓		0.14		V
OUTPUT DISCHARGE						
R_{PD}	Output pull-down resistance	V_{IN} = 4 V, V_{OUT} = 5 V, Disabled	350	545	1200	Ω
		V_{IN} = 5 V, V_{OUT} = 5 V, Disabled	300	456	800	
THERMAL SHUTDOWN						
T_{SHDN}	Rising threshold (T_J)	In current limit	135			°C
		Not in current limit	155			
	Hysteresis(3)			20		°C
ESD PROTECTION						
I_I	Input leakage current (D1, D2)	V_I = 3.3 V		0.02	1	µA
V_D	Diode forward voltage (D1, D2); Lower clamp diode	I_O = 8 mA			0.95	V
V_{BR}	Breakdown voltage (D1, D2)	I_{BR} = 1 mA	6			V

(1) Pulsed testing techniques maintain junction temperature approximately equal to ambient temperature
(2) See the *Current Limit* section for explanation of this parameter.
(3) These parameters are provided for reference only, and do not constitute part of TI's published device specifications for purposes of TI's product warranty.

Copyright © 2016, Texas Instruments Incorporated

6.9 Typical Characteristics

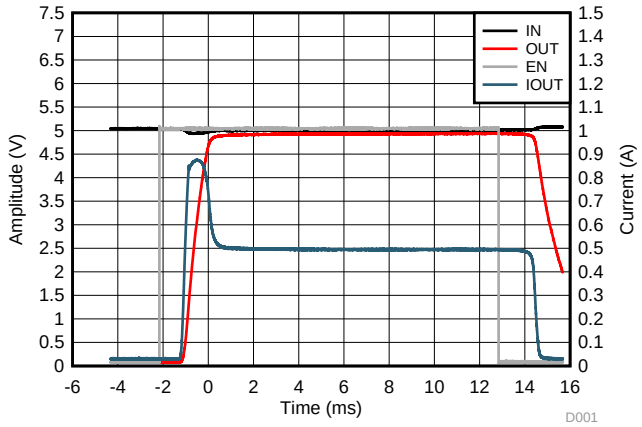

Figure 1. Turn ON into 10 Ω

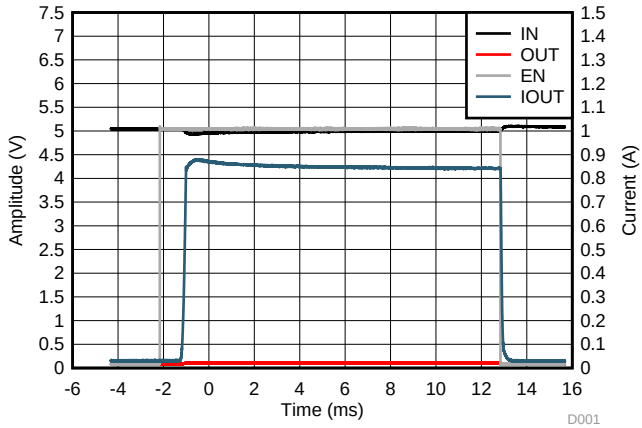

Figure 2. Enable into Short

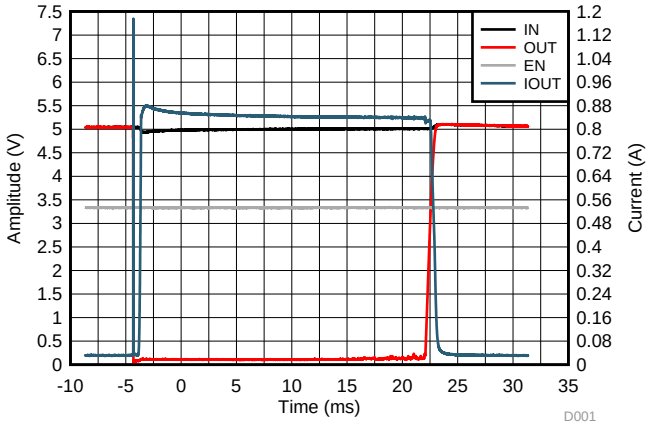

Figure 3. Pulsed Output Short

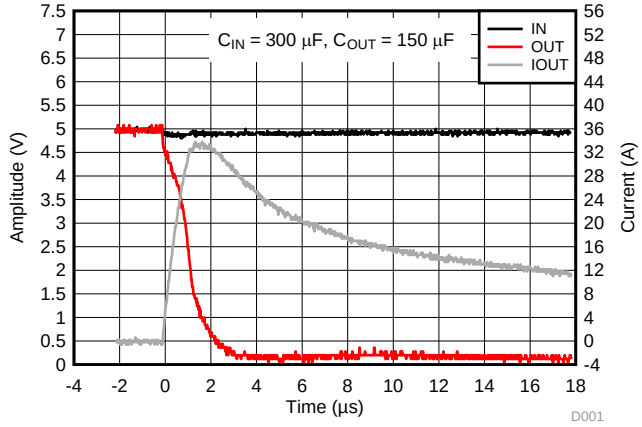

Figure 4. Short Applied

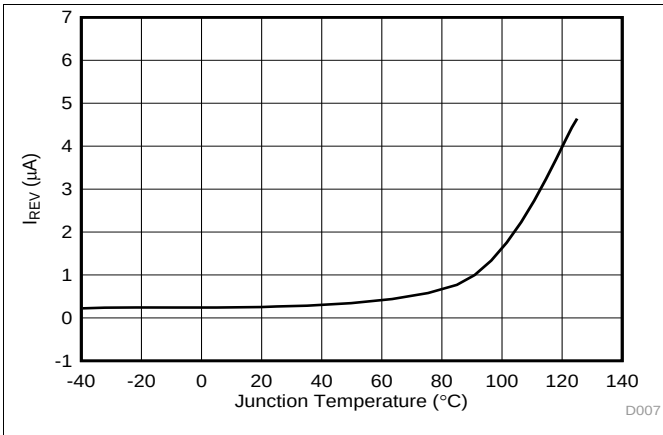

Figure 5. Reverse Leakage Current (I_{REV}) vs Temperature

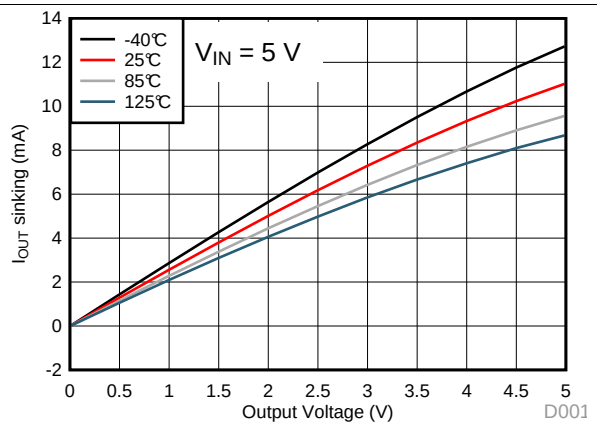

Figure 6. Output Discharge Current vs Output Voltage

Typical Characteristics (continued)

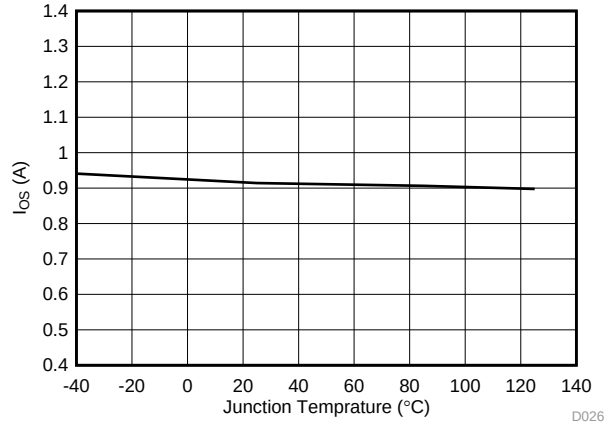

Figure 7. Short Circuit Current (I_{OS}) vs Temperature

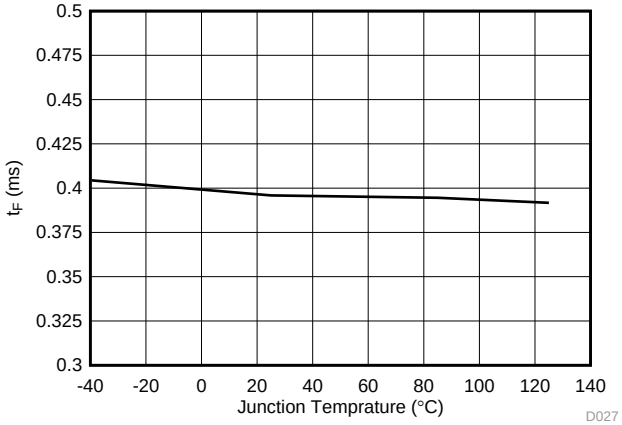

Figure 8. Output Fall Time (t_F) vs Temperature

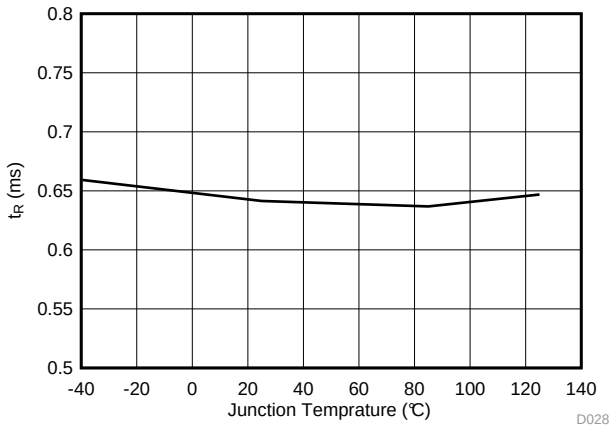

Figure 9. Output Rise Time (t_R) vs Temperature

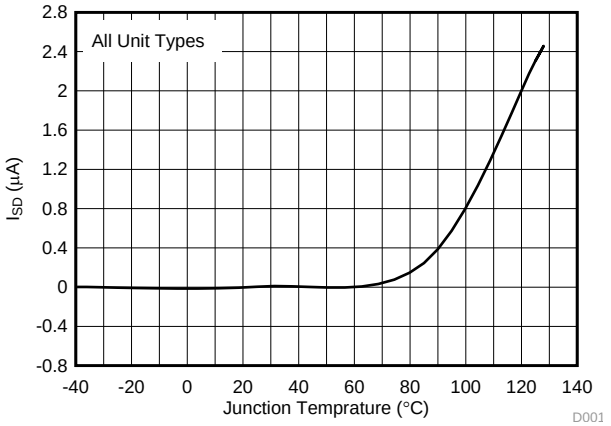

Figure 10. Disabled Supply Current (I_{SD}) vs Temperature

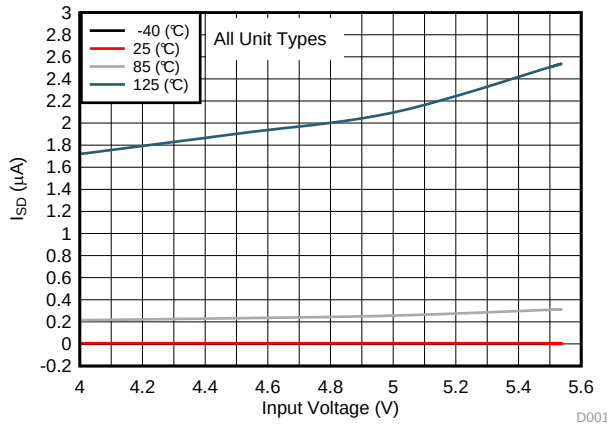

Figure 11. Disabled Supply Current (I_{SD}) vs Input Voltage

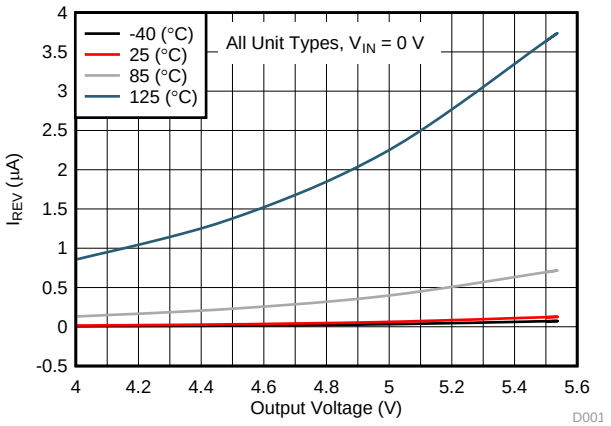

Figure 12. Reverse Leakage Current (I_{REV}) vs Output Voltage

Copyright © 2016, Texas Instruments Incorporated

Typical Characteristics (continued)

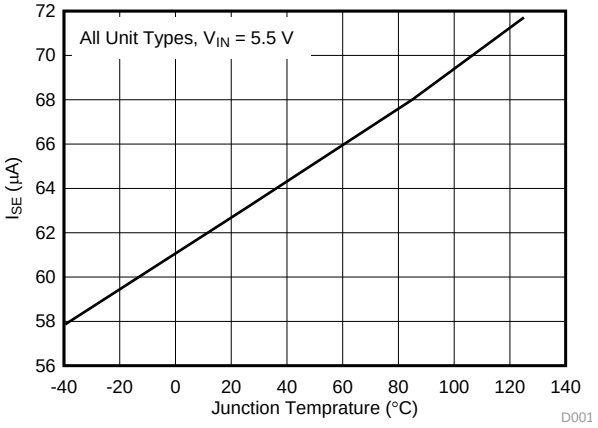

Figure 13. Enabled Supply Current (I_{SE}) vs Temperature

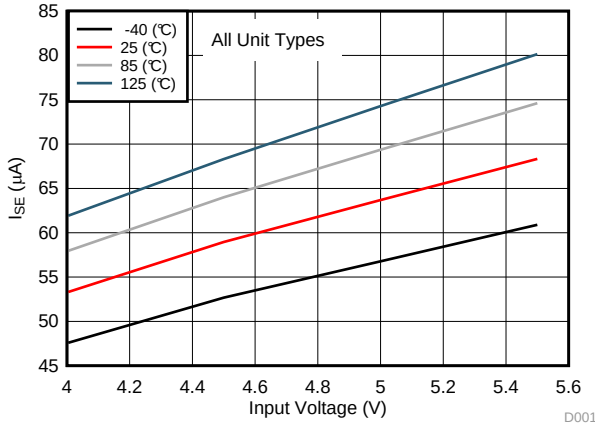

Figure 14. Enabled Supply Current (I_{SE}) vs Input Voltage

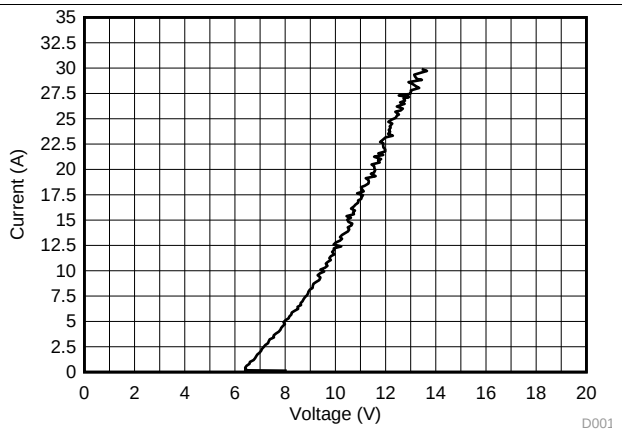

Figure 15. D1/D2 Positive TLP Curve

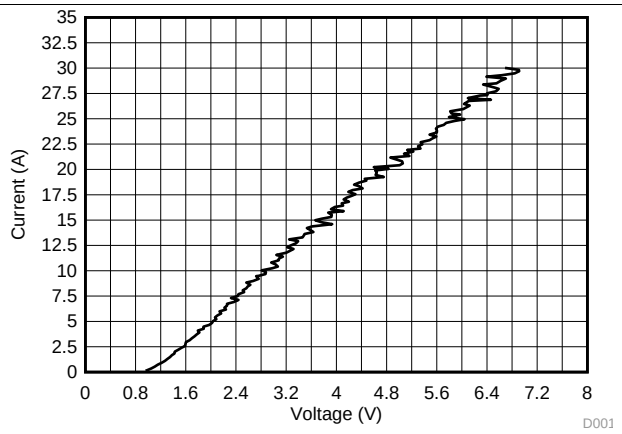

Figure 16. D1/D2 Negative TLP Curve

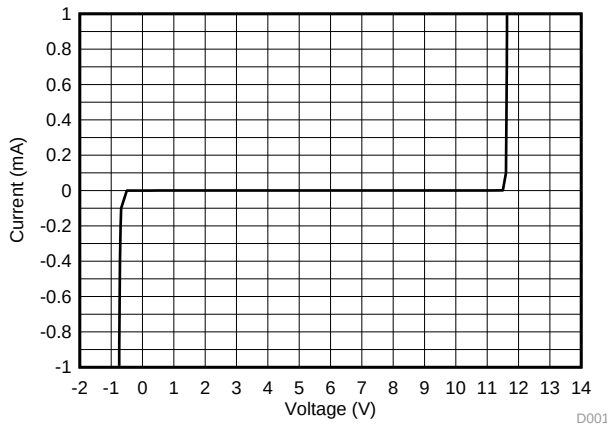

Figure 17. D1/D2 I-V Curve

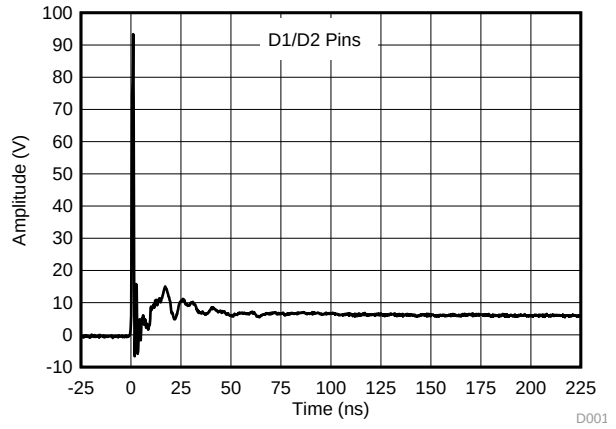

Figure 18. D1/D2 IEC 61000-4-2 8-kV Contact

Copyright © 2016, Texas Instruments Incorporated

Typical Characteristics (continued)

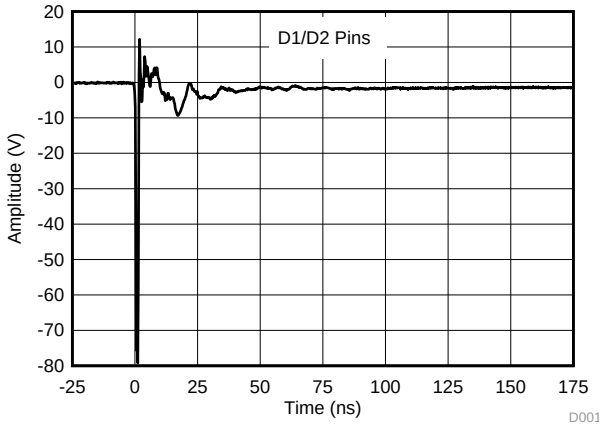

Figure 19. D1/D2 IEC 61000-4-2 –8-kV Contact

7 Parameter Measurement Information

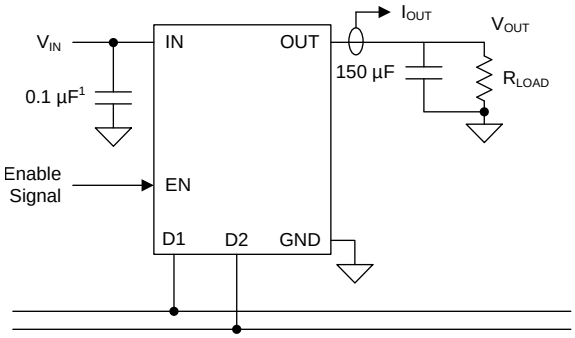

Copyright © 2016, Texas Instruments Incorporated

(1) During the short applied tests, 300 µF is used because of the use of an external supply.

Figure 20. Test Circuit for System Operation

Copyright © 2016, Texas Instruments Incorporated

8 Detailed Description

8.1 Overview

The TPD3S014-Q1 is a highly integrated device that features a current limited load switch and a two-channel TVS based ESD protection diode array for USB interfaces. The TPD3S014-Q1 provides 0.5 A of continuous load current in 5 V circuits. This part uses N-channel MOSFETs for low resistance, maintaining voltage regulation to the load. It is designed for applications where short circuits or heavy capacitive loads will be encountered. Device features include enable, reverse blocking when disabled, output discharge pull-down, over-current protection, and over-temperature protection. Finally, with two channels of TVS ESD protection diodes integrated, the TPD3S014-Q1 provides system level ESD protection to all the pins of the USB port.

8.2 Functional Block Diagram

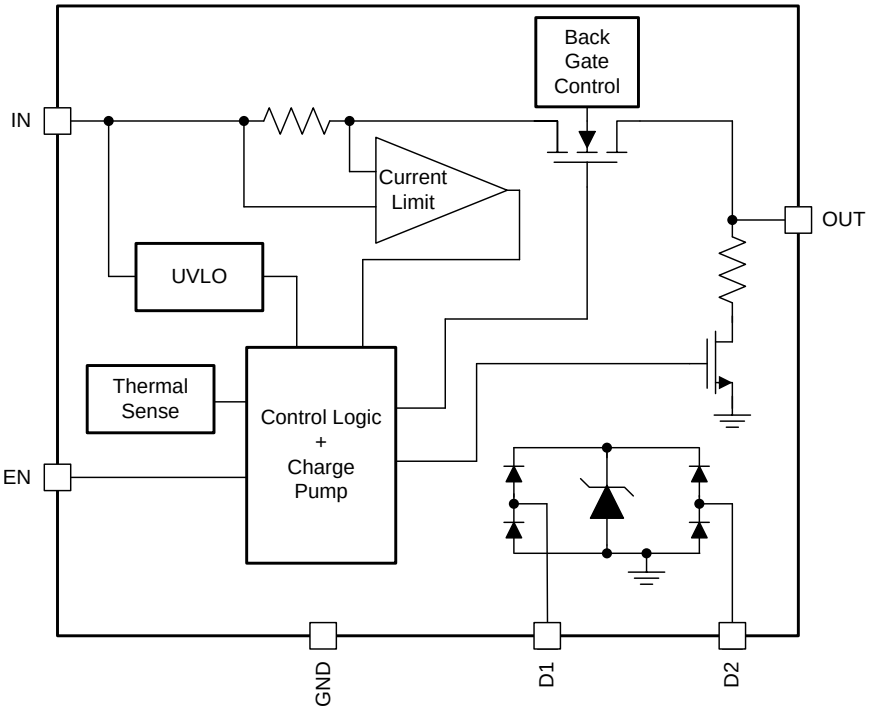

Copyright © 2016, Texas Instruments Incorporated

8.3 Feature Description

8.3.1 Undervoltage Lockout (UVLO)

The UVLO circuit disables the power switch until the input voltage reaches the UVLO turnon threshold. Built-in hysteresis prevents unwanted on and off cycling becuase of input voltage drop from large current surges.

8.3.2 Enable

The logic enable input (EN) controls the power switch, bias for the charge pump, driver, and other circuits. The supply current is reduced to less than 1 µA when the TPD3S014-Q1 is disabled. The enable input is compatible with both TTL and CMOS logic levels.

The turnon and turnoff times (t_{ON}, t_{OFF}) are composed of a delay and a rise or fall time (t_R, t_F). The delay times are internally controlled. The rise time is controlled by both the TPD3S014-Q1 and the external loading (especially capacitance). The TPD3S014-Q1 fall time is controlled by the loading (R and C), and the output discharge (R_{PD}). An output load consisting of only a resistor experiences a fall time set by the TPD3S014-Q1. An output load with parallel R and C elements experiences a fall time determined by the (R × C) time constant if it is longer than the TPD3S014-Q1 t_F. See Figure 21 and Figure 22 showing t_R, t_F, t_{ON}, and t_{OFF}. The enable must not be left open; it may be tied to V_{IN}.

Feature Description (continued)

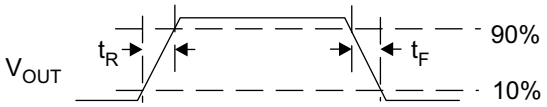

Figure 21. Power-On and Power-Off Timing

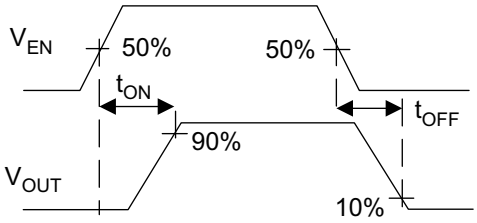

Figure 22. Enable Timing, Active-High Enable

8.3.3 Internal Charge Pump

The TPD3S014-Q1 incorporates an internal charge pump and gate drive circuitry necessary to drive the N-channel MOSFET. The charge pump supplies power to the gate driver circuit and provides the necessary voltage to pull the gate of the MOSFET above the source. The driver incorporates circuitry that controls the rise and fall times of the output voltage to limit large current and voltage surges on the input supply, and provides built-in soft-start functionality. The MOSFET power switch blocks current from OUT to IN when turned off by the UVLO or disabled.

8.3.4 Current Limit

The TPD3S014-Q1 responds to overloads by limiting output current to the static current-limit (IOS) levels shown in the *Electrical Characteristics: T_J = T_A = 25°C* table. When an overload condition is present, the device maintains a constant output current, with the output voltage determined by (I_{OS} × R_{LOAD}). Two possible overload conditions can occur.

The first overload condition occurs when either:

1. The input voltage is first applied, enable is true, and a short circuit is present (load which draws I_{OUT} > I_{OS}) or
2. The input voltage is present and the TPD3S014-Q1 is enabled into a short circuit.

The output voltage is held near zero potential with respect to ground and the TPD3S014-Q1 ramps the output current to IOS. The TPD3S014-Q1 limits the current to IOS until the overload condition is removed or the device begins to thermal cycle. The device subsequently cycles current off and on as the thermal protection engages.

The second condition is when an overload occurs while the device is enabled and fully turned on. The device responds to the overload condition within t_{IOS} when the specified overload (per *Electrical Characteristics: T_J = T_A = 25°C*, Electrical Characteristics: –40°C ≤ T_A ≤ 105°C tables) is applied (See Figure 23 and Figure 24). The response speed and shape varies with the overload level, input circuit, and rate of application. The current-limit response varies between simply settling to I_{OS}, or turnoff and controlled return to I_{OS}. Similar to the previous case, the TPD3S014-Q1 limits the current to I_{OS} until the overload condition is removed or the device begins to thermal cycle.

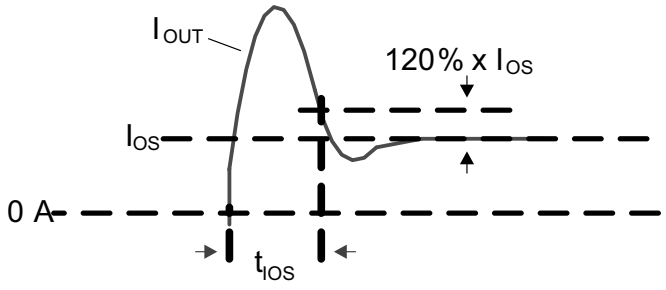

Figure 23. Output Short Circuit Parameters

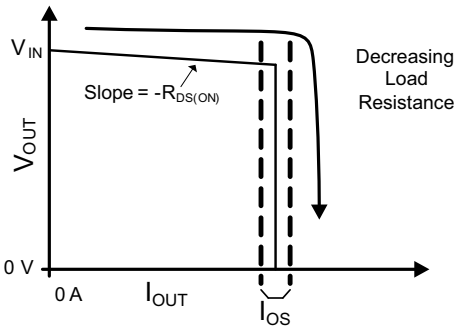

Figure 24. Output Characteristic Showing Current Limit

Copyright © 2016, Texas Instruments Incorporated

Feature Description (continued)

The TPD3S014-Q1 thermal cycles if an overload condition is present long enough to activate thermal limiting in any of the cases shown in Figure 23 and Figure 24. This is because of the relatively large power dissipation [(V_{IN} – V_{OUT}) × I_{OS}] driving the junction temperature up. The devices turn off when the junction temperature exceeds 135°C (minimum) while in current limit. The devices remains off until the junction temperature cools down to 20°C and then restarts.

There are two kinds of current limit profiles typically available in TI switch products similar to the TPD3S014-Q1. Many older designs have an output I vs V characteristic similar to the plot labeled "Current Limit with Peaking" in Figure 25. This type of limiting can be characterized by two parameters, the current limit corner (I_{OC}), and the short circuit current (I_{OS}). I_{OC} is often specified as a maximum value. The TPD3S014-Q1 part does not present noticeable peaking in the current limit, corresponding to the characteristic labeled "Flat Current Limit" in Figure 25. This is why the I_{OC} parameter is not present in the *Electrical Characteristics: T_J = T_A = 25°C*, Electrical Characteristics: –40°C ≤ T_A ≤ 105°C tables.

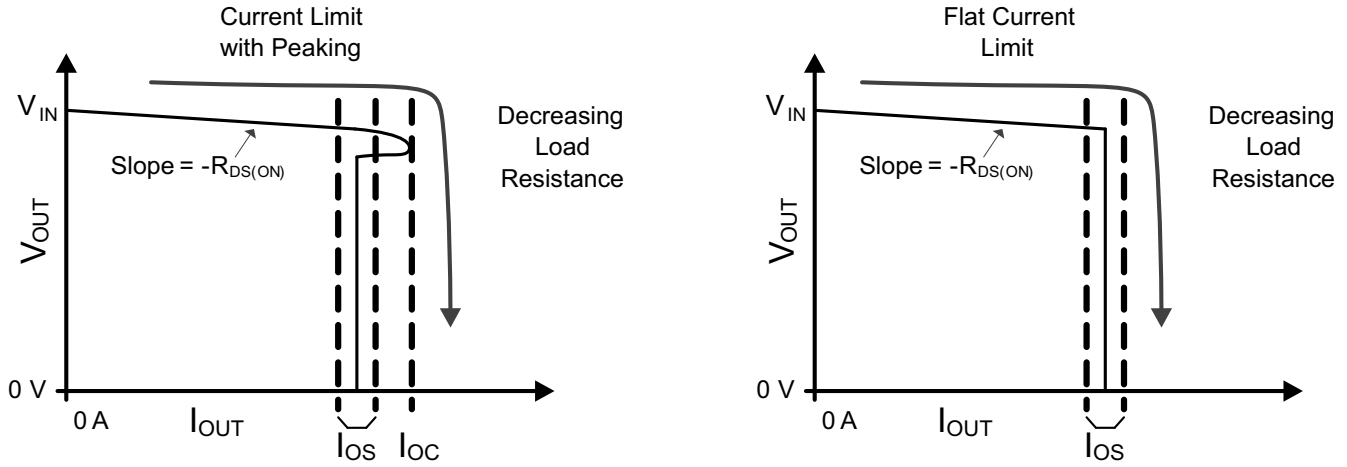

Figure 25. Current Limit Profiles

8.3.5 Output Discharge

A 470 Ω (typical) output discharge resistance dissipates stored charge and leakage current on OUT when the TPD3S014-Q1 is in UVLO or disabled. The pull-down circuit loses bias gradually as V_{IN} decreases, causing a rise in the discharge resistance as V_{IN} falls towards 0 V.

8.3.6 Input and Output Capacitance

Input and output capacitance improves the performance of the device; the actual capacitance must be optimized for the particular application. For all applications, a 0.1 µF or greater ceramic bypass capacitor between IN and GND is recommended as close to the device as possible for local noise decoupling.

All protection circuits such as the TPD3S014-Q1 has the potential for input voltage overshoots and output voltage undershoots.

Input voltage overshoots can be caused by either of two effects. The first cause is an abrupt application of input voltage in conjunction with input power bus inductance and input capacitance when the IN terminal is high impedance (before turnon). Theoretically, the peak voltage is 2 times the applied. The second cause is because of the abrupt reduction of output short circuit current when the TPD3S014-Q1 turns off and energy stored in the input inductance drives the input voltage high. Input voltage droops may also occur with large load steps and as the TPD3S014-Q1 output is shorted. Applications with large input inductance (for example, connecting the evaluation board to the bench power-supply through long cables) may require large input capacitance reduce the voltage overshoot from exceeding the absolute maximum voltage of the device. The fast current-limit speed of the TPD3S014-Q1 to hard output short circuits isolates the input bus from faults. However, ceramic input capacitance in the range of 1 µF to 22 µF adjacent to the TPD3S014-Q1 input aids in both speeding the response time and limiting the transient seen on the input power bus. Momentary input transients to 6.5 V are permitted.

Copyright © 2016, Texas Instruments Incorporated

Feature Description (continued)

Output voltage undershoot is caused by the inductance of the output power bus just after a short has occurred and the TPD3S014-Q1 has abruptly reduced OUT current. Energy stored in the inductance drives the OUT voltage down and potentially negative as it discharges. Applications with large output inductance (such as from a cable) benefit from use of a high-value output capacitor to control the voltage undershoot. When implementing USB standard applications, a 120-µF minimum output capacitance is required. Typically a 150- µF electrolytic capacitor is used, which is sufficient to control voltage undershoots. However, if the application does not require 120 µF of capacitance, and there is potential to drive the output negative, a minimum of 10-µF ceramic capacitance on the output is recommended. The voltage undershoot must be controlled to less than 1.5 V for 10 µs.

8.4 Device Functional Modes

8.4.1 Operation With V_{IN} < 4 V (Minimum V_{IN})

These devices operate with input voltages above 4 V. The maximum UVLO voltage on IN is 4 V and the devices will operate at input voltages above 4 V. Any voltage below 4 V may not work with these devices. The minimum UVLO is 3.5 V, so some devices may work between 3.5 V and 4 V. At input voltages below the actual UVLO voltage, these devices will not operate.

8.4.2 Operation With EN Control

The enable rising edge threshold voltage is 1.45 V typical and 2 V maximum. With EN held below that voltage the device is disabled and the load switch will be open. The IC quiescent current is reduced in this state. When the EN pin is above its rising edge threshold and the input voltage on the IN pin is above its UVLO threshold, the device becomes active. The load switch is closed, and the current limit feature is enabled. The output voltage on OUT ramps up with the soft start value T_{ON} in order to prevent large inrush current surges on V_{BUS} because of a heavy capacitive load. When EN voltage is lowered below is falling edge threshold, the device output voltage also ramps down with soft turnoff value T_{OFF} to prevent large inductive voltages being presented to the system in the case a large load current is following through the device.

8.4.3 Operation of Level 4 IEC 61000-4-2 ESD Protection

Regardless of which functional mode the devices are in, the TPD3S014-Q1 provides Level 4 IEC 61000-4-2 ESD Protection on the pins of the USB connector.

Copyright © 2016, Texas Instruments Incorporated

9 Application and Implementation

NOTE

Information in the following applications sections is not part of the TI component specification, and TI does not warrant its accuracy or completeness. TI's customers are responsible for determining suitability of components for their purposes. Customers should validate and test their design implementation to confirm system functionality.

9.1 Application Information

The TPD3S014-Q1 is a device that features a current limited load switch and a two-channel TVS based ESD protection diode array. It is typically used to provide a complete protection solution for USB host ports. USB host ports are required by the USB specification to provide a current limit on the VBUS path in order to protect the system from overcurrent conditions on the port that could lead to system damage and user injury. Additionally, USB ports typically require system level IEC ESD protection because of direct end-user interaction. The following design procedure can be used to determine how to properly implement the TPD3S014-Q1 in your systems to provide a complete, one-chip solution for your USB ports.

9.2 Typical Application

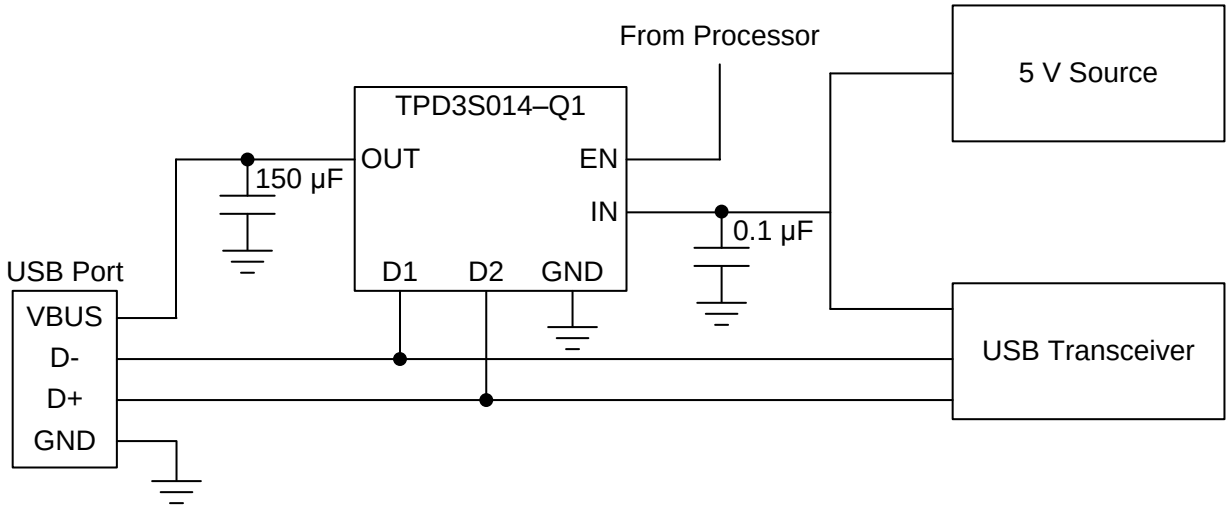

Copyright © 2016, Texas Instruments Incorporated

Figure 26. USB2.0 Application Schematic

9.2.1 Design Requirements

For this design example, design parameters shown in Table 1 are used.

Table 1. Design Parameters

DESIGN PARAMETER	VALUE
USB port type	Standard downstream port
Signal voltage range on V_{BUS}	0 V to 5.25 V
Current range on V_{BUS}	0 mA to 500 mA
Drive EN low (disabled)	0 V to 0.7 V(1)
Drive EN high (enabled)	2 V to 5.5 V(1)
Maximum voltage droop allowed on adjacent USB port	330 mV
Maximum data rate	480 Mbps

(1) If active low logic is desired, see the *Implementing Active Low Logic* section.

9.2.2 Detailed Design Procedure

To properly implement your USB port with the TPD3S014-Q1, the first step is to determine what type of USB port is implemented in the system, whether it be a Standard Downstream Port (SDP), Charging Downstream Port (CDP), or Dedicated Charging Port (DCP); this informs us what maximum continuous operating current will be on VBUS. In our example, we are implementing an SDP port, so the maximum continuous current allowed to be pulled by a device is 500 mA. Therefore, we must choose a current limit switch that is 5.25 V tolerant, can handle 500 mA continuous DC current, and has a current limit point is above 500 mA so it will not current limit during normal operation. The TPD3S014-Q1 is therefore the best choice for this application, as it has these features, and in fact was specifically designed for this application.

The next decision point is choosing the input and output capacitors for the current limit switch. A minimum of 0.1 µF is always recommended on the IN pin. For the OUT pin on VBUS, USB standard requires a minimum of 120 µF; typically a 150 µF capacitor is used. The purpose of the capacitance requirement on the VBUS line in the USB specification is to prevent the adjacent USB port's VBUS voltage from dropping more than 330 mV during a hot-plug or fault occurrence on the VBUS pin of one USB port. Hot-plugs and fault conditions on one USB port must not disturb the normal operation of an adjacent USB port; therefore, it is possible to use an output capacitance lower than 120 µF if the system is able to keep voltage droops on adjacent USB ports less than or equal to 330 mV. For example, if the DC/DC powering VBUS has a fast transient response, 120 µF may not be required.

If the USB port is powered from a shared system 5 V rail, a system designer may desire to use an input capacitor larger than 0.1 µF on the IN pin. This is largely dependent on the PCB layout and parasitics, as well as your maximum tolerated voltage droop on the shared rail during transients. For more information on choosing input and output capacitors, see the *Input and Output Capacitance* section.

The EN pin controls the on and off state of the device, and typically is connected to the system processor for power sequencing. However, the EN pin can also be shorted to the IN pin to always have the TPD3S014-Q1 on when 5 V power supply on; this also saves a GPIO pin on your processor.

For a USB port with High-Speed 480 Mbps operation, low capacitance TVS ESD protection diodes are required to protect the D+ and D– lines in the event of system level ESD event. The TPD3S014-Q1 has 2-channels of low capacitance TVS ESD protection diodes integrated. When placed near the USB connector, the TPD3S014-Q1 offers little or no signal distortion during normal operation. The TPD3S014-Q1 also ensures that the core system circuitry is protected in the event of an ESD strike. PCB layout is critical when implementing TVS ESD protection diodes in your system. See the *Layout* section for proper guidelines on routing your USB lines with the TPD3S014-Q1.

9.2.3 Implementing Active Low Logic

For active low logic, a transistor can be used with the TPD3S014-Q1 EN Pin. Figure 27 shows how to implement Active low logic for EN pin.

Using an nFET transistor, when the Processor sends a low signal, the transistor is switched off, and V_{LOGIC} pulls up EN through R_1. When the Processor sends a “high” signal, the nFET is switched on and sinks current from the EN Pin and R_1. For 5 V V_{LOGIC}, with the appropriate on-resistance (R_{ON}) value in the nFET and resistance for R_1, the V_{IL} for EN can be met. For example, with a transistor with R_{ON} of 3 Ω, a pull-up resistor as low as 11 Ω provides a logic level of 0.7 V. For power-budgeting concerns, a better choice is R_1 of 40 kΩ which provides 0.25 V for EN when the Processor asserts high, and 4.96 V when the Processor asserts low.

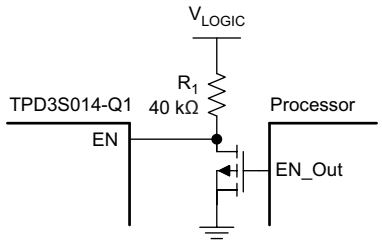

Copyright © 2016, Texas Instruments Incorporated

Figure 27. Implementing Active Low Logic for EN Pin

9.2.4 Application Curves

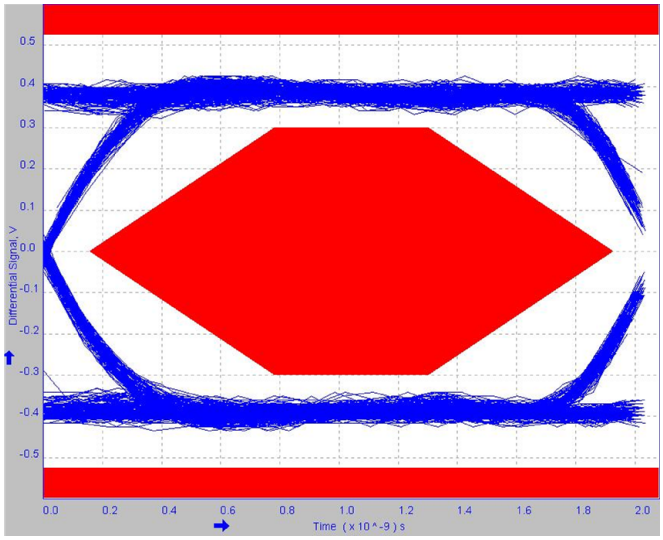

Figure 28. Eye-Diagram Without EVM

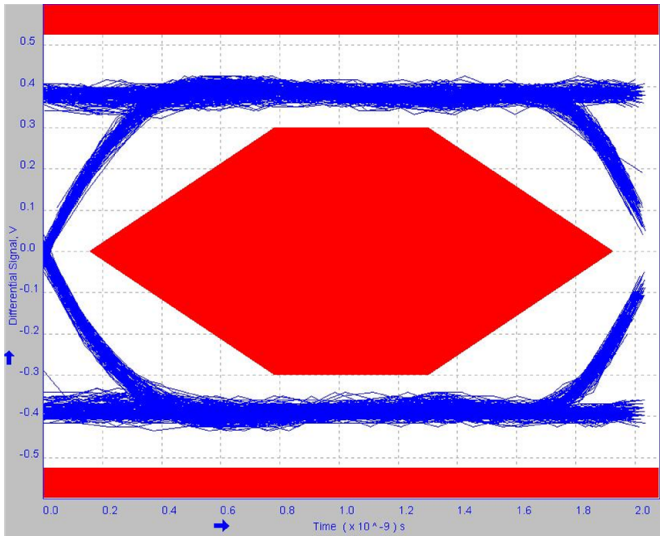

Figure 29. Eye-Diagram With EVM, Without TPD3S014-Q1

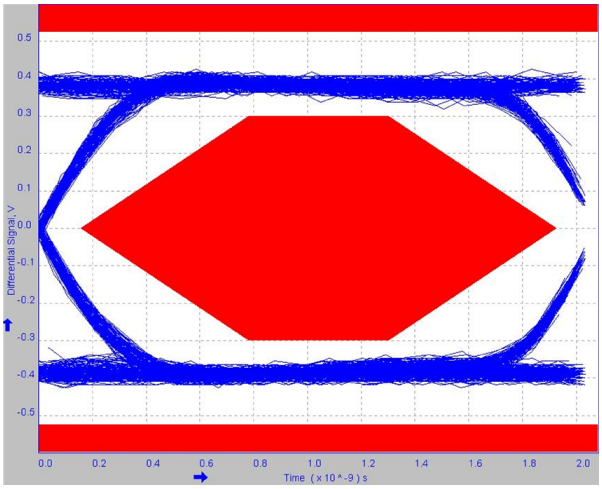

Figure 30. Eye-Diagram of TPD3S014-Q1 on EVM

10 Power Supply Recommendations

The TPD3S014-Q1 is designed to operate from a 5-V input voltage supply. This input must be well regulated. If the input supply is located more than a few inches away from the TPD3S014-Q1, additional bulk capacitance may be required in addition to the recommended minimum 0.1-µF bypass capacitor on the IN pin to keep the input rail stable during fault events.

11 Layout

11.1 Layout Guidelines

- The optimum placement is as close to the connector as possible.
  - EMI during an ESD event can couple from the trace being struck to other nearby unprotected traces, resulting in early system failures.
  - The PCB designer must minimize the possibility of EMI coupling by keeping any unprotected traces away from the protected traces which are between the TVS and the connector.
- Route the protected traces as straight as possible.
- Eliminate any sharp corners on the protected traces between the TVS and the connector by using rounded corners with the largest radii possible.
  - Electric fields tend to build up on corners, increasing EMI coupling.

11.2 Layout Example

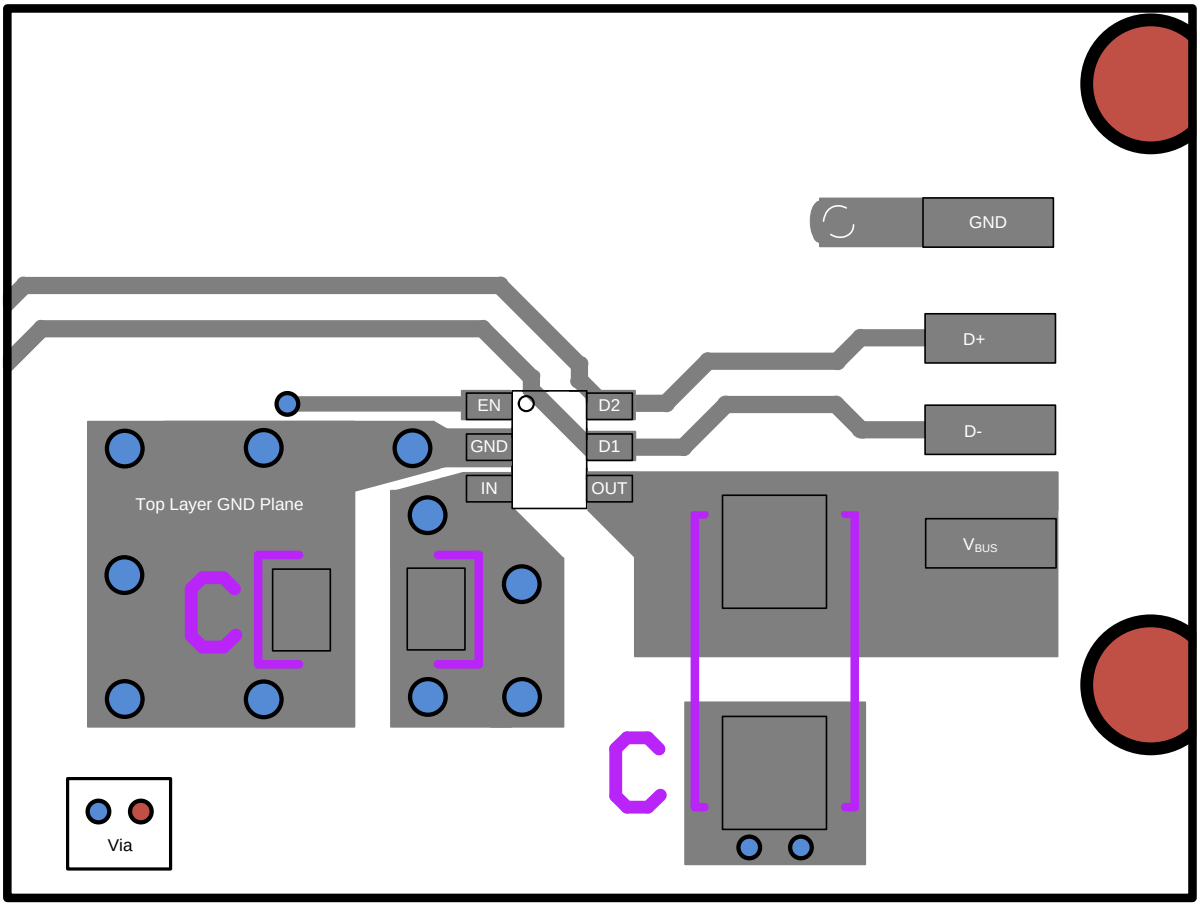

Figure 31. USB2.0 Type A TPD3S014-Q1 Board Layout

Copyright © 2016, Texas Instruments Incorporated

11.3 Power Dissipation and Junction Temperature

It is good design practice to estimate power dissipation and maximum expected junction temperature of the TPD3S014-Q1. The system designer can control choices of the devices proximity to other power dissipating devices and printed circuit board (PCB) design based on these calculations. These have a direct influence on maximum junction temperature. Other factors, such as airflow and maximum ambient temperature, are often determined by system considerations. It is important to remember that these calculations do not include the effects of adjacent heat sources, and enhanced or restricted air flow. Addition of extra PCB copper area around these devices is recommended to reduce the thermal impedance and maintain the junction temperature as low as practical. In particular, connect the GND pin to a large ground plane for the best thermal dissipation. The following PCB layout example in Figure 32 was used to determine the $R_{\theta JA}$ Custom thermal impedances noted in the *Thermal Information* table. It is based on the use of the JEDEC high-k circuit board construction with 4, 1 oz. copper weight layers (2 signal and 2 plane).

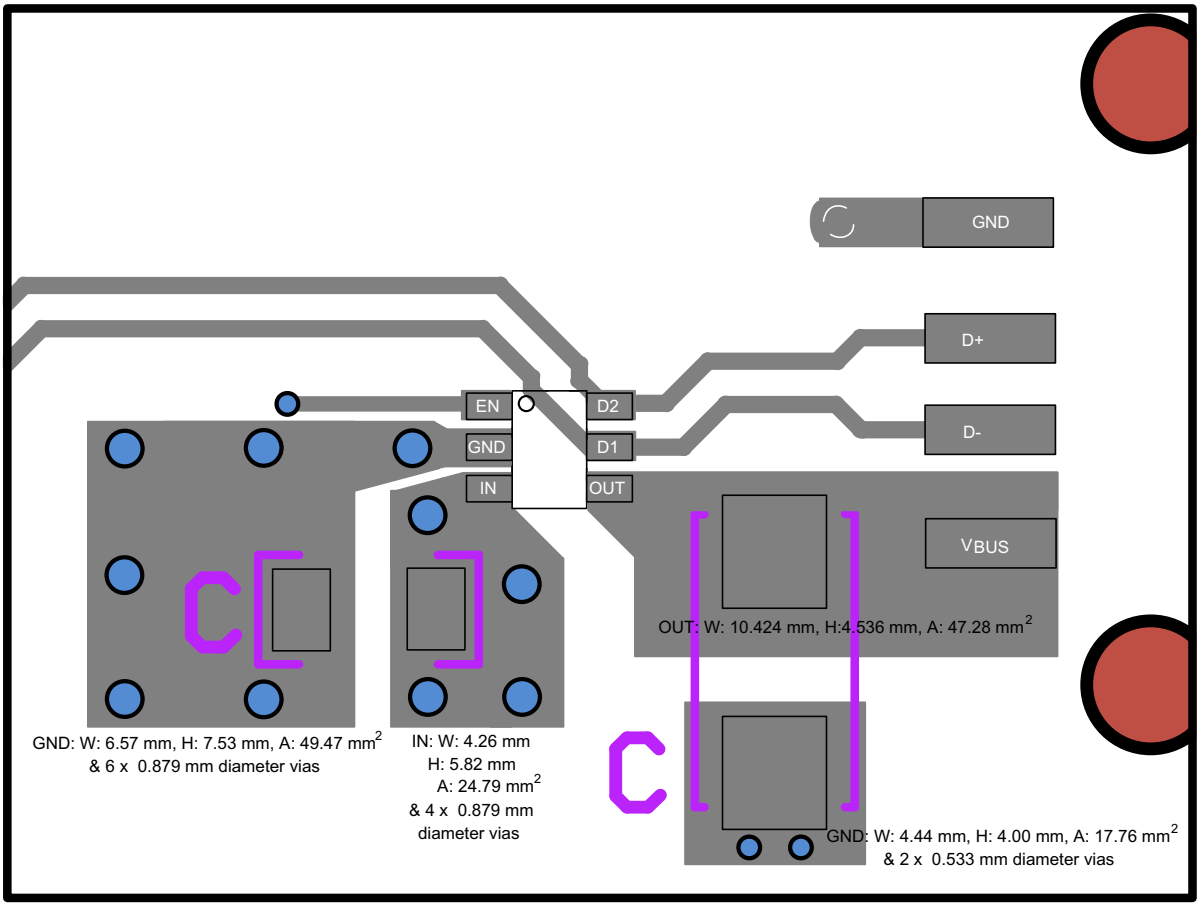

Figure 32. PCB Layout Example

The following procedure requires iteration a power loss is because of the internal MOSFET $I^2 \times R_{DS(ON)}$, and $R_{DS(ON)}$ is a function of the junction temperature. See Equation 1. As an initial estimate, use the $R_{DS(ON)}$ at 105°C from the *Typical Characteristics*, and the preferred package thermal resistance for the preferred board construction from the *Thermal Information* table.

$$T_J = T_A + [(I_{OUT}^2 \times R_{DS(ON)}) \times R_{\theta JA}] \quad (1)$$

where

- I_{OUT} = Rated OUT pin current (A)
- $R_{DS(ON)}$ = Power switch on-resistance at an assumed T_J (Ω)
- T_A = Maximum ambient temperature (°C)
- T_J = Maximum junction temperature (°C)
- $R_{\theta JA}$ = Thermal resistance (°C/W)

Copyright © 2016, Texas Instruments Incorporated

Power Dissipation and Junction Temperature (continued)

If the calculated T_J is substantially different from the original assumption, estimate a new value of $R_{DS(ON)}$ using the typical characteristic plot and recalculate.

If the resulting T_J is not less than 125°C, try a PCB construction with a lower $R_{\theta JA}$. The junction temperature derating curve based on the TI standard reliability duration is shown in Figure 33.

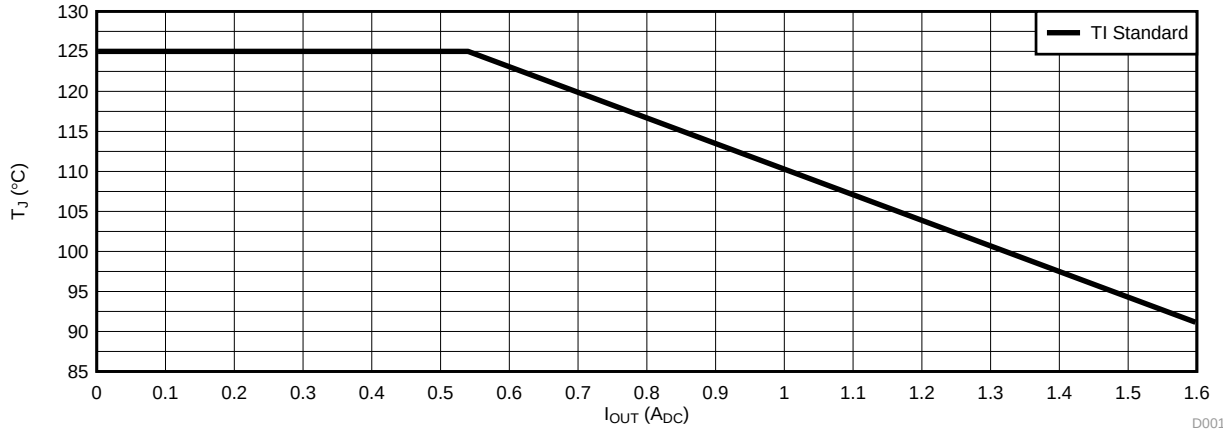

Figure 33. Junction Temperature Derating Curve

Copyright © 2016, Texas Instruments Incorporated

12 Device and Documentation Support

12.1 Documentation Support

12.1.1 Related Documentation

For related documentation see the following:

TPD3S014-Q1EVM User's Guide, SLVUAQ0.

12.2 Community Resources

The following links connect to TI community resources. Linked contents are provided "AS IS" by the respective contributors. They do not constitute TI specifications and do not necessarily reflect TI's views; see TI's Terms of Use.

TI E2E™ Online Community ***TI's Engineer-to-Engineer (E2E) Community.*** Created to foster collaboration among engineers. At e2e.ti.com, you can ask questions, share knowledge, explore ideas and help solve problems with fellow engineers.

Design Support ***TI's Design Support*** Quickly find helpful E2E forums along with design support tools and contact information for technical support.

12.3 Trademarks

E2E is a trademark of Texas Instruments.
All other trademarks are the property of their respective owners.

12.4 Electrostatic Discharge Caution



These devices have limited built-in ESD protection. The leads should be shorted together or the device placed in conductive foam during storage or handling to prevent electrostatic damage to the MOS gates.

12.5 Glossary

SLYZ022 — *TI Glossary*.

This glossary lists and explains terms, acronyms, and definitions.

13 Mechanical, Packaging, and Orderable Information

The following pages include mechanical, packaging, and orderable information. This information is the most current data available for the designated devices. This data is subject to change without notice and revision of this document. For browser-based versions of this data sheet, refer to the left-hand navigation.

Copyright © 2016, Texas Instruments Incorporated

PACKAGING INFORMATION

Orderable Device	Status (1)	Package Type	Package Drawing	Pins	Package Qty	Eco Plan (2)	Lead/Ball Finish (6)	MSL Peak Temp (3)	Op Temp (°C)	Device Marking (4/5)	Samples
TPD3S014TDBVRQ1	ACTIVE	SOT-23	DBV	6	3000	Green (RoHS & no Sb/Br)	CU SN	Level-2-260C-1 YEAR	-40 to 105	13WW	Samples

(1) The marketing status values are defined as follows:
ACTIVE: Product device recommended for new designs.
LIFEBUY: TI has announced that the device will be discontinued, and a lifetime-buy period is in effect.
NRND: Not recommended for new designs. Device is in production to support existing customers, but TI does not recommend using this part in a new design.
PREVIEW: Device has been announced but is not in production. Samples may or may not be available.
OBSOLETE: TI has discontinued the production of the device.

(2) Eco Plan - The planned eco-friendly classification: Pb-Free (RoHS), Pb-Free (RoHS Exempt), or Green (RoHS & no Sb/Br) - please check http://www.ti.com/productcontent for the latest availability information and additional product content details.
TBD: The Pb-Free/Green conversion plan has not been defined.
Pb-Free (RoHS): TI's terms "Lead-Free" or "Pb-Free" mean semiconductor products that are compatible with the current RoHS requirements for all 6 substances, including the requirement that lead not exceed 0.1% by weight in homogeneous materials. Where designed to be soldered at high temperatures, TI Pb-Free products are suitable for use in specified lead-free processes.
Pb-Free (RoHS Exempt): This component has a RoHS exemption for either 1) lead-based flip-chip solder bumps used between the die and package, or 2) lead-based die adhesive used between the die and leadframe. The component is otherwise considered Pb-Free (RoHS compatible) as defined above.
Green (RoHS & no Sb/Br): TI defines "Green" to mean Pb-Free (RoHS compatible), and free of Bromine (Br) and Antimony (Sb) based flame retardants (Br or Sb do not exceed 0.1% by weight in homogeneous material)

(3) MSL, Peak Temp. - The Moisture Sensitivity Level rating according to the JEDEC industry standard classifications, and peak solder temperature.

(4) There may be additional marking, which relates to the logo, the lot trace code information, or the environmental category on the device.

(5) Multiple Device Markings will be inside parentheses. Only one Device Marking contained in parentheses and separated by a "~" will appear on a device. If a line is indented then it is a continuation of the previous line and the two combined represent the entire Device Marking for that device.

(6) Lead/Ball Finish - Orderable Devices may have multiple material finish options. Finish options are separated by a vertical ruled line. Lead/Ball Finish values may wrap to two lines if the finish value exceeds the maximum column width.

Important Information and Disclaimer: The information provided on this page represents TI's knowledge and belief as of the date that it is provided. TI bases its knowledge and belief on information provided by third parties, and makes no representation or warranty as to the accuracy of such information. Efforts are underway to better integrate information from third parties. TI has taken and continues to take reasonable steps to provide representative and accurate information but may not have conducted destructive testing or chemical analysis on incoming materials and chemicals. TI and TI suppliers consider certain information to be proprietary, and thus CAS numbers and other limited information may not be available for release.

In no event shall TI's liability arising out of such information exceed the total purchase price of the TI part(s) at issue in this document sold by TI to Customer on an annual basis.

OTHER QUALIFIED VERSIONS OF TPD3S014-Q1 :

- Catalog: TPD3S014

NOTE: Qualified Version Definitions:

- Catalog - TI's standard catalog product

TAPE AND REEL INFORMATION

REEL DIMENSIONS

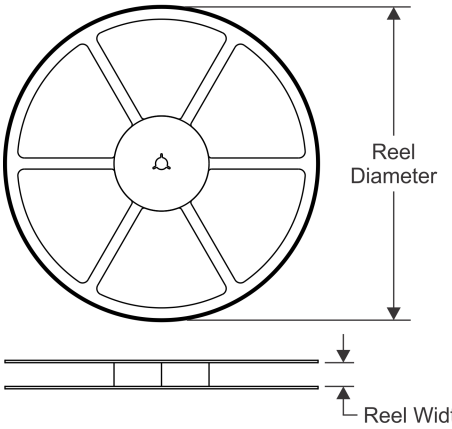

TAPE DIMENSIONS

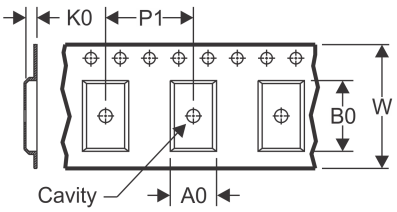

A0	Dimension designed to accommodate the component width
B0	Dimension designed to accommodate the component length
K0	Dimension designed to accommodate the component thickness
W	Overall width of the carrier tape
P1	Pitch between successive cavity centers

QUADRANT ASSIGNMENTS FOR PIN 1 ORIENTATION IN TAPE

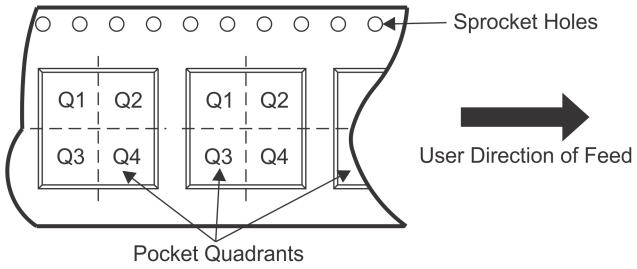

*All dimensions are nominal

Device	Package Type	Package Drawing	Pins	SPQ	Reel Diameter (mm)	Reel Width W1 (mm)	A0 (mm)	B0 (mm)	K0 (mm)	P1 (mm)	W (mm)	Pin1 Quadrant
TPD3S014TDBVRQ1	SOT-23	DBV	6	3000	178.0	9.0	3.23	3.17	1.37	4.0	8.0	Q3

TAPE AND REEL BOX DIMENSIONS

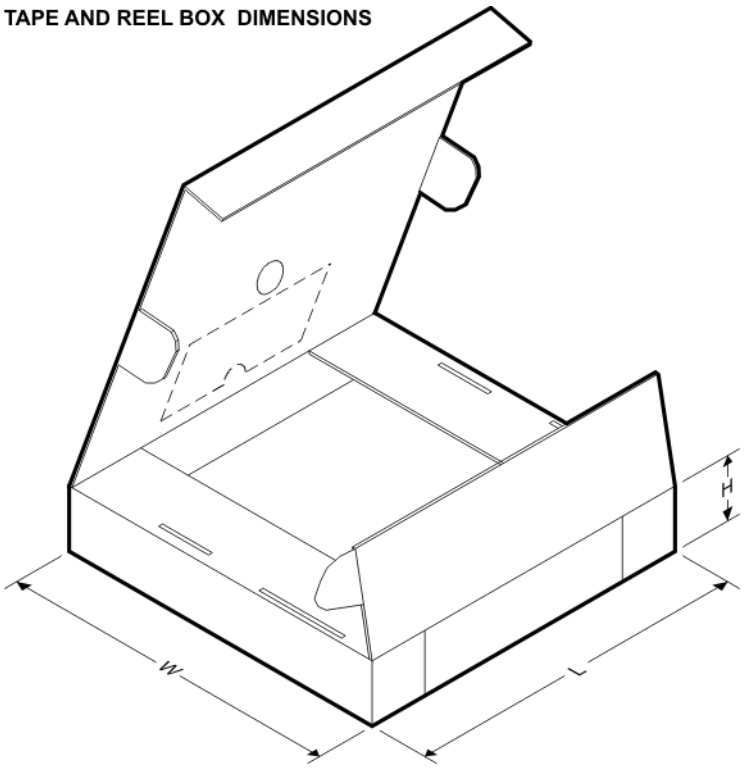

*All dimensions are nominal

Device	Package Type	Package Drawing	Pins	SPQ	Length (mm)	Width (mm)	Height (mm)
TPD3S014TDBVRQ1	SOT-23	DBV	6	3000	180.0	180.0	18.0

DBV (R–PDSO–G6) PLASTIC SMALL–OUTLINE PACKAGE

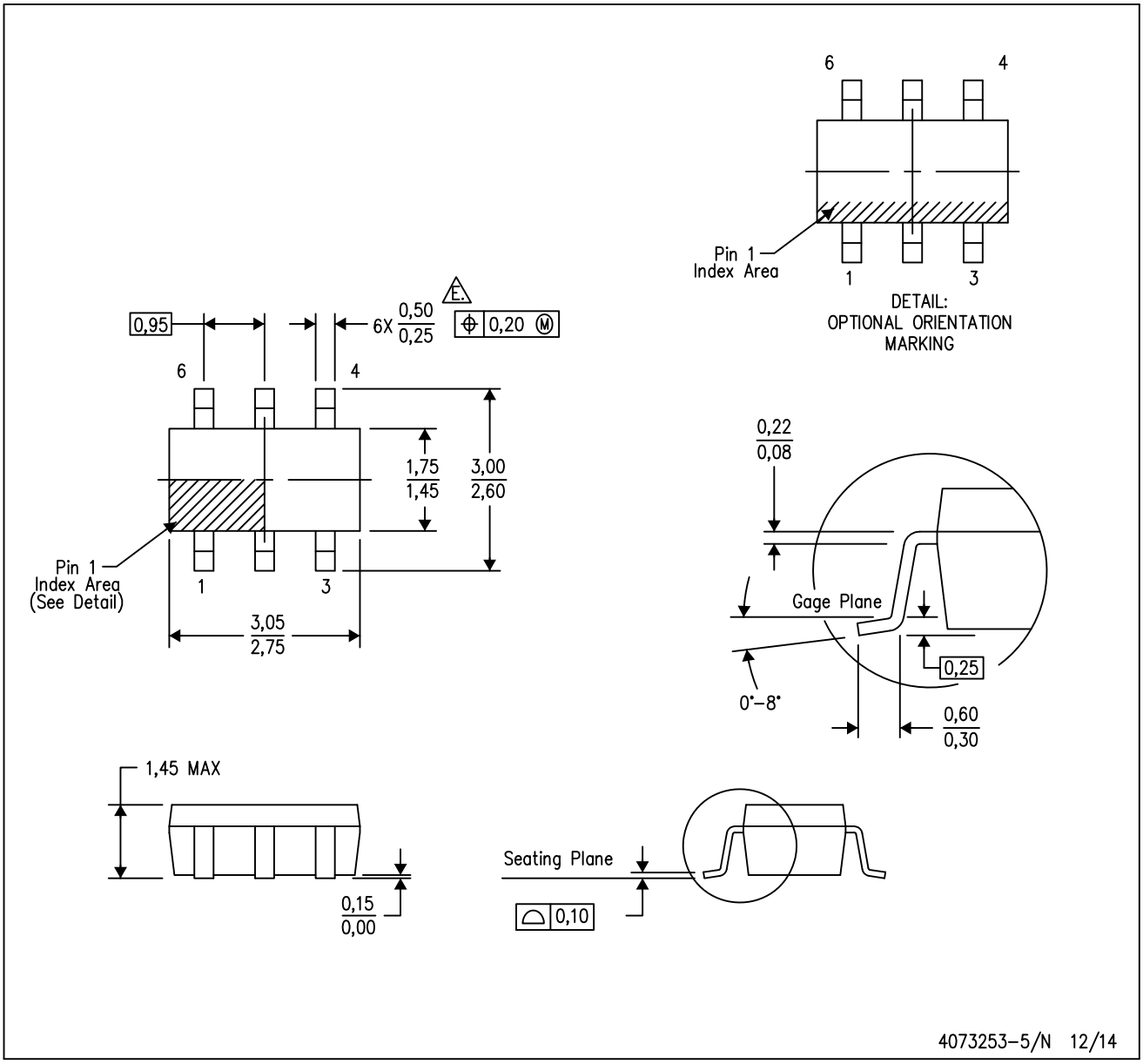

NOTES:
A. All linear dimensions are in millimeters.
B. This drawing is subject to change without notice.
C. Body dimensions do not include mold flash or protrusion. Mold flash and protrusion shall not exceed 0.15 per side.
D. Leads 1,2,3 may be wider than leads 4,5,6 for package orientation.
E. Falls within JEDEC MO–178 Variation AB, except minimum lead width.

DBV (R–PDSO–G6) PLASTIC SMALL OUTLINE

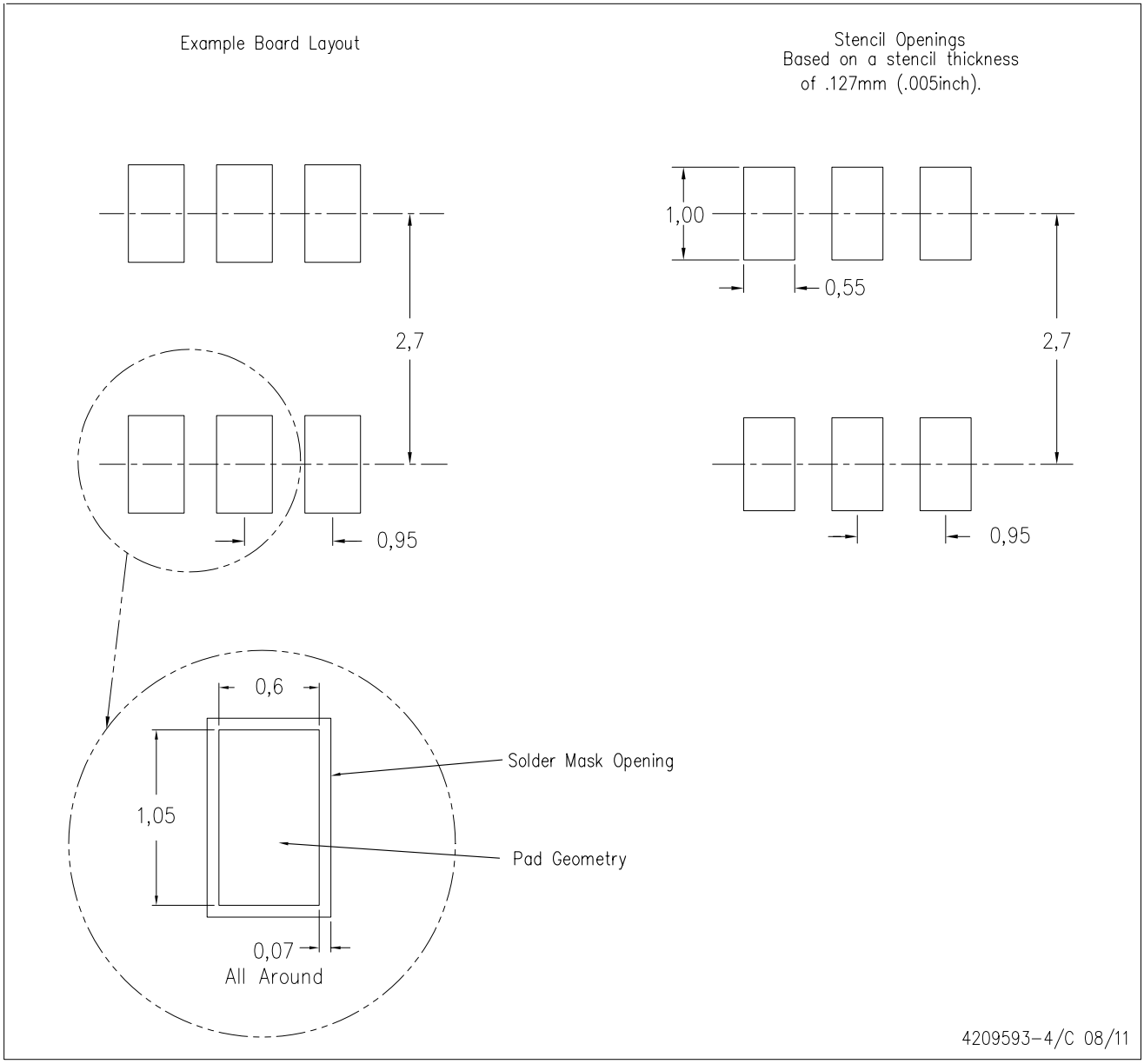

NOTES:
A. All linear dimensions are in millimeters.
B. This drawing is subject to change without notice.
C. Customers should place a note on the circuit board fabrication drawing not to alter the center solder mask defined pad.
D. Publication IPC–7351 is recommended for alternate designs.
E. Laser cutting apertures with trapezoidal walls and also rounding corners will offer better paste release. Customers should contact their board assembly site for stencil design recommendations. Example stencil design based on a 50% volumetric metal load solder paste. Refer to IPC–7525 for other stencil recommendations.

IMPORTANT NOTICE

Texas Instruments Incorporated and its subsidiaries (TI) reserve the right to make corrections, enhancements, improvements and other changes to its semiconductor products and services per JESD46, latest issue, and to discontinue any product or service per JESD48, latest issue. Buyers should obtain the latest relevant information before placing orders and should verify that such information is current and complete. All semiconductor products (also referred to herein as “components”) are sold subject to TI’s terms and conditions of sale supplied at the time of order acknowledgment.

TI warrants performance of its components to the specifications applicable at the time of sale, in accordance with the warranty in TI’s terms and conditions of sale of semiconductor products. Testing and other quality control techniques are used to the extent TI deems necessary to support this warranty. Except where mandated by applicable law, testing of all parameters of each component is not necessarily performed.

TI assumes no liability for applications assistance or the design of Buyers’ products. Buyers are responsible for their products and applications using TI components. To minimize the risks associated with Buyers’ products and applications, Buyers should provide adequate design and operating safeguards.

TI does not warrant or represent that any license, either express or implied, is granted under any patent right, copyright, mask work right, or other intellectual property right relating to any combination, machine, or process in which TI components or services are used. Information published by TI regarding third-party products or services does not constitute a license to use such products or services or a warranty or endorsement thereof. Use of such information may require a license from a third party under the patents or other intellectual property of the third party, or a license from TI under the patents or other intellectual property of TI.

Reproduction of significant portions of TI information in TI data books or data sheets is permissible only if reproduction is without alteration and is accompanied by all associated warranties, conditions, limitations, and notices. TI is not responsible or liable for such altered documentation. Information of third parties may be subject to additional restrictions.

Resale of TI components or services with statements different from or beyond the parameters stated by TI for that component or service voids all express and any implied warranties for the associated TI component or service and is an unfair and deceptive business practice. TI is not responsible or liable for any such statements.

Buyer acknowledges and agrees that it is solely responsible for compliance with all legal, regulatory and safety-related requirements concerning its products, and any use of TI components in its applications, notwithstanding any applications-related information or support that may be provided by TI. Buyer represents and agrees that it has all the necessary expertise to create and implement safeguards which anticipate dangerous consequences of failures, monitor failures and their consequences, lessen the likelihood of failures that might cause harm and take appropriate remedial actions. Buyer will fully indemnify TI and its representatives against any damages arising out of the use of any TI components in safety-critical applications.

In some cases, TI components may be promoted specifically to facilitate safety-related applications. With such components, TI’s goal is to help enable customers to design and create their own end-product solutions that meet applicable functional safety standards and requirements. Nonetheless, such components are subject to these terms.

No TI components are authorized for use in FDA Class III (or similar life-critical medical equipment) unless authorized officers of the parties have executed a special agreement specifically governing such use.

Only those TI components which TI has specifically designated as military grade or “enhanced plastic” are designed and intended for use in military/aerospace applications or environments. Buyer acknowledges and agrees that any military or aerospace use of TI components which have ***not*** been so designated is solely at the Buyer's risk, and that Buyer is solely responsible for compliance with all legal and regulatory requirements in connection with such use.

TI has specifically designated certain components as meeting ISO/TS16949 requirements, mainly for automotive use. In any case of use of non-designated products, TI will not be responsible for any failure to meet ISO/TS16949.

Products		**Applications**	
Audio	www.ti.com/audio	Automotive and Transportation	www.ti.com/automotive
Amplifiers	amplifier.ti.com	Communications and Telecom	www.ti.com/communications
Data Converters	dataconverter.ti.com	Computers and Peripherals	www.ti.com/computers
DLP® Products	www.dlp.com	Consumer Electronics	www.ti.com/consumer-apps
DSP	dsp.ti.com	Energy and Lighting	www.ti.com/energy
Clocks and Timers	www.ti.com/clocks	Industrial	www.ti.com/industrial
Interface	interface.ti.com	Medical	www.ti.com/medical
Logic	logic.ti.com	Security	www.ti.com/security
Power Mgmt	power.ti.com	Space, Avionics and Defense	www.ti.com/space-avionics-defense
Microcontrollers	microcontroller.ti.com	Video and Imaging	www.ti.com/video
RFID	www.ti-rfid.com		
OMAP Applications Processors	www.ti.com/omap	**TI E2E Community**	e2e.ti.com
Wireless Connectivity	www.ti.com/wirelessconnectivity		

Mailing Address: Texas Instruments, Post Office Box 655303, Dallas, Texas 75265
Copyright © 2016, Texas Instruments Incorporated