3rd/2nd Gen Intel® Core™
15" Heavy Industrial Touch Panel PC

TPC150

H61

Features

- 15" 1024x768 TFT LCD Panel with Touch Screen
- 2x 2.5" SATA drive bays
- 2 USB 2.0 at the front panel for easy access
- 5 function keys at the front panel
- Built-in antenna for optional Wi-Fi
- VESA/Wall/Panel Mount

E131107

Optional Optical Drive

Panel

Front View

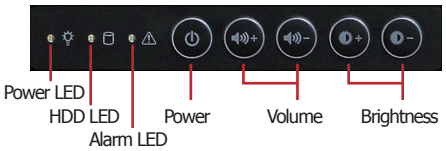

Function keys (standard)

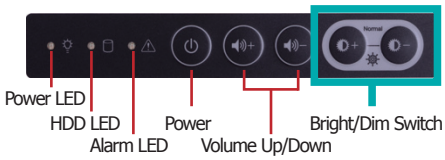

Bright/Dim Switch (optional)

Press the buttons simultaneously to switch the screen between bright and dim.

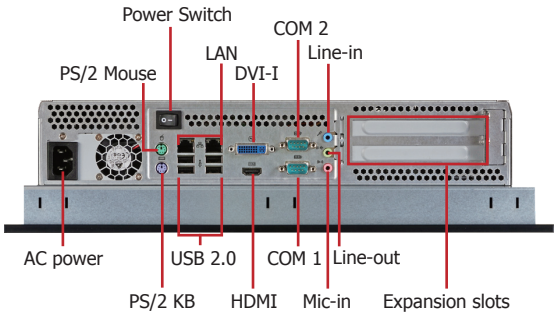

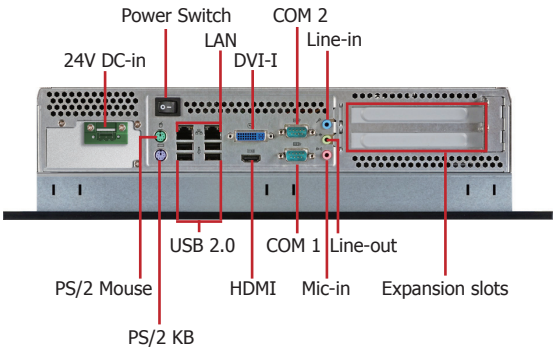

Bottom View

TPC150

Specifications

** Optional and is not supported in standard model. Please contact your sales representative for more information.*

PROCESSOR SYSTEM
- Processors:
  - 3rd generation Intel® Core™ processors
  - 2nd generation Intel® Core™ processors
  - Supports up to 65W TDP
- Intel H61 Express chipset

MEMORY
- Two DDR3 1333/1600MHz SODIMM sockets (3rd generation processors)
  Two DDR3 1066/1333MHz SODIMM sockets (2nd generation processors)
- Supports up to 16GB system memory

LCD and TOUCH SCREEN
- 15" 1024x768 TFT LCD panel with touch screen
- Supports 5-wire Resistive Touch
- 50,000 MTBF LED backlight
- Brightness (cd/m²): 250

GRAPHICS
- Intel® HD Graphics
- Display ports: HDMI and DVI-I
- HDMI and DVI-I display resolution up to 1920x1200

STORAGE
- 2 2.5" SATA drive bays
  - SATA 2.0 port with data transfer rate up to 3Gb/s
- 1 optical drive bay*

ETHERNET
- 1 Intel® W82579LM Gigabit Ethernet controller
- 1 Intel® W82574L Gigabit Ethernet controller

AUDIO
- Realtek ALC886 5.1-channel High Definition Audio
- Two 3W speakers (left and right sides)

COM
- 1 RS232/422/485 COM port
- 1 RS232 COM port

USB
- 2 Type A USB 2.0/1.1 ports at the front panel
- 4 Type A USB 2.0/1.1 ports at the bottom

I/O
- Front
  - 2 Type A USB 2.0/1.1 ports
  - 5 function keys: power, volume, and brightness
  - 3 LED indicators: Power, HDD, Alarm
  - 1 built-in antenna
- Bottom
  - 1 DB-9 RS232/422/485 COM
  - 1 DB-9 RS232 COM
  - 1 PS/2 keyboard
  - 1 PS/2 mouse
  - 4 Type A USB 2.0/1.1
  - 3 audio jacks: Mic-in, Line-in, Line-out
  - 2 RJ45 LAN with LEDs
  - 1 DVI-I
  - 1 HDMI
  - 1 power switch

EXPANSION
- 1 PCIe x1 and 1 PCI (X100-3PE2)
- 2 PCI (X100-2P1M)
- 2 Mini PCIe
  - Supports PCIe and USB signals for Wi-Fi module
  - Supports half/full size Mini PCIe card

POWER
- Power input voltage
  - Standard: ATX power type, AC 100-240V, 3.5A, 250W
  - Option: 24V DC-in 3-pole terminal block
  - Available upon request: 12V and 30V DC-in 3-pole terminal block

COOLING SYSTEM
- Smart fan system control suitable for quiet environments

ENVIRONMENT
- Temperature
  - Operating: -10°C ~ 50°C
  - Storage: -20°C ~ 60°C
- Relative Humidity
  - 90% RH at 50°C, 1 week
- Corrosion
  - 4 periods of 7 days at 50°C with 90-95% relative humidity after 2 hours salt spray or waiver

VIBRATION
- Operating: 1G, 5~500Hz
- Non-operating: 1.5G, 5~25Hz
- IEC 68-2-64 compliant

SHOCK
- Operating: 3G peak acceleration (11 msec. duration)
- Non-operating: 10G peak acceleration (11 msec. duration)
- IEC 68-2-27 compliant

FRONT PANEL PROTECTION
- IP65 (Dust Tight; Water Proof protection)

CONSTRUCTION
- Aluminum front bezel
- Rear panel: sheet metal

MOUNTING
- VESA mount: 75x75 and 100x100
- Wall mount bracket*
- Panel mount: mounting clamp*

DIMENSIONS
- 410mm x 320mm x 106mm (W x H x D)

WEIGHT
- 7.8 kg

OS SUPPORT
- Windows XP, WES 2009, POSReady 2009, Windows 7, WES 7
- Linux (Distribution available upon request)

CERTIFICATION
- CE
- FCC Class A
- RoHS
- UL

TPC150

Dimensions

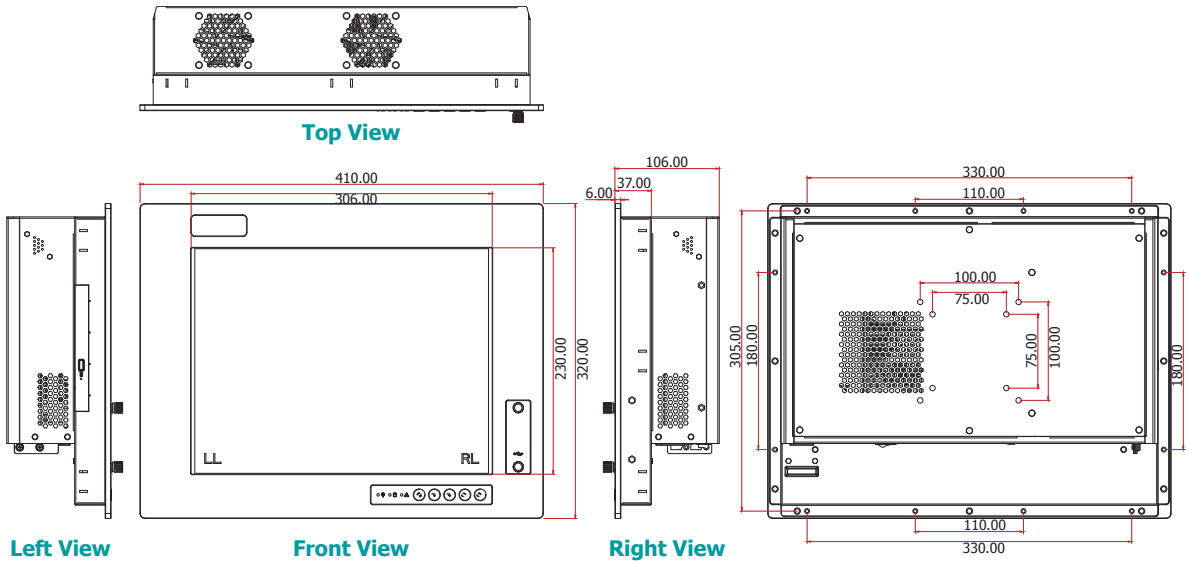

Wall Mounting

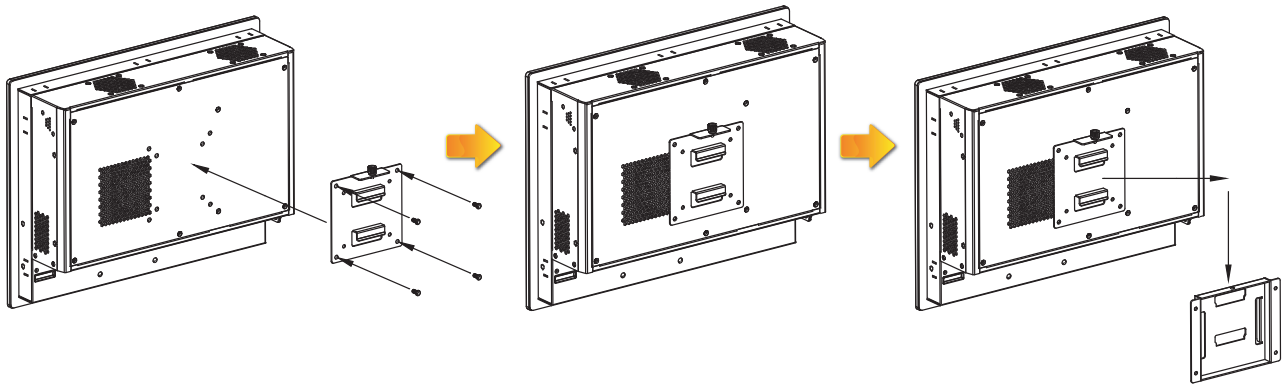

Panel Mounting

Suggested cut out size
(The flat panel thickness is less than 10mm)

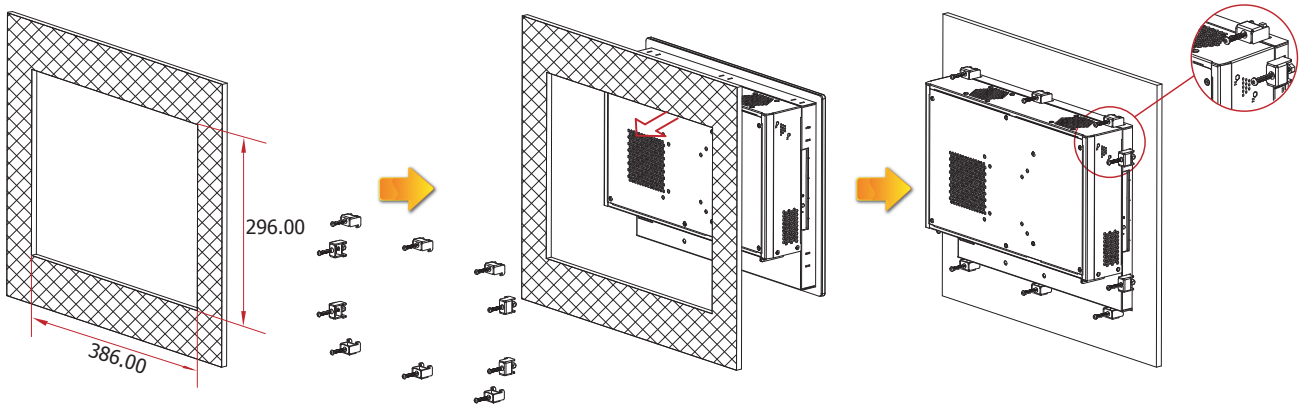

TPC150

Ordering Information

Model Name	Part Number	Description
TPC1502TR-SBACR-R10	750-TPC150-000G	15" Panel PC, H61 chipset, Aluminum Front Bezel, Resistive Touch, AC input, 1 PCIe x1, 1 PCI, 2 Mini PCIe
TPC1502TR-SBACR-R11	750-TPC150-600G	15" Panel PC, H61 chipset, Aluminum Front Bezel, Resistive Touch, AC input, 2 PCI, 2 Mini PCIe
TPC1502TR-SBDCMR-R10	750-TPC150-700G	15" Panel PC, H61 chipset, Aluminum Front Bezel, Resistive Touch, 16~30V DC-in terminal block, 1 PCIe x1, 1 PCI, 2 Mini PCIe
TPC1502TR-SBDCMR-R11	750-TPC150-800G	15" Panel PC, H61 chipset, Aluminum Front Bezel, Resistive Touch, 16~30V DC-in terminal block, 2 PCI, 2 Mini PCIe

Optional Items

Optional Items	Part Number	Description
CPU	785-CP1155DL	CPU, LGA 1155, Long-term support, RoHS
Memory	785-RSOD38G-L	SODIMM, DDR3L Module (supports dual voltage 1.5V DDR3/1.35V DDR3L), 8GB, RoHS
	785-RSOD34G-L	SODIMM, DDR3L Module (supports dual voltage 1.5V DDR3/1.35V DDR3L), 4GB, RoHS
	785-RSOD32G-L	SODIMM, DDR3L Module (supports dual voltage 1.5V DDR3/1.35V DDR3L), 2GB, RoHS
	785-RSOD31G	SODIMM, DDR3 Module, 1GB, RoHS
HDD	785-H25500G	2.5" SATA HDD, 500GB, RoHS
	785-H25320G	2.5" SATA HDD, 320GB, RoHS
Wi-Fi	761-110091-000G	Wi-Fi kit, RoHS
Power Cord	785-PWRD	Power cord, Standards (USA/EUR/CH), 1.8m, RoHS
Wall Mount	785-PPCWMK	Standard Panel PC Wall Mount kit
Panel Mount	785-150PMK	15" Panel PC Panel Mount kit
DVD-ROM	785-STDDRW	Slim Type SATA DVD-RW/DVD ROM
CD-RW ROM	785-STCDRW	Slim Type SATA CD-RW/DVD ROM

Packing List

- 1 TPC150 Touch Panel PC
- 1 120W power adapter (only for model TPC-1502TR-SBDCMR-R10 and TPC-1502TR-SBDCMR-R11)
- 1 Quick Installation Guide
- 1 CD disk includes:
  - Drivers / Manual

DFI reserves the right to change the specifications at any time prior to the product's release. Changes thereafter will be based on the product's revision. Please contact your sales representative for the exact revision offered in your area. All product names mentioned are trademarks of their respective companies. © July 8, 2015 DFI Inc.