TPC/LR-50-XS series

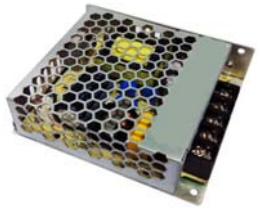

DESCRIPTION: **50-52.8W Wide input AC/DC switching power supply**

The rated output power of TPC/LR-50-XS series is 50-52.8W, input voltage range: 90-264VAC, output voltage : 5V,12V,15V,24V,36V,48V,High reliability, precision,effificency , ultra-small size, no external heat sink required, stable output voltage and etc, with over current protection, EMI filter circuit, the rectifier filter circuit, 3000V isolation voltage, short circuit, overload, internal thermal protection, Widely used in telecommunications, industrial control, instrument, data acquisition, signal control , New Energy, Security,and other electronic systems.

FEATURES

AC input : 90VAC-264VAC	100% full load burn-in test	short circuit, overload,over-voltage protection
Operating temperature: -30℃~70℃	RoHS complaint	Low standby power consumption<0.5W
All using 105℃ long-life electrolytic capacitors	High reliability,effificency	Full compliance with safety regulation,EMC design

SELECTION GUIDE

Part Number	Input		Output					
	Volatge (VAC)		Voltage (VDC)	Pre-set voltage @25℃(V)	Rated current (A)	Current range(A)	Rated power(W)	Efficiency @25℃, (Typ) %
	Rated	Range values						
TPC/LR-50-5S	220	90-264	5	5.00-5.05	10.0	0-10.0	50.0	83
TPC/LR-50-12S	220	90-264	12	12.00-12.10	4.20	0-4.20	50.4	86
TPC/LR-50-15S	220	90-264	15	15.00-15.10	3.40	0-3.40	51.0	88
TPC/LR-50-24S	220	90-264	24	24.00-24.10	2.20	0-2.20	52.8	88
TPC/LR-50-36S	220	90-264	36	36.00-36.10	1.45	0-1.45	52.2	89
TPC/LR-50-48S	220	90-264	48	48.00-48.10	1.10	0-1.10	52.8	90

All specifications typical at TA=25°C, nominal input voltage and rated output current unless otherwise specified.

OUTPUT CHARACTERISTICS

Conditions	Conditions	Parameter
Ripple and noise,Ta is ambient , 0＜Ta≤70℃	5V output voltage	≤80mVp-p
	12V, 15V output voltage	≤120mVp-p
	24V, 36V,48V output voltage	≤200mVp-p
Ripple and noise,Ta is ambient , -30＜Ta≤0℃	5V output voltage	≤120 mVp-p
	12V,15V output voltage	≤200mVp-p
	24V,36V output voltage	≤300mVp-p
	48V output voltage	≤500mVp-p
Dynamic load characterstics, -30＜Ta≤70℃	5V output voltage	1A-10A<±650mv 1A~5A:<±450mV 5A~10A: <±450mV
	12V output voltage	0.42A-4.2A:<±650mv 0.42A~2.1A<±450mv 2.1A~4.2A <±450mV
	15V output voltage	0.34A-3.4A:<±650mv 0.34A~1.7A:<±450mv 1.7A~3.4A: <±450mV
	24V output voltage	0.22A-2.2A:<±650mv 0.22A~1.1A<±450mv 1.1A~2.2A: <±450mV
	36V output voltage	0.14A-1.4A<±650mv 0.14A~0.7A<±450mv 0.7A~1.4A <±450mV
	48V output voltage	0.11A-1.1A:<±650mv 0.08A~0.55A<±450mv 0.55A~1.1A <±450mV
Output adjustment range @25℃	5V output voltage	4.5V-5.5V
	12V output voltage	10.8V-13.2V
	15V output voltage	13.5V~16.5V
	24V output voltage	21.6V-26.4V
	36V output voltage	32.4V~39.6V
	48V output voltage	43.2V-52.8V

Download from alldatasheet.com

Voltage regulation accuracy@-30~70℃	±3%
Line regulation@-30~70℃	±0.5%
Load regulation@-30~70℃	±1%
Temp. coefficient@-25~70℃	±0.03%/℃
Set-up time@25℃	≤1S /230Vac full load
Hold-up time@25℃	≥15mS(230Vac input, Full load)
Overshoot&Undershoot@-30~70℃	<5.0%

INPUT CHARACTERISTICS

Conditions	Parameter
Input voltage range	90Vac~264Vac
Max. input voltage	300Vac input,no damage，dwell time 5000 mS
Rated input voltage range	100Vac~240Vac
Frequency Range	47Hz~63Hz
Set-up voltage@-30~70℃	90Vac（refer to the derating curve）
Input current@25℃	<1A@115Vac
Inrush current @25℃	50A@230Vac Cold start
Standby power@25℃	＜0.5W

PROTECTION @-30～70℃

Conditions	Parameter	Notes
Over-power（5Voutput）	55W~90W	110%~180% rated power, hiccup mode, auto recovery
Over-power（12Voutput）	55.5W~90W	
Over-power（15Voutput）	56.5W~90W	
Over-power（24Voutput）	58W~90W	
Over-power（36Voutput）	57.4W~90W	
Over-power（48Voutput）	58W~90W	
Over-voltage（5Voutput）	5.75V~6.9V	110%~180% rated current, hiccup mode, auto recovery
Over-voltage（12Voutput）	13.8V~16.2V	
Over-voltage（15Voutput）	18.75V~21.75V	
Over-voltage（24Voutput）	28.8V~33.6V	
Over-voltage（36Voutput）	41.4V~48.6V	
Over-voltage（48Voutput）	55.2V~64.8V	
Over-current（5Voutput）	11A~18A	115%~150% rated voltage, hiccup mode, auto recovery
Over-current（12Voutput）	4.62A~7.5A	
Over-current（15Voutput）	3.74A~6A	
Over-current（24Voutput）	2.42A~3.75A	
Over-current（36Voutput）	1.6A~2.5A	
Over-current（48Voutput）	1.21A~1.875A	
Output short circuit protection	Long-term mode, Auto recovery	

ENVIRONMENT CHARACTERISTICS

Conditions	Parameter
Operating amb. Temp.&Humi.	-30℃~70℃； 20%~90%RH No condensing （refer to the derating curve）
Storage Temp. & Humi.	-40℃~85℃； 10%~95%RH No condensing
Vibration	10 ~ 500Hz, 5G 10min./1cycle, period for60min. each along X,Y, Z axes
Pulse	20G/11mS pulse ,3 times at each X,Y,Z axes
Altitude	5000m

TOPPOWER

Download from alldatasheet.com

SAFETY&EMC STANDARDS @25℃

Conditions	Parameter
Safety Standards	UL60950-1, TUV EN60950-1, EN60335-1, EN61558-1/-2-16,CCC GB4943
Withstand Voltage	I/P-O/P:3.0KVac/10mA; I/P-FG:1.5KVac/10mA; O/P-FG:0.5KVdc/10mA test time:1min.
Grounding test	Test condition：40A / 2min.；Grounding resistance：<0.1 ohms.
Leakage Current	I/P-Grounding≤3.5mA； I/P-O/P ≤0.25mA
Isolation resistance	I/P-O/P: 100M ohms; I/P-FG : 100M ohms; O/P-FG : 100M ohms
EMC emission	EN55022 Class B/FCC Part15 Class B
EMC immunity	EN61000-4-2,4,5 Leve3 Criteria A , EN61000-4-11

OTHERS

Conditions	Parameter
Cooling method	Cooling by free air flow
Dimension (L*W*H)	99*82*30mm
Net Weight	0.23kg

RELIABIILITY CHARACTERISTICS

Conditions	Parameter
MTBF	200,000Hrs AT 25℃, MIL-217 Method 2 Components Stress Method

MECHANICAL DIMENSIONS

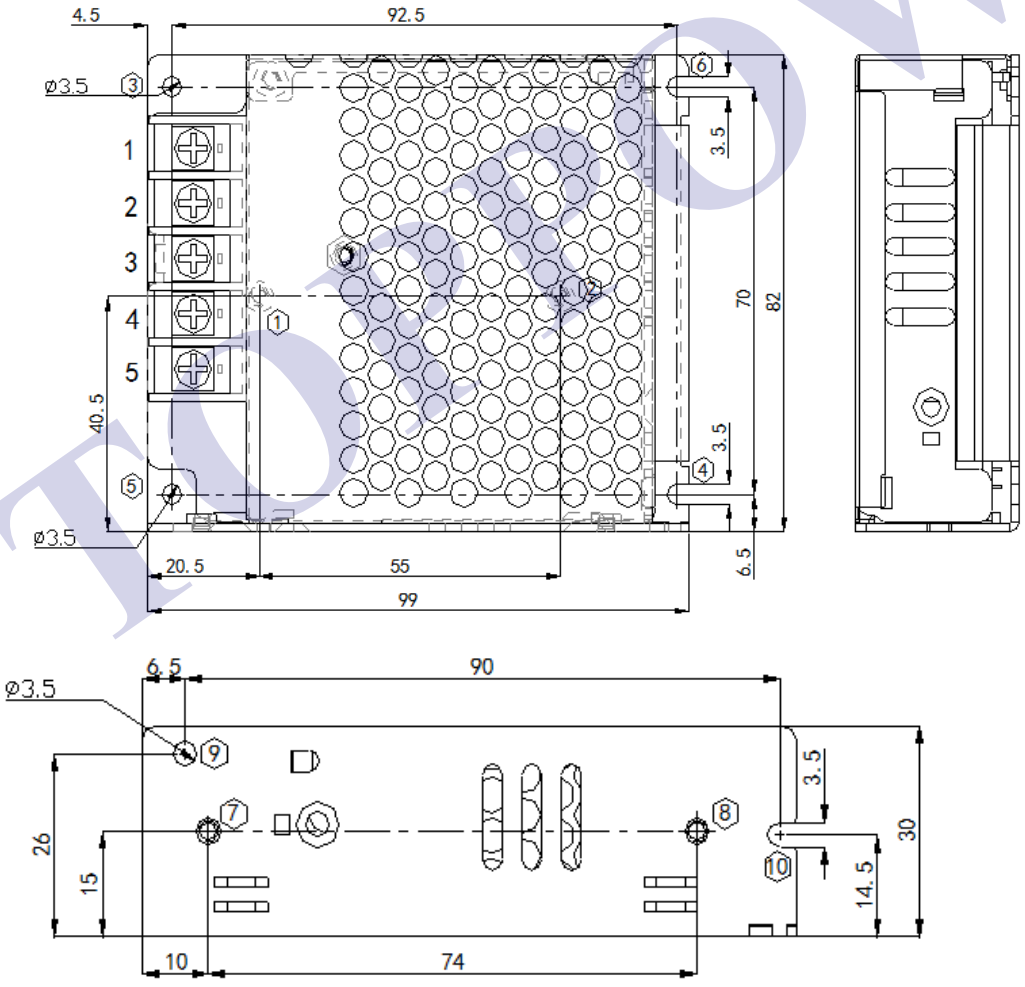

TOPPOWER

Download from alldatasheet.com

MECHANICAL DIMENSIONS

Mounting Position	Mounting Type	Mounting Position No.	Screw Type	Lmax	Mounting Torque(max)
Bottom Mounting	Fixing by screws	①—②	M3	4.0mm	6.5Kgf.cm (max)
		③—④	M3	4.0mm	
		⑤—⑥	M3	4.0mm	
Side Mounting	Fixing by screws	⑦—⑧	M3	4.0mm	6.5Kgf.cm (max)
		⑨—⑩	M3	4.0mm	

Notice:

1. Dimensional Unit: mm
2. Unmarked Tolerance is GB/T 1804-m
3. Choose the best installation method.

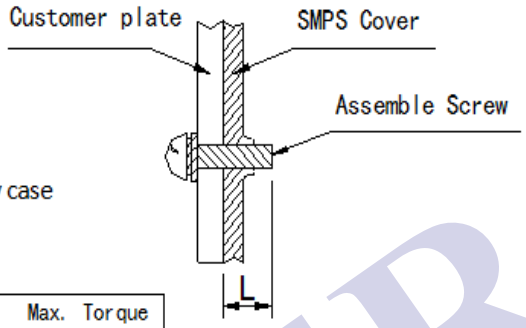

Remarks: 1. For safety purpose, the length of screw inside the power supply case shall comply with the above table (refer the right drawing)

1. Instruction of the AC Input Connectors

Part number	Function	Connector	Requirement for Cables	Max. Torque
1	AC(L)	95 Terminal Block	22-12AWG	12Kgf.cm (max)
2	AC(N)			
3	⏚			

2. Instruction of the DC Output Connectors

Part number	Function	Connector	Requirement for Cables	Max. Torque
4	V-	95 Terminal Block	22-12AWG	12Kgf.cm (max)
5	V+			

RECOMMEND CIRCUIT

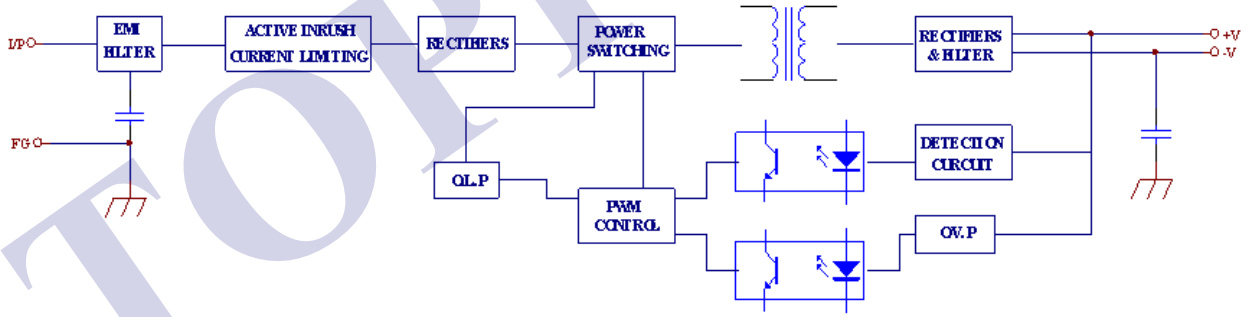

DERATING CURVE

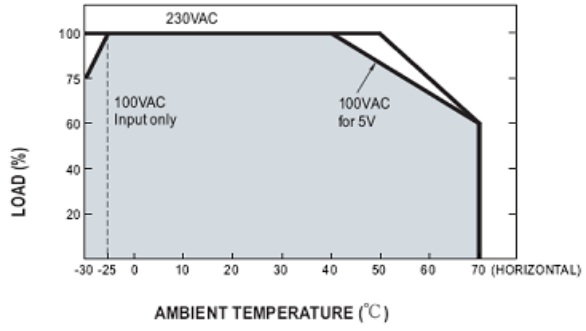

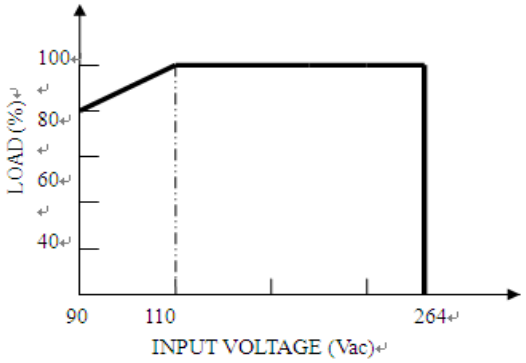

Download from alldatasheet.com

OUTPUT CHARACTERISTICS CURVE

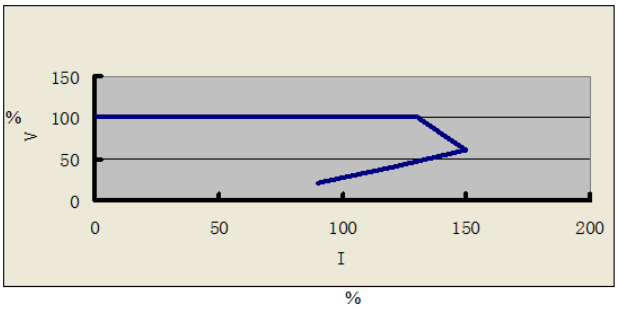

MODEL SELECTION

TP C / LR -50 – 12 S

- S: Single ouput; D: Dual output
- Output voltage
- Delimiter
- Rated output power
- Delimiter
- Series
- Delimiter
- Type
- Brand
  TOPPOWER

TOPPOWER

Download from alldatasheet.com