TOTAL POWER INT'L

UNIVERSAL AC INPUT HARMONIC CORRECTION AC-DC HOT-SWAP CompactPCI QUAD OUTPUT 250 WATTS ACTIVE CURRENT SHARING SWITCHING POWER SUPPLIES TPAC250P SERIES



FEATURES:

- **250W 3U X 8HP EUROCARD PACKAGE**
- **MEET IEC1000-3-2 HARMONIC CORRECTION**
- **INTERNAL OR-ING DIODES FOR N+1 REDUNDANCY**
- **HOT-SWAPPABLE**
- **THIRD-WIRE CURRENT SHARING**
- **EMI MEET EN 55022 / FCC CLASS A**
- **CE MARKING COMPLIANCE**
- **FULLY COMPLIANT WITH PICMG**

SPECIFICATION

INPUT SPECIFICATION

Input Voltage: Typ. 90-264Vac.
Power Factor Correction: Meet Harmonic Correction IEC1000-3-2.Power Factor typ. 0.95-0.97.
Input Connector: Positronic 47-pin PCIH47M400A1.
Input Frequency: 47-63Hz.
Inrush Current: Less than 30A @ 230Vac.
Input Current: 2.8A @115Vac/1.4A @230Vac.
Dielectric Withstand: Meet IEC950 regulation.
EMI: Meet EN55022 / FCC Class A.
Hold-up Time: 5mS after power fail signal.
Earth Leakage: Less than 0.5mA @230Vac.
Remote ON/OFF: Available at [INH#] & [EN#] pins.
Power Fail Signal: Available at [FAL#] pin.
Status LED: <Green> means valid input voltage. <Amber> means a critical fault.
Thermal Protection (OTP): Installed NTC and thermostat for thermal sensor at [DEG#] pin.
Power OK: Installed at all outputs.
Leakage Current: Typ. 0.5mA.

OUTPUT SPECIFICATION

Output Voltage: See Ratings Chart.
Output Current: See Ratings Chart.
Output Wattage: Typ. 250W continuous.
Output Connector: Positronic 47-pin PCIH47M400A1.
Line Regulation: Typ. 0.1%.
Load Regulation: Typ. ±1-2%.
Noise & Ripple: Typ. 1% peak to peak or 50mV, which is greater.
OVP: Built-in at all outputs.
Adjustability: Available at VO1,2&3.
Output Trim: Electrical trim available at VO1 / VO2.[ADJ #].
Remote Sensing: Available at VO1,VO2 & VO3.
Hot-Swap: Available.
N+1 Redundancy: Installed with internal OR-ing diodes at all outputs for N+1 redundancy operation.
Current Sharing: Third-wire current sharing at VO1,2 &3.
Power OK Signal: Available for all output.
Over Current Protection (OCP): Installed at each rail.
Overload Protection (OLP): Fully protected against output overload or short circuit. Typical 120% max. load. Consult the factory for special OLP setting.

GENERAL SPECIFICATION

Efficiency: Typ. 78-79 %.
Switching Frequency: 120K Hz.
Circuit Topology: Forward circuit.
Transient Response: Peak transient less than 100mV and recovers within 2mS after 25% load-change.
Safety Standard: IEC60950 Class I.
Construction: Eurocard 3U X 8HP X 160mm CompactPCI format. Front Panel with either Ordinary handle or Extractor handle.

Operating Temperature: 0 to +50 °C at full load with specified air flow. Derates linearly to 50% at +70 °C.
Storage Temperature: -40 to +85 °C.
Temperature Coefficient: Typ. ±0.02% / °C.
Cooling: At least 20 cfm(600 lfm) moving air is required to achieve full rating power 250W in a confined area.
Power Density: 4.58 Watts/ Cubic Inch.

Remark: All measurements are at nominal input, full load and +25°C unless otherwise specifications.

In application

TOTAL POWER, INT. Tel: 877-646-0900 Fax: 978-453-7395
Email: sales@total-power.com http://www.total-power.com

OUTPUT VOLTAGE/CURRENT RATINGS CHART

QUAD OUTPUT

MODEL NO.	MAIN +VO1 @★#≡⊙				AUX. +VO2 ▲@★#≡⊙				AUX. +VO3 ▲≡#⊙★@					AUX. –VO4 ●⊙★■=				
	Min.	Typ.	**Volt.**	Max.	Min.	Typ.	**Volt.**	Max.	Min.	Typ.	**Volt.**	Max.	Pk.	Min.	Typ.	**Volt.**	Max.	Pk.
TPAC250P-490(E)	2.0A	25.0A	**+5V**	33.0A	0A	18A	**+3.3V**	33A	0A	5A	**+12V**	5.5A	6A	0A	0.5A	**-12V**	1A	1.5A
TPAC250P-490(O)	2.0A	25.0A	**+5V**	33.0A	0A	18A	**+3.3V**	33A	0A	5A	**+12V**	5.5A	6A	0A	0.5A	**-12V**	1A	1.5A

Symbol: "★" OVP built-in. "@" Adjustable. "#" Remote sensing. "≡" 3rd-wire Load Sharing. "=" Droop Current Sharing.
"⊙" Installed with Or-ing diode. "▲" Magnetic Amplifier. "●" Installed with Post-regulator. "■" Common Choke.

Remark: Peak load less than 60sec. with duty cycle <10%.
Max. load is the continuous operating rating load of each rail. But the max. load of each rail can't be drawn from all outputs at the same time.

MECHANICAL DIMENSIONS: MM [INCHES]

WEIGHT: 666.0 g (23.5 Oz.)

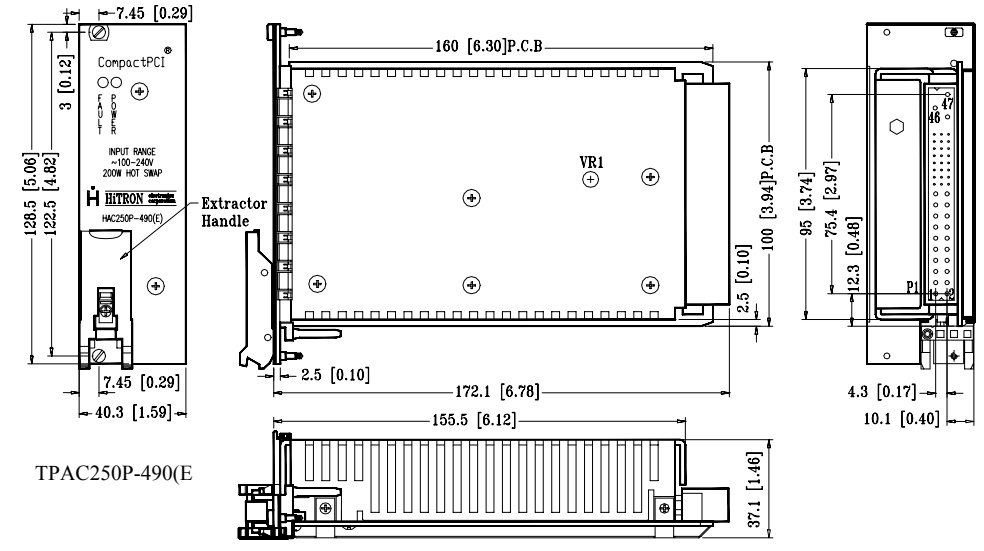

TPAC250P-490(E

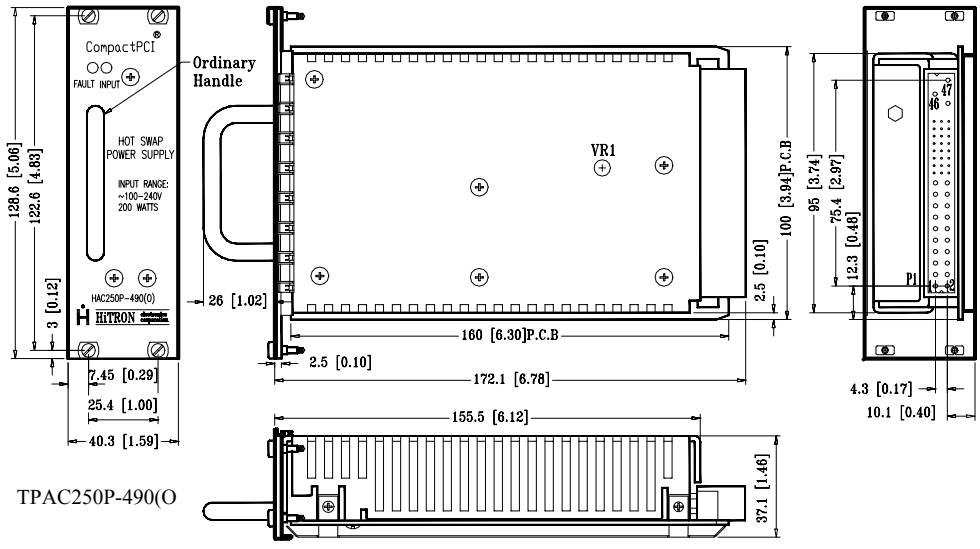

TPAC250P-490(O

INPUT & OUTPUT CONNECTORS PIN ASSIGNMENT

	AC INPUT			QUAD OUTPUT														STATUS/CONTROL			
ASSIGNMENT	**L**	**N**	**G**	**VO1**	**S+**	**S-**	**Adj.**	**C.S.**	**VO2**	**S+**	**Adj.**	**C.S.**	**VO3**	**S+**	**C.S**	**VO4**	**DC COM**	**EN#**	**DEG#**	**INH#**	**FAL#**
CNTR &PIN #	47	46	45	1,2, 3,4	30	34	29	35	13,14, 15,16, 17,18	33	32	41	20	36	44	21	5,6,7,8,9, 10,11,12, 19,22,24	27	38	39	42

Mating connector: PCIH47F400A1.