TPA6138A2 EVM

Contents

1 Introduction 1
2 Operation 3
3 Reference 4
4 TPA6138A2EVM Bill of Materials 6

List of Figures

1 TPA6138EVM Top View 1
2 TPA6138EVM Bottom View 2
3 Top Layer 5
4 Bottom Layer 5

List of Tables

1 TPA6138A2EVM Bill of Materials 6

1 Introduction

This section provides an overview of the Texas Instruments (TI) TPA6138A2 DirectPath™ stereo headphone amplifier evaluation module (EVM). It includes a brief description of the module and a list of EVM specifications.

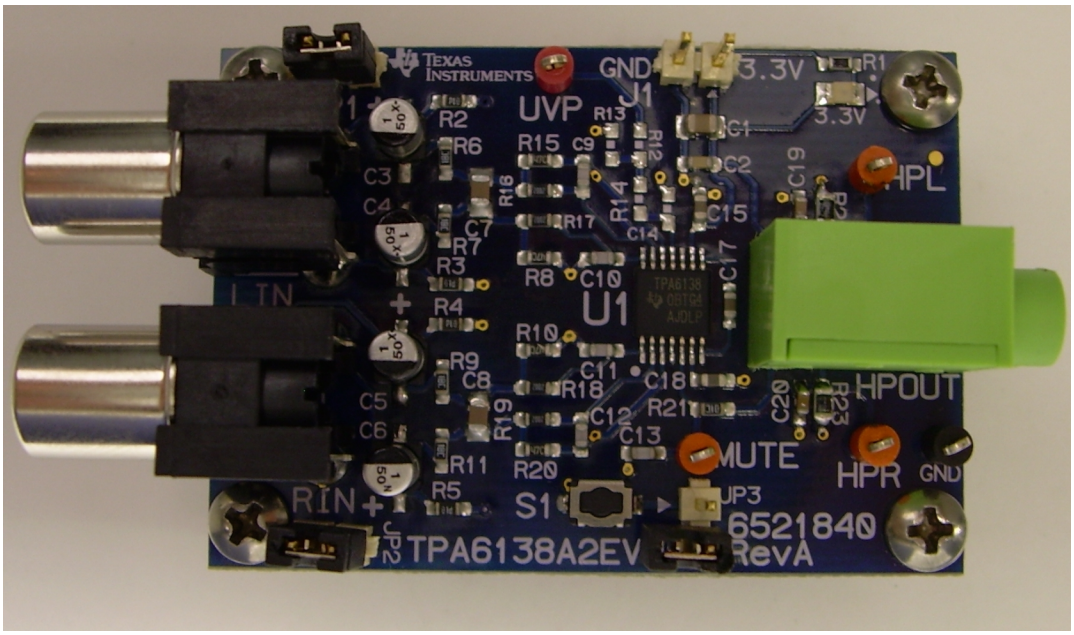

Figure 1. TPA6138EVM Top View

DirectPath is a trademark of Texas Instruments.

© 2010–2011, Texas Instruments Incorporated

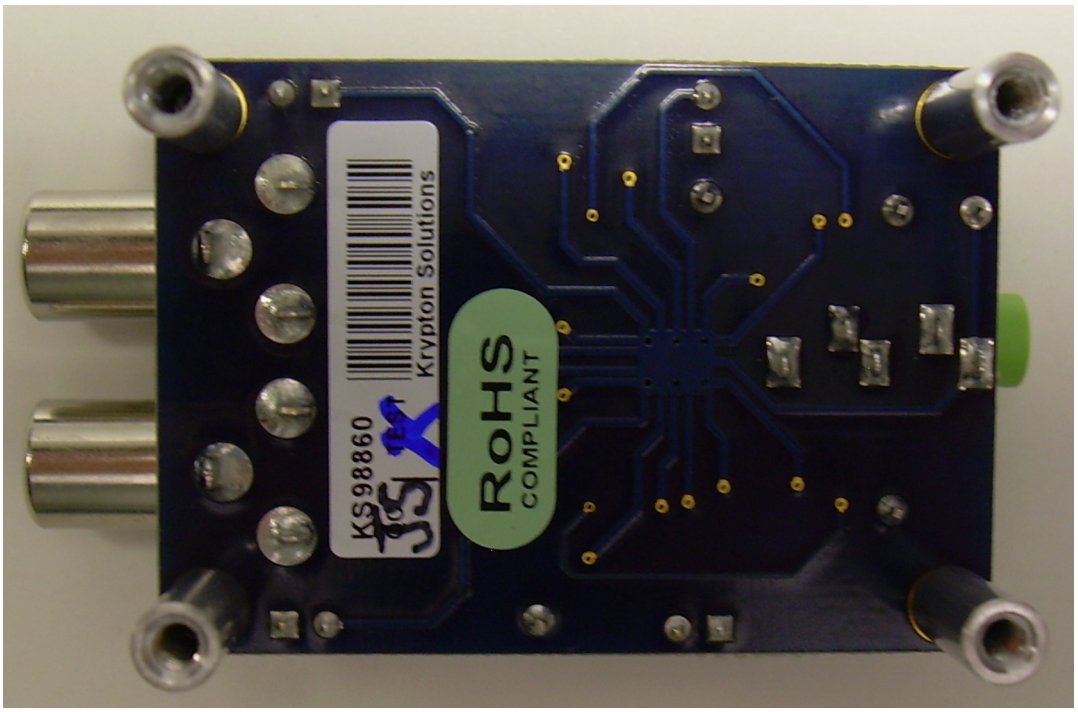

Figure 2. TPA6138EVM Bottom View

1.1 Description

The TPA6138A2 is a DirectPath™ stereo headphone amplifier capable of delivering 25 mW/Ch into 32 Ω and requires no output DC blocking capacitors.

The TPA6138A2 EVM is a complete, stand-alone audio board. It contains the TPA6138A2 TSSOP DirectPath™ stereo headphone amplifier.

1.2 EVM Specifications

Supply voltage range, V_{DD}	3 V to 3.6 V
Supply current, I_{DD}	0.5 A, maximum
Continuous output power, P_O, V_{DD} = 3.3 V, 32 Ω, THD+N < 1 %	20 mW

© 2010–2011, Texas Instruments Incorporated

2 Operation

This section describes how to operate the TPA6138A2EVM.

2.1 Quick-Start List for Stand-Alone Operation

Use the following steps when operating the TPA6138A2EVM stand alone or when connecting the EVM into an existing circuit.

2.1.1 Power and Ground

1. Verify that the external power sources are set to OFF.
2. Set the power supply voltage between 3 V and 3.6 V. When connecting the power supply to the EVM, first connect the ground connection to the GND connector, and then connect the positive supply to the V_{DD} connector. Verify that the connections are made to the correct banana jacks.

2.1.2 Inputs and Outputs

2.1.2.1 Audio

1. Verify that the audio source is set to the minimum level.
2. Connect the audio source to the inputs, LIN and RIN. Shunt JP1 and JP2 for single-ended input.
3. Connect a headset or other load to the headphone jack.

2.1.2.2 Shutdown Controls

1. Shutdown is controlled by pushbutton S1. Press and hold S1 to place the TPA6138A2 in shutdown. Release S1 to reactivate the TPA6138A2.

2.1.3 Power Up

1. Verify the correct connections as described in the Power and Ground and Inputs and Outputs sections.
2. Verify the correct voltage setting of the power supply and turn ON the power supply. Proper operation of the EVM should begin.
3. Adjust the audio signal source as needed.

© 2010–2011, Texas Instruments Incorporated

3 Reference

This section includes the EVM schematic, board layout reference, and parts list.

3.1 TPA6138A2EVM Schematic

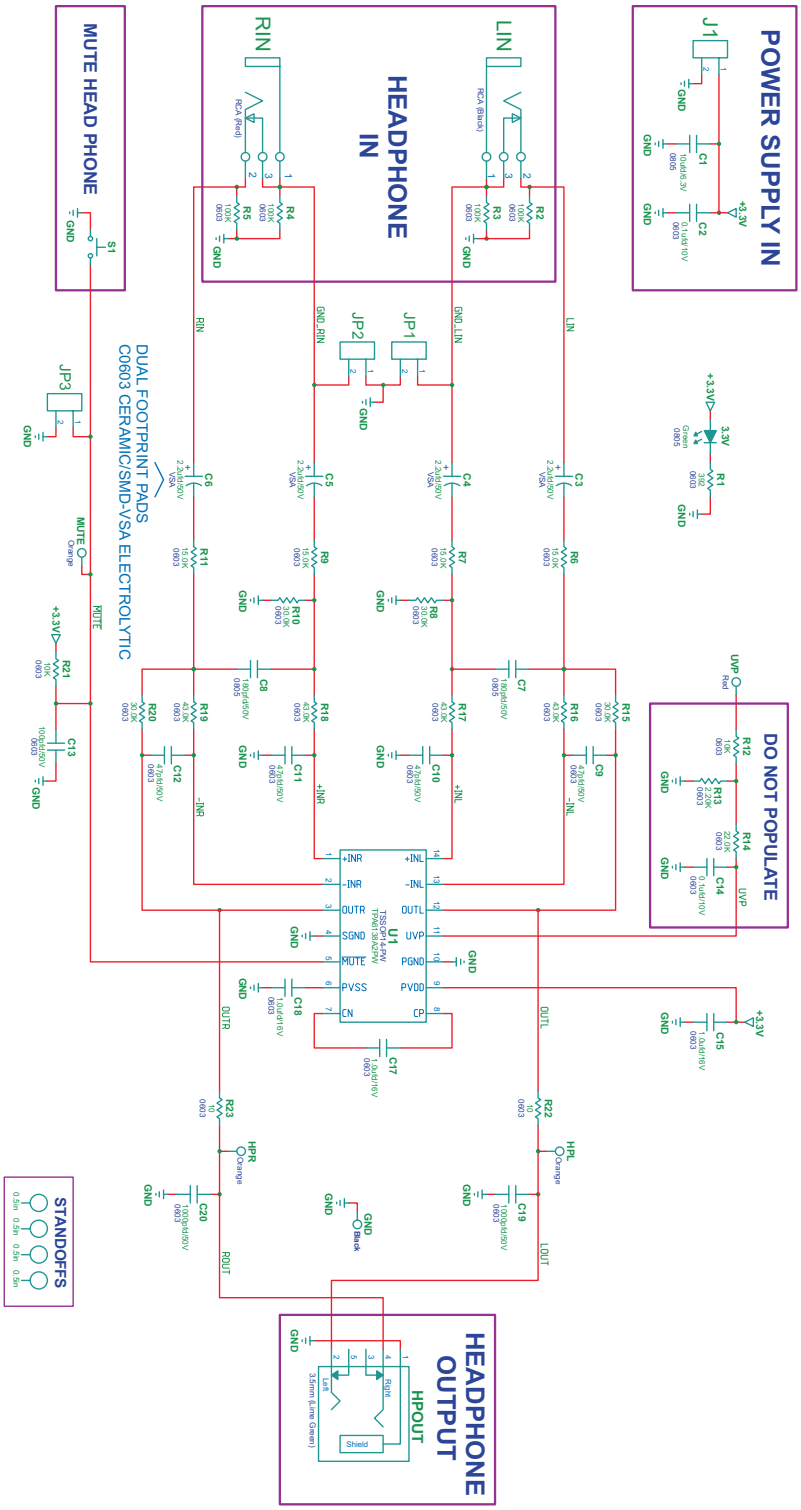

© 2010–2011, Texas Instruments Incorporated

3.2 TPA6138A2EVM PCB Layers

Figure 3. Top Layer

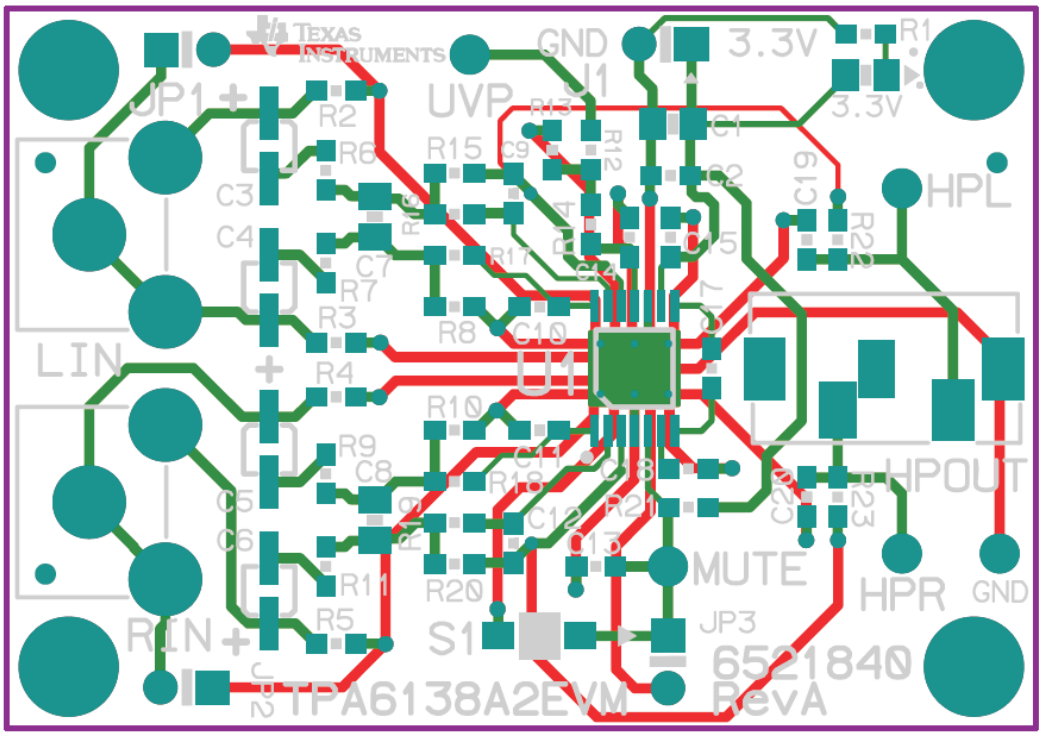

Figure 4. Bottom Layer

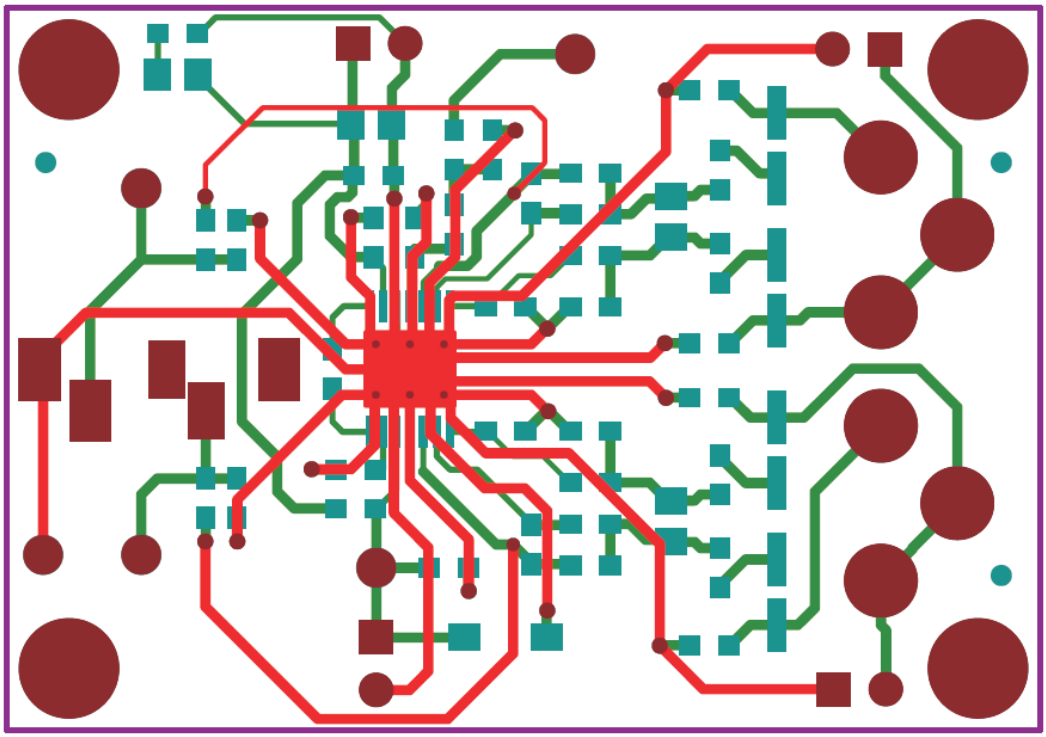

© 2010–2011, Texas Instruments Incorporated

4 TPA6138A2EVM Bill of Materials

Table 1. TPA6138A2EVM Bill of Materials

Qty.	Manfacturer Part No.	Ref Des	Description	Manufacturer
1	TPA6138A2PW	U1	DIRECTPATH 2V AUDIO LINE DRIVER W/ADJ GAIN TSSOP14-PW ROHS	TEXAS INSTRUMENTS
1	SML-LXT0805GW-TR	3.3V	LED, GREEN 2.0V SMD0805 ROHS	LUMEX OPTO
4	GRM1885C1H470JA01D	C9, C10, C11, C12	CAP SMD0603 CERM 47PFD 50V 5% COG ROHS	MURATA
1	GRM1885C1H101JA01D	C13	CAP SMD0603 CERM 100PFD 50V 5% COG ROHS	MURATA
2	CC0805JRNP09BN181	C7, C8	CAP SMD0805 CERM 180PFD 50V 5% NPO ROHS	YAGEO
2	C1608C0G1H102J	C19, C20	CAP SMD0603 CERM 1000PFD 50V 5% COG ROHS	TDK CORP.
1	C0603C104K8RACTU	C2	CAP SMD0603 CERM 0.1UFD 10V 5% X7R ROHS	KEMET
4	C1608X7R1C105K	C15, C17, C18	CAP SMD0603 CERM 1.0UFD 16V 10% X7R ROHS	TDK
4	EEE-1HS2R2SR	C3, C4, C5, C6	CAP ALUM-ELECT SMD-VSA 2.2UFD 50V 20% ROHS	PANASONIC
1	08056C106KAT2A	C1	CAP SMD0805 CERM 10UFD 6.3V X7R 10% ROHS	AVX
2	RC0603JR-0710RL	R22, R23	RESISTOR SMD0603 THICK FILM 10 OHMS 5% 1/10W ROHS	YAGEO
1	ERJ-3EKF3920V	R1	RESISTOR SMD0603 392 OHM 1% THICK FILM 1/10W ROHS	PANASONIC
1	ERJ-3GEYJ103V	R21	RESISTOR SMD0603 10K 5% 1/10W ROHS	PANASONIC
4	RMCF0603FT15K0	R6, R7, R9, R11	RESISTOR SMD0603 15.0K OHMS 1% 1/10W ROHS	STACKPOLE ELECTRONICS
4	RC0603FR-0743KL	R16, R17, R18, R19	RESISTOR SDM0603 20.0K OHM 1% THICK FILM 1/16W ROHS	YAGEO
4	RC0603FR-0730KL	R8, R10, R15, R20	RESISTOR SMD0603 THICK FILM 30.0K 1% 1/10W ROHS	YAGEO
4	RMCF0603JT100K	R2, R3, R4, R5	RESISTOR SMD0603 100K OHMS 5% 1/10W ROHS	STACKPOLE ELECTRONICS
4	PBC02SAAN	J1, JP1, JP2, JP3	HEADER THRU MALE 2 PIN 100LS GOLD ROHS	SULLINS
1	PJRAN1X1U01X	LIN	JACK, RCA 3-PIN PCB-RA BLACK ROHS	SWITCHCRAFT
1	PJRAN1X1U03X	RIN	JACK, RCA 3-PIN PCB-RA RED ROHS	SWITCHCRAFT
1	STX-3150-5N-577C	HPOUT	JACK MINI STEREO 3.5mm LIME GREEN W/SHUNTS ROHS	KYCON
1	5000	UVP	PC TESTPOINT, RED, ROHS	KEYSTONE ELECTRONICS
1	5001	GND	PC TESTPOINT BLACK ROHS	KEYSTONE ELECTRONICS
3	5003	HPL, HPR, MUTE	PC TESTPOINT ORANGE ROHS	KEYSTONE ELECTRONICS
1	TL1015AF160QG	S1	SWITCH, MOM, 160G SMT 4X3MM ROHS	E-SWITCH
3	SPC02SYAN	JP1, JP2, JP3	SHUNT, BLACK AU FLASH 0.100LS	SULLINS
4	PMS 440 0025 PH	NA	4-40 SCREW, STEEL 0.250 IN	BUILDING FASTENERS
4	2027	NA	STANDOF ,4-40 0.5IN 3/16IN DIA ALUM RND F-F	KEYSTONE ELECTRONICS

© 2010–2011, Texas Instruments Incorporated

Evaluation Board/Kit Important Notice

Texas Instruments (TI) provides the enclosed product(s) under the following conditions:

This evaluation board/kit is intended for use for **ENGINEERING DEVELOPMENT, DEMONSTRATION, OR EVALUATION PURPOSES ONLY** and is not considered by TI to be a finished end-product fit for general consumer use. Persons handling the product(s) must have electronics training and observe good engineering practice standards. As such, the goods being provided are not intended to be complete in terms of required design-, marketing-, and/or manufacturing-related protective considerations, including product safety and environmental measures typically found in end products that incorporate such semiconductor components or circuit boards. This evaluation board/kit does not fall within the scope of the European Union directives regarding electromagnetic compatibility, restricted substances (RoHS), recycling (WEEE), FCC, CE or UL, and therefore may not meet the technical requirements of these directives or other related directives.

Should this evaluation board/kit not meet the specifications indicated in the User's Guide, the board/kit may be returned within 30 days from the date of delivery for a full refund. THE FOREGOING WARRANTY IS THE EXCLUSIVE WARRANTY MADE BY SELLER TO BUYER AND IS IN LIEU OF ALL OTHER WARRANTIES, EXPRESSED, IMPLIED, OR STATUTORY, INCLUDING ANY WARRANTY OF MERCHANTABILITY OR FITNESS FOR ANY PARTICULAR PURPOSE.

The user assumes all responsibility and liability for proper and safe handling of the goods. Further, the user indemnifies TI from all claims arising from the handling or use of the goods. Due to the open construction of the product, it is the user's responsibility to take any and all appropriate precautions with regard to electrostatic discharge.

EXCEPT TO THE EXTENT OF THE INDEMNITY SET FORTH ABOVE, NEITHER PARTY SHALL BE LIABLE TO THE OTHER FOR ANY INDIRECT, SPECIAL, INCIDENTAL, OR CONSEQUENTIAL DAMAGES.

TI currently deals with a variety of customers for products, and therefore our arrangement with the user **is not exclusive.**

TI assumes **no liability for applications assistance, customer product design, software performance, or infringement of patents or services described herein.**

Please read the User's Guide and, specifically, the Warnings and Restrictions notice in the User's Guide prior to handling the product. This notice contains important safety information about temperatures and voltages. For additional information on TI's environmental and/or safety programs, please contact the TI application engineer or visit www.ti.com/esh.

No license is granted under any patent right or other intellectual property right of TI covering or relating to any machine, process, or combination in which such TI products or services might be or are used.

FCC Warning

This evaluation board/kit is intended for use for **ENGINEERING DEVELOPMENT, DEMONSTRATION, OR EVALUATION PURPOSES ONLY** and is not considered by TI to be a finished end-product fit for general consumer use. It generates, uses, and can radiate radio frequency energy and has not been tested for compliance with the limits of computing devices pursuant to part 15 of FCC rules, which are designed to provide reasonable protection against radio frequency interference. Operation of this equipment in other environments may cause interference with radio communications, in which case the user at his own expense will be required to take whatever measures may be required to correct this interference.

EVM Warnings and Restrictions

It is important to operate this EVM within the input voltage range of 0 V to 3 V and the output voltage range of 0 V to 3.3 V .

Exceeding the specified input range may cause unexpected operation and/or irreversible damage to the EVM. If there are questions concerning the input range, please contact a TI field representative prior to connecting the input power.

Applying loads outside of the specified output range may result in unintended operation and/or possible permanent damage to the EVM. Please consult the EVM User's Guide prior to connecting any load to the EVM output. If there is uncertainty as to the load specification, please contact a TI field representative.

During normal operation, some circuit components may have case temperatures greater than 85°C. The EVM is designed to operate properly with certain components above 85°C as long as the input and output ranges are maintained. These components include but are not limited to linear regulators, switching transistors, pass transistors, and current sense resistors. These types of devices can be identified using the EVM schematic located in the EVM User's Guide. When placing measurement probes near these devices during operation, please be aware that these devices may be very warm to the touch.

Mailing Address: Texas Instruments, Post Office Box 655303, Dallas, Texas 75265
Copyright © 2011, Texas Instruments Incorporated

IMPORTANT NOTICE

Texas Instruments Incorporated and its subsidiaries (TI) reserve the right to make corrections, modifications, enhancements, improvements, and other changes to its products and services at any time and to discontinue any product or service without notice. Customers should obtain the latest relevant information before placing orders and should verify that such information is current and complete. All products are sold subject to TI's terms and conditions of sale supplied at the time of order acknowledgment.

TI warrants performance of its hardware products to the specifications applicable at the time of sale in accordance with TI's standard warranty. Testing and other quality control techniques are used to the extent TI deems necessary to support this warranty. Except where mandated by government requirements, testing of all parameters of each product is not necessarily performed.

TI assumes no liability for applications assistance or customer product design. Customers are responsible for their products and applications using TI components. To minimize the risks associated with customer products and applications, customers should provide adequate design and operating safeguards.

TI does not warrant or represent that any license, either express or implied, is granted under any TI patent right, copyright, mask work right, or other TI intellectual property right relating to any combination, machine, or process in which TI products or services are used. Information published by TI regarding third-party products or services does not constitute a license from TI to use such products or services or a warranty or endorsement thereof. Use of such information may require a license from a third party under the patents or other intellectual property of the third party, or a license from TI under the patents or other intellectual property of TI.

Reproduction of TI information in TI data books or data sheets is permissible only if reproduction is without alteration and is accompanied by all associated warranties, conditions, limitations, and notices. Reproduction of this information with alteration is an unfair and deceptive business practice. TI is not responsible or liable for such altered documentation. Information of third parties may be subject to additional restrictions.

Resale of TI products or services with statements different from or beyond the parameters stated by TI for that product or service voids all express and any implied warranties for the associated TI product or service and is an unfair and deceptive business practice. TI is not responsible or liable for any such statements.

TI products are not authorized for use in safety-critical applications (such as life support) where a failure of the TI product would reasonably be expected to cause severe personal injury or death, unless officers of the parties have executed an agreement specifically governing such use. Buyers represent that they have all necessary expertise in the safety and regulatory ramifications of their applications, and acknowledge and agree that they are solely responsible for all legal, regulatory and safety-related requirements concerning their products and any use of TI products in such safety-critical applications, notwithstanding any applications-related information or support that may be provided by TI. Further, Buyers must fully indemnify TI and its representatives against any damages arising out of the use of TI products in such safety-critical applications.

TI products are neither designed nor intended for use in military/aerospace applications or environments unless the TI products are specifically designated by TI as military-grade or "enhanced plastic." Only products designated by TI as military-grade meet military specifications. Buyers acknowledge and agree that any such use of TI products which TI has not designated as military-grade is solely at the Buyer's risk, and that they are solely responsible for compliance with all legal and regulatory requirements in connection with such use.

TI products are neither designed nor intended for use in automotive applications or environments unless the specific TI products are designated by TI as compliant with ISO/TS 16949 requirements. Buyers acknowledge and agree that, if they use any non-designated products in automotive applications, TI will not be responsible for any failure to meet such requirements.

Following are URLs where you can obtain information on other Texas Instruments products and application solutions:

Products		**Applications**	
Audio	www.ti.com/audio	Communications and Telecom	www.ti.com/communications
Amplifiers	amplifier.ti.com	Computers and Peripherals	www.ti.com/computers
Data Converters	dataconverter.ti.com	Consumer Electronics	www.ti.com/consumer-apps
DLP® Products	www.dlp.com	Energy and Lighting	www.ti.com/energy
DSP	dsp.ti.com	Industrial	www.ti.com/industrial
Clocks and Timers	www.ti.com/clocks	Medical	www.ti.com/medical
Interface	interface.ti.com	Security	www.ti.com/security
Logic	logic.ti.com	Space, Avionics and Defense	www.ti.com/space-avionics-defense
Power Mgmt	power.ti.com	Transportation and Automotive	www.ti.com/automotive
Microcontrollers	microcontroller.ti.com	Video and Imaging	www.ti.com/video
RFID	www.ti-rfid.com	Wireless	www.ti.com/wireless-apps
RF/IF and ZigBee® Solutions	www.ti.com/lprf		
	TI E2E Community Home Page		e2e.ti.com

Mailing Address: Texas Instruments, Post Office Box 655303, Dallas, Texas 75265
Copyright © 2011, Texas Instruments Incorporated