TPA5051EVM

Contents

1 Introduction 1
2 Software 2
3 Operation 6
4 Reference 9
5 TPA5051EVM Schematic Diagram 12

List of Figures

1 TPA5051 in I²S Mode With Separate Delays for Left and Right Channels 3
2 TPA5051 in I²S Mode With Frame Delay 4
3 TPA5051 in Right-Justified Mode 5
4 TPA5051 in I²S Mode – Unable to Communicate 6
5 Top Layer of the TPA5051EVM 7
6 Bottom Layer of the TPA5051EVM 8
7 TPA5051EVM Top Layer 9
8 TPA5051EVM Second Layer 9
9 TPA5051EVM Third Layer 10
10 TPA5051EVM Bottom Layer 10

List of Tables

1 Bill of Materials 11

1 Introduction

1.1 Description

The TPA5051 evaluation module (EVM) consists of a single TPA5051 audio delay device, along with other external components mounted on a printed-circuit board (PCB) that can be used to independently delay two digital audio streams. Each digital audio stream consists of a left and right channel, both of which can be delayed up to 4095 samples (with a 48-kHz sampling rate, that equates to more than 85ms of delay).

The TPA5051EVM is designed to work seamlessly with the TI Input USB board, but can function as a stand-alone board for pass-through testing in any system. All that is required is an I²S audio source, an I²C controller, and a 5-V supply.

The TPA5051EVM also includes an onboard digital-to-analog controller (DAC), the PCM1606, which can convert I²S or left-justified data to an analog out. The analog out is filtered on the board and can be viewed with a scope probe.

National Instruments is a trademark of National Instruments Corporation.

1.2 TPA5051EVM Specifications

+5 V	Supply Voltage	5 V
I_{DD}	Supply current	150 mA maximum
I_{DD} (with TI Input USB board connected)	Supply current	500 mA maximum

2 Software

The included compact disk (CD) has all the software and drivers necessary to properly operate the TPA5051EVM with the TI Input USB board. This software is designed to work only with personal computers (PC). The installation software consists of *TPA505x Interface SAA*, *Command Tool*, and *.Net Framework 1.1*.

2.1 Installation

1. Open up the CD, and browse the directory named *TPA505x HD GUI Installer*.
2. Click on **setup.exe**. The installer will then initialize.
3. Next, the user must choose the directories in which to install the software. The default directory for the TPA505x Interface SAA software is *C:\Program Files\Texas Instruments Inc*\, and the default directory for the National Instruments™ files is *C:\Program Files\National Instruments*\. Other directories may be used, but for purposes of convenience, the default directories are recommended.
4. Once the directory selection has been made, click **next** to proceed.
5. The National Instruments™ License Agreement appears. It is necessary to read and accept this agreement to continue with the installation.
6. Once the National Instruments™ License Agreement has been accepted, another window indicating which components are to be installed appears. It should read *Adding or Changing - TPA505x Interface SAA Files*. Click **next** to proceed.
7. The TPA505x SAA Interface program then installs the necessary files.
8. Once the TPA505x SAA Interface program has been installed, the setup program begins installing Command Tool 6.0. The Command Tool License Agreement must be read and accepted for installation to continue.
9. On acceptance of the Command Tool License Agreement, .Net Framework 1.1 is installed. This installation procedure may take a while. When it is finished, click **ok**.
10. Command Tool 6.0 proceeds to configure the new software. When it is finished, click **Finish**.
11. Power up the TI Input USB Board (see the Operation section in this document), and then connect the USB cable from the computer to the TI Input USB Board. A message pops up stating that the computer has found new hardware. Shortly after that message appears, the computer finds and installs the correct drivers for it.

2.2 Software Use

The TPA5051 software graphical user interface (GUI) is designed to allow the user to control the TPA5051 by an I^2C bus.

1. Select the I^2C address of the EVM by entering the address number under the *I2C Address (0-7)* section. The default for the program is 0. The default for the EVM is also 0. The number in the program corresponds to the last three digits of the I^2C address of the device (ADD2, ADD1, and ADD0), which can be controlled by installing or removing jumpers J5, J4, or J3.
2. Select the mode of operation by clicking on the appropriate circle under *Stream Type*.
3. The right and left delays can be adjusted by turning the knob to the desired number of delay samples, or simply entering the number in the box provided (see Figure 1). The maximum number of delay samples per channel for the TPA5051 is 4095. The TPA505x software, however, allows for programming up to 8191 samples per channel. This is because the software is designed to work for both the TPA5050 and TPA5051. **A delay set above 4095 samples is not valid for the TPA5051.**
4. The right and left delays can be tied together by clicking on the *R Track L 1 OFF/ON* box to the right of the *Right Delay* knob.

5. The delay also can be controlled with the *Frame Delay* option. Simply click on the *Frame Delay Mode 1 ON/OFF* box, and the frame delay options become available. Frame delay mode affects both left and right channels simultaneously (see Figure 2).
6. Clicking on the Right Justified mode under *Stream Type* brings up a hidden window, called *Packet Length*. Through this, the number of packet lengths to be delayed can be entered (see Figure 3).
7. The option Bypass simply sets the TPA5051 to pass the data through, without doing any manipulation to it.
8. The *I2C Status* display at the bottom right indicates whether the device and the computer are communicating properly. A red status bar indicates a problem. A green status bar indicates the device and computer are talking (see Figure 4). Possible solutions to the red status bar problem are to depress and release the **reset** button on the TI Input USB board, check to see that all cables are properly connected, restart the TPA5051 GUI, remove and then re-insert the USB cable into the computer, reboot the computer, or re-install the software.
9. The list of registers on the right side of the screen (0x01…0x10) indicate what values were last written to that particular register. The TPA5051 has eighteen registers, however the two **Complete Update** registers are not shown on the GUI. Therefore, only registers (0x01…0x07) and (0x09…0x0F) are shown.
10. The channel selection tab is designed for use with the TPA5051, which has two independent digital audio inputs. Selecting the *Channel 1* tab allows control of the registers for digital audio input 1 (DATA1 of the device). Selecting the *Channel 2* tab allows control of the registers for digital audio input 2 (DATA2 of the device). See Figure 2

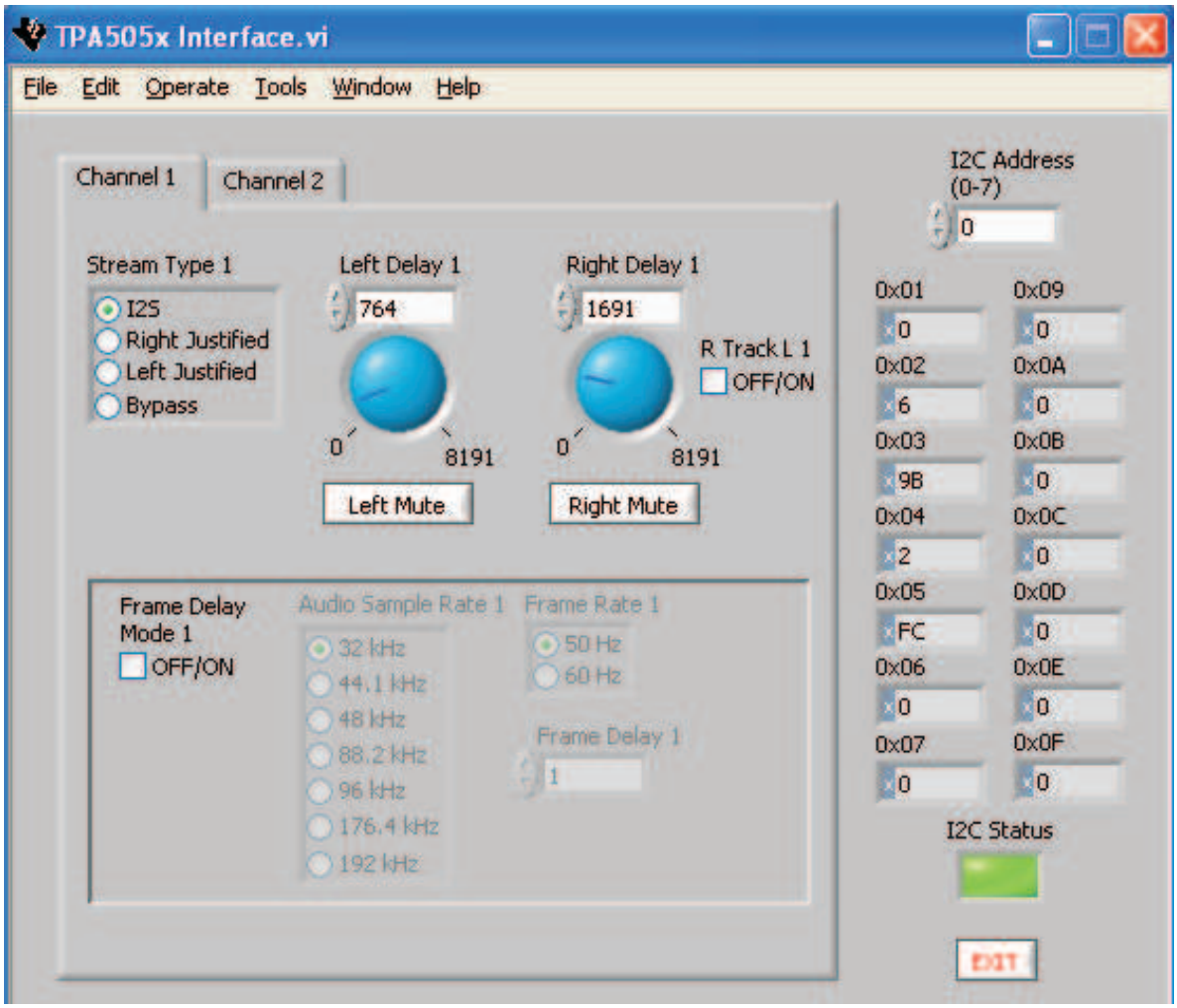

Figure 1. TPA5051 in I²S Mode With Separate Delays for Left and Right Channels

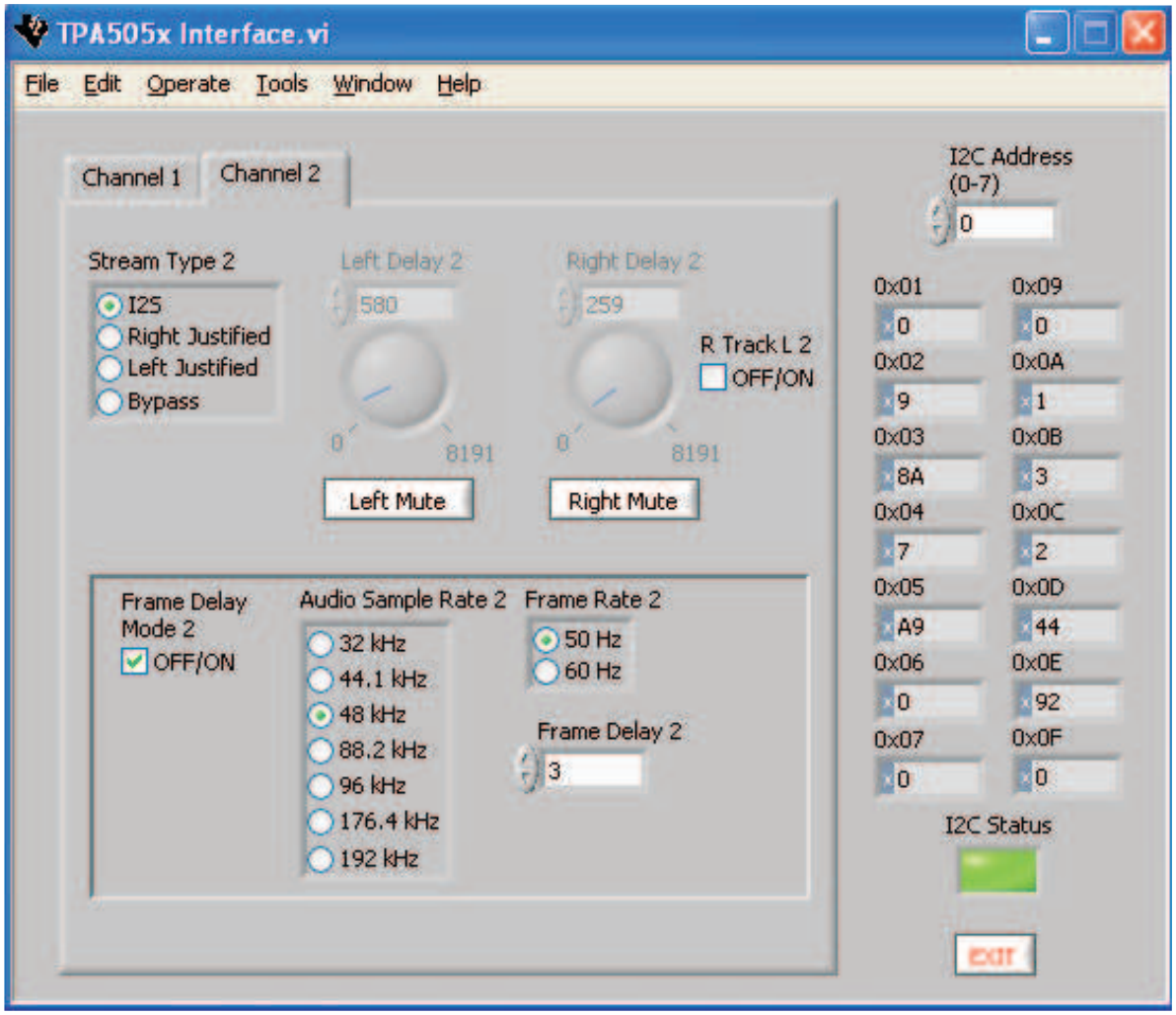

Figure 2. TPA5051 in I²S Mode With Frame Delay

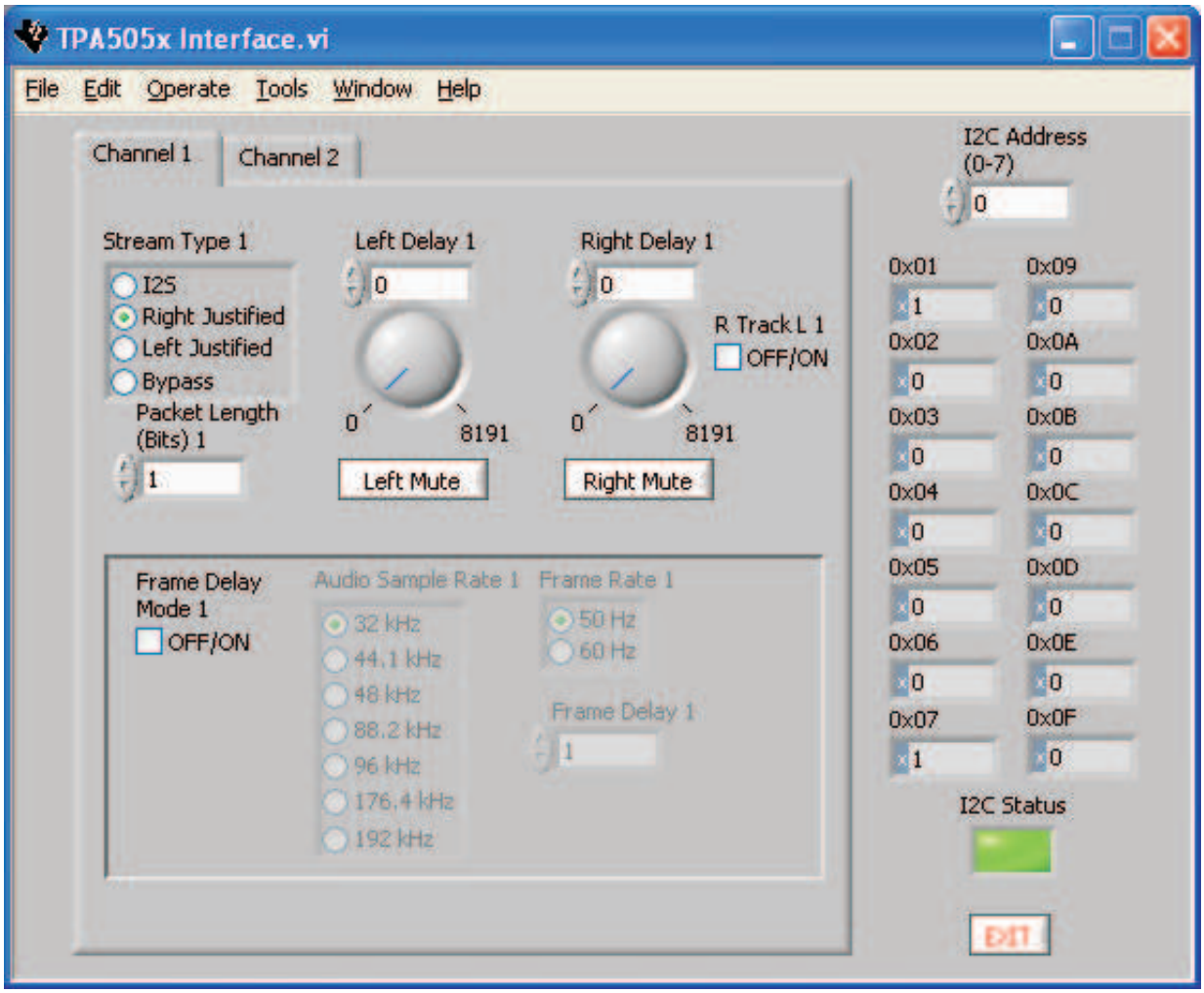

Figure 3. TPA5051 in Right-Justified Mode

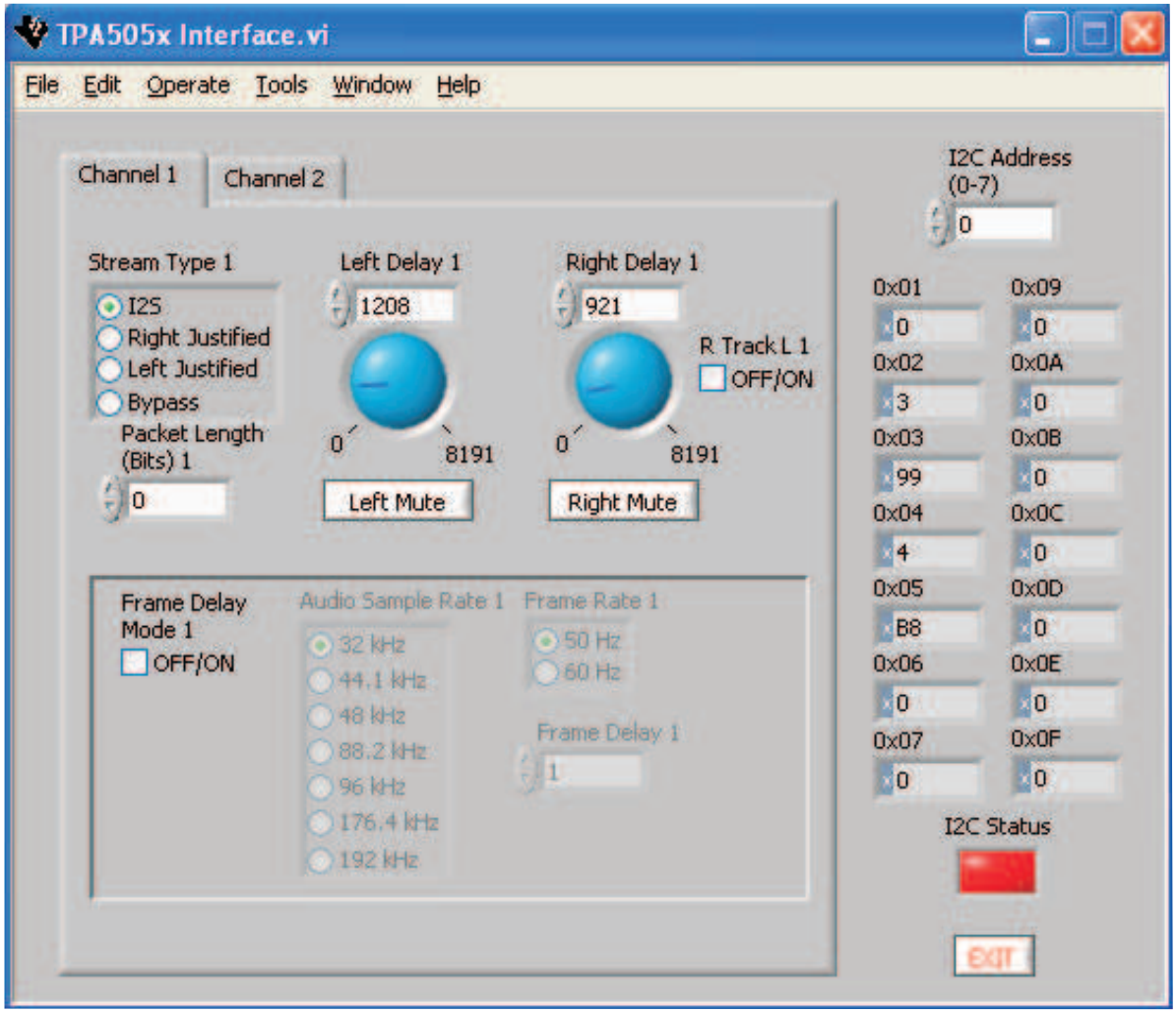

Figure 4. TPA5051 in I²S Mode – Unable to Communicate

3 Operation

3.1 Quick Start List for Use With the TI Input USB Board

Follow these steps to use the TPA5051EVM with the TI Input USB board. This requires a digital or analog audio source, a 5-V power supply, and the included USB and ribbon cables.

3.2 Power Supply

1. Ensure that all external power sources are set to OFF
2. Connect an external regulated power supply set to 5 V to the module +5V (J7) and GND (J6), taking care to observe marked polarity.

3.3 EVM Preparation

1. Ensure that the shunts are fully installed on jumpers **J1** and **J2**. This jumper setting sets the operating mode of the PCM1606 to I^2S.
2. Install the shunts across **J3**, **J4**, or **J5**, to set the I^2C address of the TPA5051. **J3**, **J4**, and **J5** correspond to ADD0, ADD1, and ADD2, respectively. Installing the shunt across a given jumper pulls

that pin high. The default is 000. Installing a shunt across **J3** sets the address to 001.

3. Connect the 34-pin ribbon cable between header J800 on the TI Input USB board and header H1 on the TPA5051EVM.
4. Connect the 16-pin ribbon cable between header J850 on the TI Input USB board and header H3 on the TPA5051EVM.
5. Connect the USB cable from the USB jack on the PC to the J350 USB Interface on the TI Input USB board.
6. For additional delay, another TPA5051EVM can be added in series using the 16-pin and 34-pin ribbon cables.
7. Install shunts across **J6** and **J7**. For stand alone evaluation, the shunts may be removed allowing for separate LRCLK and BCLK signals for DATA1 and DATA2.

Note: No pullup resistors are installed on the TPA5051EVM. Doing so interferes with the initialization of the TI Input USB board in certain circumstances. However, the pads for the pullup resistors, including SDA and SCL (**R13** and **R14**, respectively), are available on the EVM for populating if the EVM is to be used in a stand-alone fashion

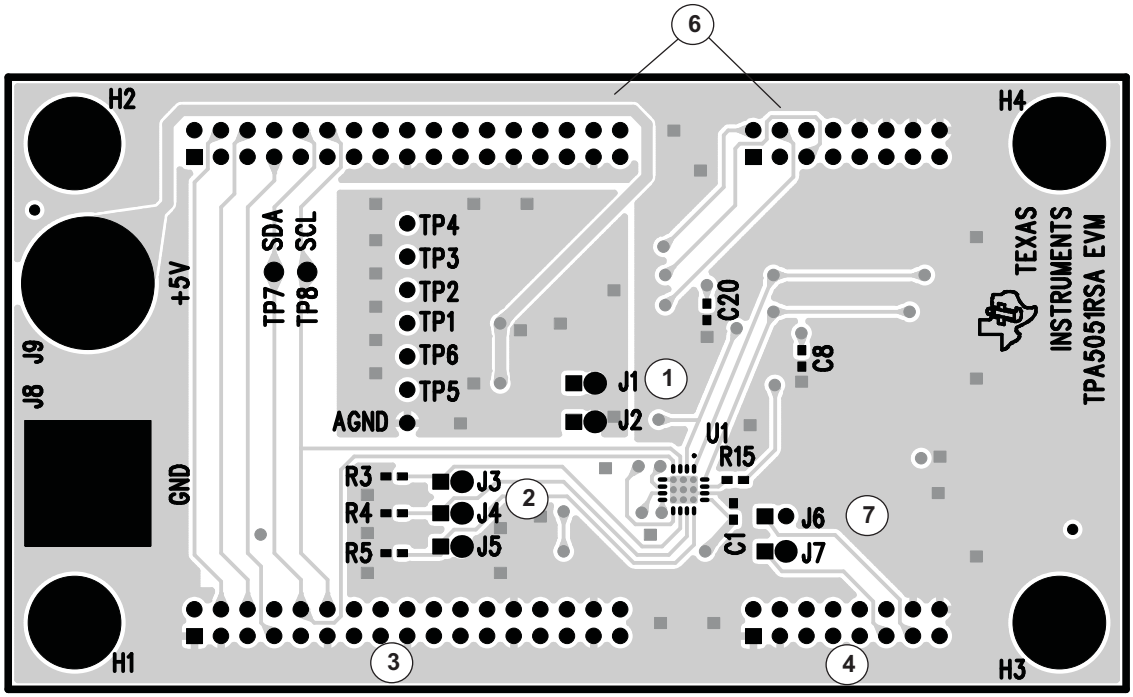

Figure 5. Top Layer of the TPA5051EVM

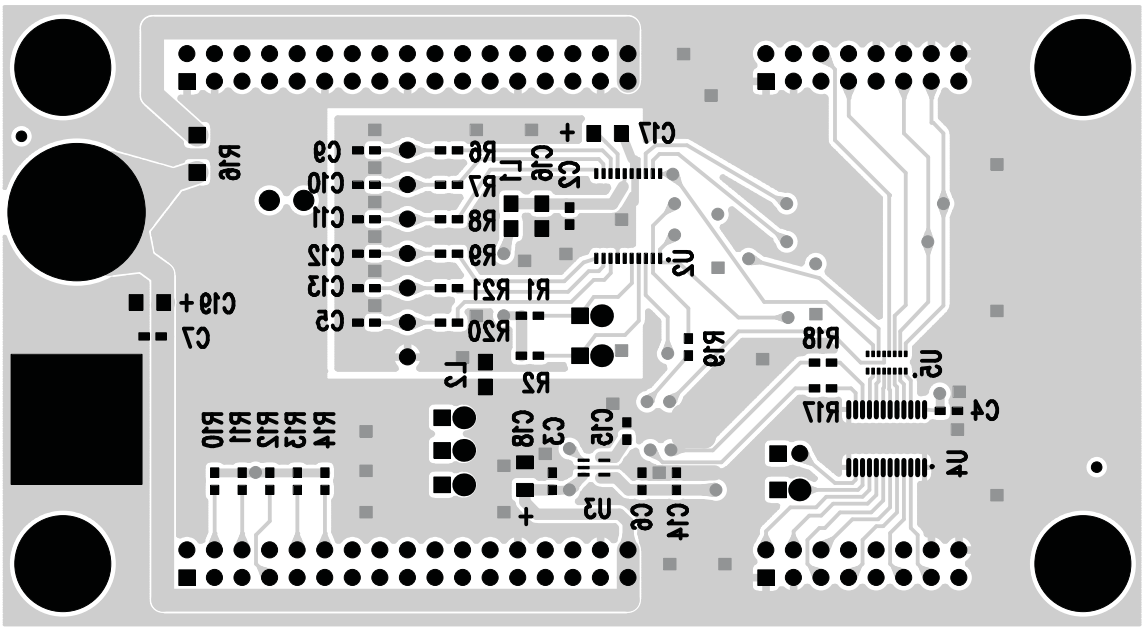

Figure 6. Bottom Layer of the TPA5051EVM

3.4 Operation

1. Turn on the power supply for the TPA5051EVM.
2. Start the TPA505x software.
3. Depress the reset button on the TI Input USB board.
4. To play to music through digital audio input 1 (DATA1), insert a signal source into the TI Input USB board. If it is an analog source, insert it into the jack labeled **CH1+2**.
5. To play to music through digital audio input 2 (DATA2), insert a signal source into the TI Input USB board. If it is an analog source, insert it into the jack labeled **CH3+4**.
6. If the source is digital, insert it into either the RCA jack or the optical jack, and ensure that the switch between them is selected properly.
7. Play the music or other source.
8. Use the GUI to mute the left or right channels, and to delay them.

   Note: The TI Input USB board is designed to output I^2S only.
9. Use scope probes to view both delayed and nondelayed signals via the DAC. TP1 and TP2 (left and right, respectively) are the delayed signals from DATA_OUT1 of the TPA5051. TP3 and TP4 (left and right, respectively) are the original signals input to DATA1. TP5 and TP6 are the delayed signals from DATA_OUT2 of the TPA5051. The EVM is not configured to allow the PCM1606 to display the original signals input to DATA2.
10. External amplifiers can be connected to the output of the PCM1606; however, the supplied AGND test point should be used as the ground reference for external amplifiers. Consult the PCM1606 data sheet for more information regarding this topic.

Note: TP7 and TP8 (SDA and SCL, respectively), are placed for convenient viewing of the I^2C signals only. If it is necessary or desired to manually control the TPA5051 with independent software, the 34 pin connector of the TI Input USB Board must first be removed.

4 Reference

4.1 TPA5051EVM PCB Layers

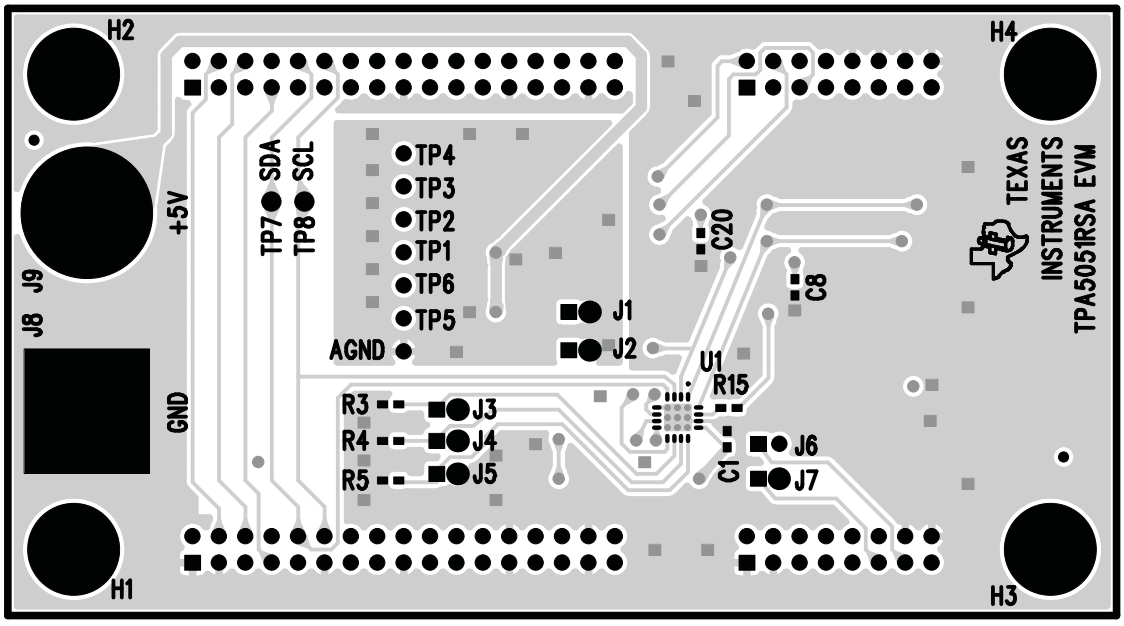

Figure 7. TPA5051EVM Top Layer

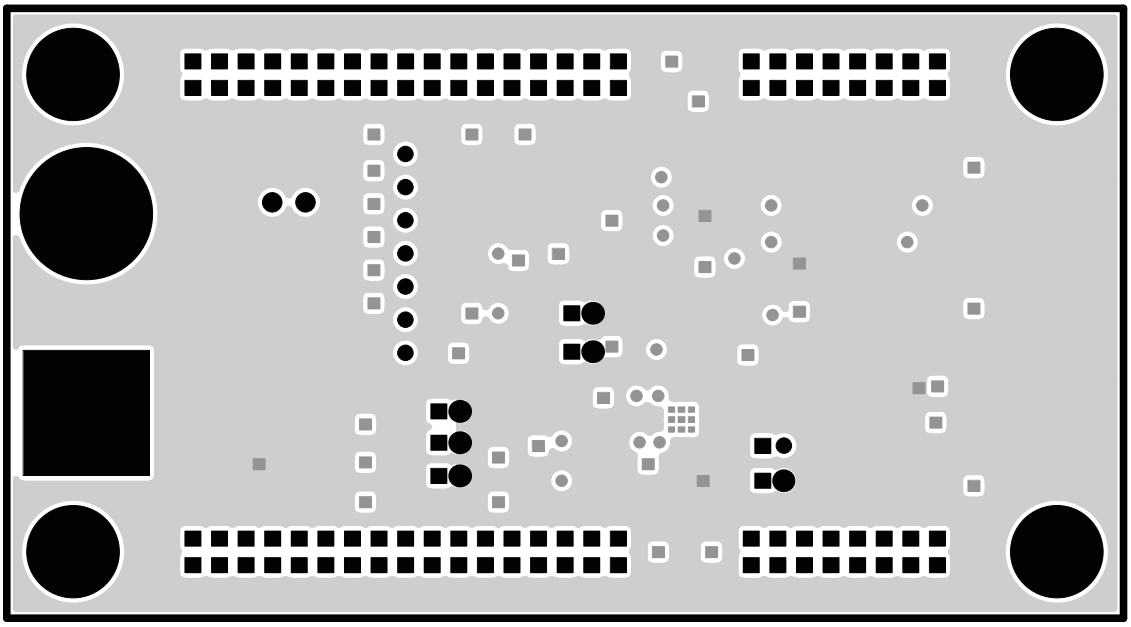

Figure 8. TPA5051EVM Second Layer

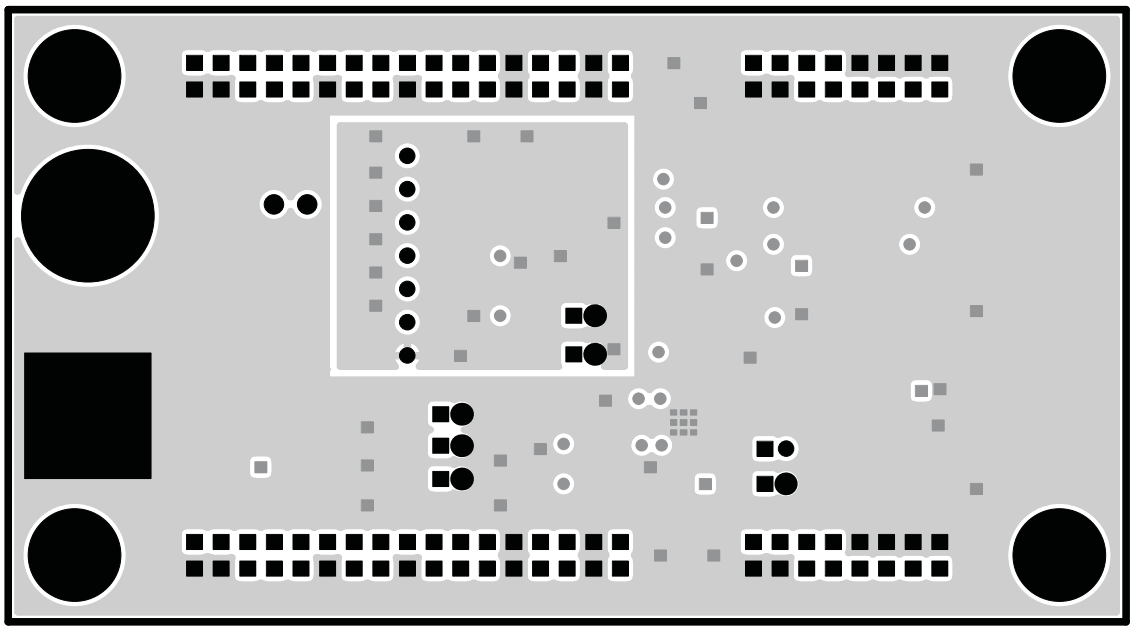

Figure 9. TPA5051EVM Third Layer

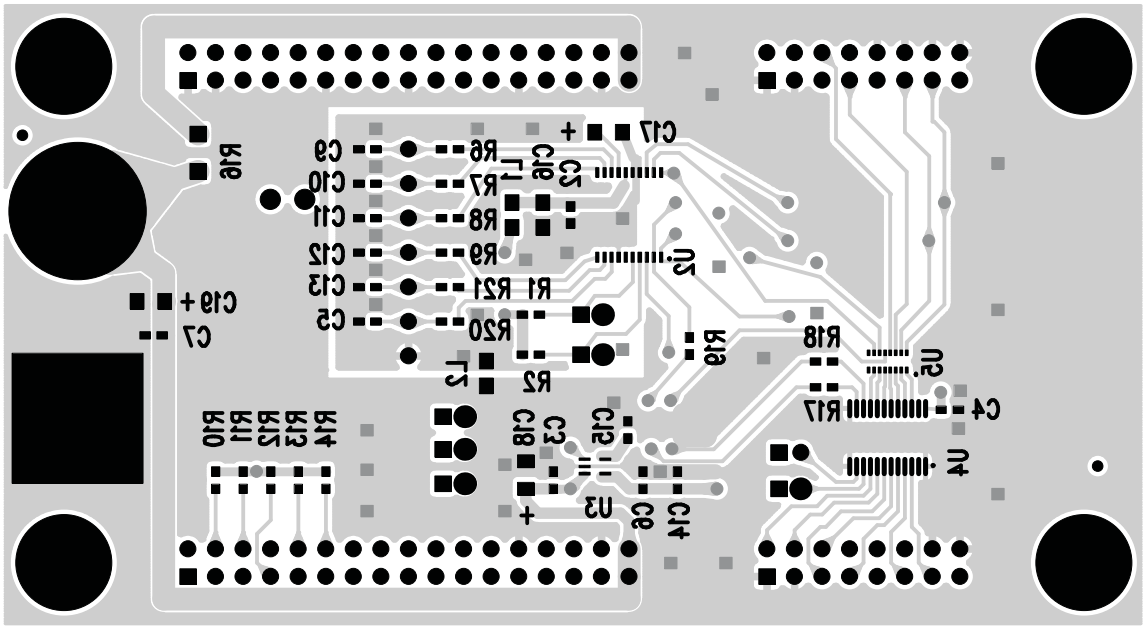

Figure 10. TPA5051EVM Bottom Layer

4.2 TPA5051EVM Bill of Materials

Table 1. Bill of Materials

Part No.	QTY	Value	Description	Distributor No.(1)	Manufacturer Part No.
R1, R2, R3, R4, R5	5	100k	100K, 1/10W, 0603, 5%	P100KGCT-ND	Panasonic ERJ-3GEYJ104V
R6, R7, R8, R9, R20, R21	6	10k	10k, 1/10W, 0603, 5%	P10KGCT-ND	Panasonic ERJ-3GEYJ103V
R10, R11, R12, R13, R14	DNP	2k	2k, 1/10W, 0603, 5%	P2.0KGTR-ND	Panasonic ERJ-3GEYJ202V
R15, R17, R18, R19	4	39	39-Ω, 1/10W, 0603, 1%	311-39.0HRCT-ND	Yageo RC0603FR-0739RL
R16	1	0Ω Jumper	0-Ω, 1/4W, 1206, 5%	P0.0ETR-ND	Panasonic ERJ-8GEY0R00V
C1, C2, C3, C4, C6, C7, C8, C20	8	0.1µF	0.1µF, X7R, ±10%, 10V, Ceramic, 0603	399-1095-1-ND	Kemet C0603C104K8RACTU
C5, C9, C10, C11, C12, C13	6	560pF	560pF, NPO, ±5%, 50V, Ceramic, 0603	PCC2148CT-ND	Panasonic ECJ-1VC1H561J
C14, C15	2	1µF	1µF, X5R, ±10%, 10V, Ceramic, 0603	399-3118-1-ND	Kemet C0603C105K8PACTU
C16	1	1µF	1µF, X5R, ±10%, 16V, Ceramic, 0805	478-1411-2-ND	AVX 0805YD105KAT2A
C17, C18, C19	3	10µF	10µF, Tantalum, ±20%,16V, Size A	399-3105-1-ND	Kemet T494A106M016AS
L1	1	600-Ω Ferrite Bead	600-Ω Ferrite Bead, 0805, 500mA, 200 mΩ DCR	445-1554-2-ND	TDK MMZ2012R601A
L2	1	0-Ω Jumper	0-Ω Jumper, 1/8W, 0805, Ceramic	P0.0ACT-ND	Panasonic ERJ-6GEY0R00V
H1, H2	2	34 Pin Header	34 Pins, 2 Rows, 2,54mm Pitch Vertical Male, Center Slot Polarized		Molex 87834-3411 OR AMP 104338-7
H3, H4	2	16 Pin Header	16 Pins, 2 Rows, 2,54mm Pitch, Vertical Male, Center Slot Polarized		Molex 87834-1611
TP1, TP2, TP3, TP4, TP5, TP6	DNP		Test Points		
TP7, TP8	2	Loop Test Connectors	Test Points		Farnell InOne 8731128 OR Vero 20-2137
J1, J2, J3, J4, J5, J6, J7	7		Jumper, Position, 2mm Header	2163S-36-ND	Norcomp 2163-36-01-P2
J1, J2, J3, J4, J5, J6, J7	7	Shunts	2mm Shunts	SPE1302-ND	Delphi 2JM-G
J8, J9	2		Banana Jack with Knurled Thumbnut	J587	Johnson 111-2223-001
U1	1	TPA5051	Audio Delay, 16 Pin QFN, RSA Designation		Texas Instruments
U2	1	PCM1606	DAC, 20 Pin, SSOP		Texas Instruments
U3	1	TPS73233 OR TPS73633	LDO, 5 pin, SOT-23, DBV designation		Texas Instruments
U4	1	SN74ABT827	10-bit buffer, 24 pin, PW package		Texas Instruments

(1) Distributor is Digikey, unless otherwise specified.

Table 1. Bill of Materials (continued)

Part No.	QTY	Value	Description	Distributor No.(1)	Manufacturer Part No.
U5	1	EXB-2HV390JV	8 Resistor array, 39-Ω, 5%, 1/16W	Y1390TR-ND	Panasonic EXB-2HV390JV

5 TPA5051EVM Schematic Diagram

The TPA5051EVM schematic diagram is appended to this page.

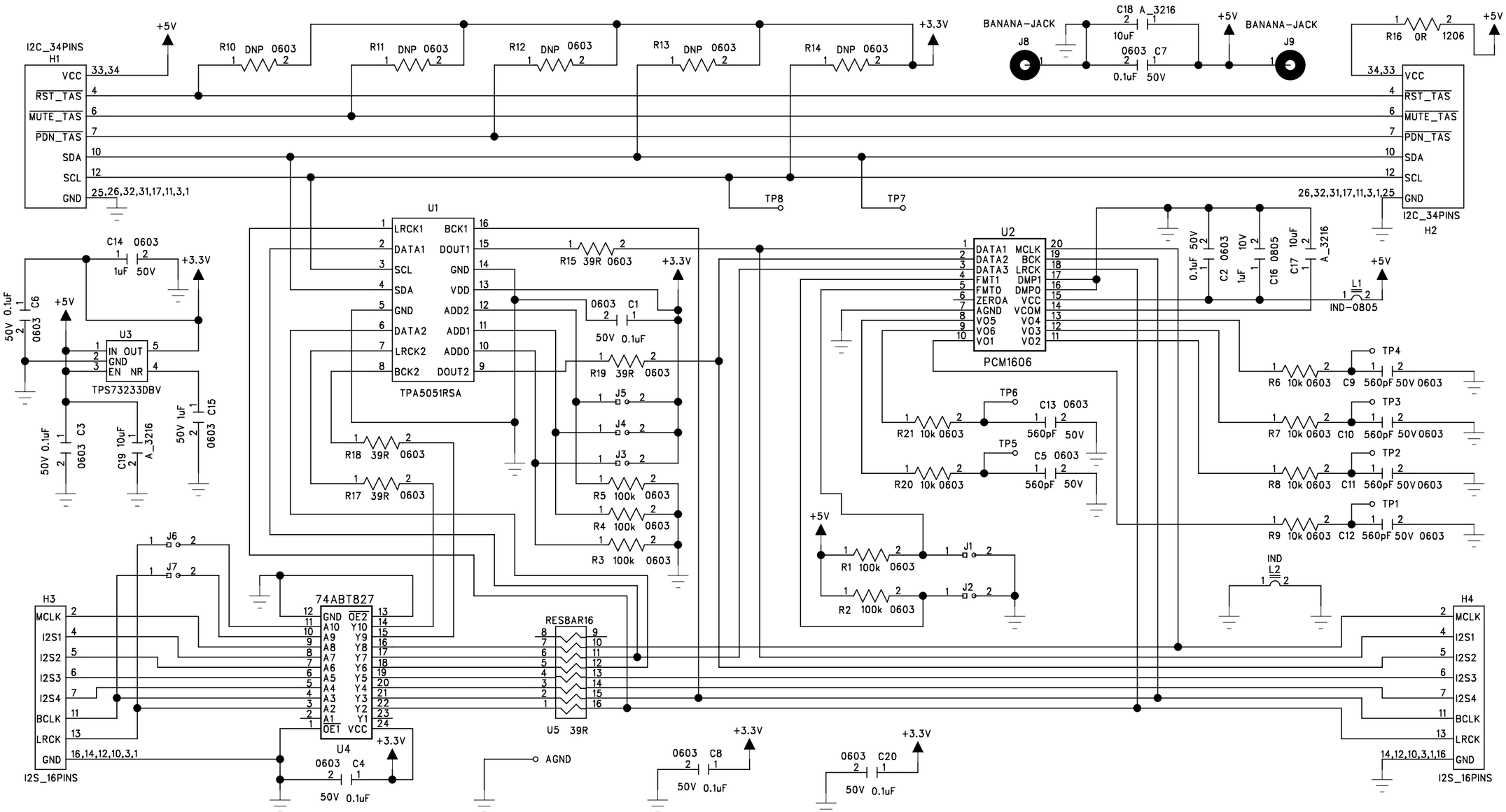
I2C_34PINS
H1
VCC
RST_TAS
MUTE_TAS
PDN_TAS
SDA
SCL
GND
33,34
25,26,32,31,17,11,3,1
+5V
+3.3V
R10 DNP 0603
R11 DNP 0603
R12 DNP 0603
R13 DNP 0603
R14 DNP 0603
BANANA-JACK
J8
J9
C18 A_3216
10uF
0603 C7
0.1uF 50V
R16 0R 1206
34,33
26,32,31,17,11,3,1,25
I2C_34PINS
H2
TP8
TP7
U1
LRCK1
DATA1
SCL
SDA
GND
DATA2
LRCK2
BCK2
BCK1
DOUT1
VDD
ADD2
ADD1
ADD0
DOUT2
TPA5051RSA
R15 39R 0603
0603 C1
50V 0.1uF
R19 39R 0603
R18 39R 0603
R17 39R 0603
J5
J4
J3
R5 100k 0603
R4 100k 0603
R3 100k 0603
U2
DATA1 MCLK
DATA2 BCK
DATA3 LRCK
FMT1 DMP1
FMT0 DMP0
ZEROA VCC
AGND VCOM
VO5 VO4
VO6 VO3
VO1 VO2
PCM1606
0.1uF 50V
C2 0603
1uF 10V
C16 0805
C17 10uF
A_3216
L1
IND-0805
TP4
R6 10k 0603
C9 560pF 50V 0603
TP6
C13 0603
R21 10k 0603
560pF 50V
TP5
C5 0603
R20 10k 0603
560pF 50V
TP3
R7 10k 0603
C10 560pF 50V 0603
TP2
R8 10k 0603
C11 560pF 50V 0603
TP1
R9 10k 0603
C12 560pF 50V 0603
C14 0603
1uF 50V
U3
IN OUT
GND
EN NR
TPS73233DBV
50V 0.1uF
C6 0603
50V 0.1uF
C3 0603
C19 10uF
A_3216
50V 1uF
C15 0603
J6
J7
H3
MCLK
I2S1
I2S2
I2S3
I2S4
BCLK
LRCK
GND
16,14,12,10,3,1
I2S_16PINS
74ABT827
GND OE2
A10 Y10
A9 Y9
A8 Y8
A7 Y7
A6 Y6
A5 Y5
A4 Y4
A3 Y3
A2 Y2
A1 Y1
OE1 VCC
U4
0603 C4
50V 0.1uF
RES8AR16
U5 39R
AGND
0603 C8
50V 0.1uF
0603 C20
50V 0.1uF
+5V
R1 100k 0603
R2 100k 0603
J1
J2
IND
L2
H4
14,12,10,3,1,16
I2S_16PINS

EVALUATION BOARD/KIT IMPORTANT NOTICE

Texas Instruments (TI) provides the enclosed product(s) under the following conditions:

This evaluation board/kit is intended for use for **ENGINEERING DEVELOPMENT, DEMONSTRATION, OR EVALUATION PURPOSES ONLY** and is not considered by TI to be a finished end-product fit for general consumer use. Persons handling the product(s) must have electronics training and observe good engineering practice standards. As such, the goods being provided are not intended to be complete in terms of required design-, marketing-, and/or manufacturing-related protective considerations, including product safety and environmental measures typically found in end products that incorporate such semiconductor components or circuit boards. This evaluation board/kit does not fall within the scope of the European Union directives regarding electromagnetic compatibility, restricted substances (RoHS), recycling (WEEE), FCC, CE or UL, and therefore may not meet the technical requirements of these directives or other related directives.

Should this evaluation board/kit not meet the specifications indicated in the User's Guide, the board/kit may be returned within 30 days from the date of delivery for a full refund. THE FOREGOING WARRANTY IS THE EXCLUSIVE WARRANTY MADE BY SELLER TO BUYER AND IS IN LIEU OF ALL OTHER WARRANTIES, EXPRESSED, IMPLIED, OR STATUTORY, INCLUDING ANY WARRANTY OF MERCHANTABILITY OR FITNESS FOR ANY PARTICULAR PURPOSE.

The user assumes all responsibility and liability for proper and safe handling of the goods. Further, the user indemnifies TI from all claims arising from the handling or use of the goods. Due to the open construction of the product, it is the user's responsibility to take any and all appropriate precautions with regard to electrostatic discharge.

EXCEPT TO THE EXTENT OF THE INDEMNITY SET FORTH ABOVE, NEITHER PARTY SHALL BE LIABLE TO THE OTHER FOR ANY INDIRECT, SPECIAL, INCIDENTAL, OR CONSEQUENTIAL DAMAGES.

TI currently deals with a variety of customers for products, and therefore our arrangement with the user **is not exclusive.**

TI assumes **no liability for applications assistance, customer product design, software performance, or infringement of patents or services described herein.**

Please read the User's Guide and, specifically, the Warnings and Restrictions notice in the User's Guide prior to handling the product. This notice contains important safety information about temperatures and voltages. For additional information on TI's environmental and/or safety programs, please contact the TI application engineer or visit www.ti.com/esh.

No license is granted under any patent right or other intellectual property right of TI covering or relating to any machine, process, or combination in which such TI products or services might be or are used.

FCC Warning

This evaluation board/kit is intended for use for **ENGINEERING DEVELOPMENT, DEMONSTRATION, OR EVALUATION PURPOSES ONLY** and is not considered by TI to be a finished end-product fit for general consumer use. It generates, uses, and can radiate radio frequency energy and has not been tested for compliance with the limits of computing devices pursuant to part 15 of FCC rules, which are designed to provide reasonable protection against radio frequency interference. Operation of this equipment in other environments may cause interference with radio communications, in which case the user at his own expense will be required to take whatever measures may be required to correct this interference.

EVM WARNINGS AND RESTRICTIONS

It is important to operate this EVM within the voltage supply range of 4.5 V to 5.5 V.

Exceeding the specified input range may cause unexpected operation and/or irreversible damage to the EVM. If there are questions concerning the input range, please contact a TI field representative prior to connecting the input power.

Applying loads outside of the specified output range may result in unintended operation and/or possible permanent damage to the EVM. Please consult the EVM User's Guide prior to connecting any load to the EVM output. If there is uncertainty as to the load specification, please contact a TI field representative.

During normal operation, some circuit components may have case temperatures greater than 85°C. The EVM is designed to operate properly with certain components above 85°C as long as the input and output ranges are maintained. These components include but are not limited to linear regulators, switching transistors, pass transistors, and current sense resistors. These types of devices can be identified using the EVM schematic located in the EVM User's Guide. When placing measurement probes near these devices during operation, please be aware that these devices may be very warm to the touch.

Mailing Address: Texas Instruments, Post Office Box 655303, Dallas, Texas 75265
Copyright © 2006, Texas Instruments Incorporated

IMPORTANT NOTICE

Texas Instruments Incorporated and its subsidiaries (TI) reserve the right to make corrections, modifications, enhancements, improvements, and other changes to its products and services at any time and to discontinue any product or service without notice. Customers should obtain the latest relevant information before placing orders and should verify that such information is current and complete. All products are sold subject to TI's terms and conditions of sale supplied at the time of order acknowledgment.

TI warrants performance of its hardware products to the specifications applicable at the time of sale in accordance with TI's standard warranty. Testing and other quality control techniques are used to the extent TI deems necessary to support this warranty. Except where mandated by government requirements, testing of all parameters of each product is not necessarily performed.

TI assumes no liability for applications assistance or customer product design. Customers are responsible for their products and applications using TI components. To minimize the risks associated with customer products and applications, customers should provide adequate design and operating safeguards.

TI does not warrant or represent that any license, either express or implied, is granted under any TI patent right, copyright, mask work right, or other TI intellectual property right relating to any combination, machine, or process in which TI products or services are used. Information published by TI regarding third-party products or services does not constitute a license from TI to use such products or services or a warranty or endorsement thereof. Use of such information may require a license from a third party under the patents or other intellectual property of the third party, or a license from TI under the patents or other intellectual property of TI.

Reproduction of information in TI data books or data sheets is permissible only if reproduction is without alteration and is accompanied by all associated warranties, conditions, limitations, and notices. Reproduction of this information with alteration is an unfair and deceptive business practice. TI is not responsible or liable for such altered documentation.

Resale of TI products or services with statements different from or beyond the parameters stated by TI for that product or service voids all express and any implied warranties for the associated TI product or service and is an unfair and deceptive business practice. TI is not responsible or liable for any such statements.

TI products are not authorized for use in safety-critical applications (such as life support) where a failure of the TI product would reasonably be expected to cause severe personal injury or death, unless officers of the parties have executed an agreement specifically governing such use. Buyers represent that they have all necessary expertise in the safety and regulatory ramifications of their applications, and acknowledge and agree that they are solely responsible for all legal, regulatory and safety-related requirements concerning their products and any use of TI products in such safety-critical applications, notwithstanding any applications-related information or support that may be provided by TI. Further, Buyers must fully indemnify TI and its representatives against any damages arising out of the use of TI products in such safety-critical applications.

TI products are neither designed nor intended for use in military/aerospace applications or environments unless the TI products are specifically designated by TI as military-grade or "enhanced plastic." Only products designated by TI as military-grade meet military specifications. Buyers acknowledge and agree that any such use of TI products which TI has not designated as military-grade is solely at the Buyer's risk, and that they are solely responsible for compliance with all legal and regulatory requirements in connection with such use.

TI products are neither designed nor intended for use in automotive applications or environments unless the specific TI products are designated by TI as compliant with ISO/TS 16949 requirements. Buyers acknowledge and agree that, if they use any non-designated products in automotive applications, TI will not be responsible for any failure to meet such requirements.

Following are URLs where you can obtain information on other Texas Instruments products and application solutions:

Products		**Applications**	
Amplifiers	amplifier.ti.com	Audio	www.ti.com/audio
Data Converters	dataconverter.ti.com	Automotive	www.ti.com/automotive
DSP	dsp.ti.com	Broadband	www.ti.com/broadband
Interface	interface.ti.com	Digital Control	www.ti.com/digitalcontrol
Logic	logic.ti.com	Military	www.ti.com/military
Power Mgmt	power.ti.com	Optical Networking	www.ti.com/opticalnetwork
Microcontrollers	microcontroller.ti.com	Security	www.ti.com/security
RFID	www.ti-rfid.com	Telephony	www.ti.com/telephony
Low Power Wireless	www.ti.com/lpw	Video & Imaging	www.ti.com/video
		Wireless	www.ti.com/wireless

Mailing Address: Texas Instruments, Post Office Box 655303, Dallas, Texas 75265
Copyright © 2007, Texas Instruments Incorporated