TPA3138D2 Evaluation Module

This user's guide describes the operation of the TPA3138D2EVM. The user's guide also provides design information such as PCB layout, bill of materials (BOM), and schematic.

Contents

1 Hardware Overview 2
2 Operation 3
2.1 Electrostatic Discharge Warning 3
2.2 Unpacking the EVM 3
2.3 Power Supply Setup 3
2.4 EVM Preparations 3
2.5 Inputs and Outputs 4
2.6 Power Up 4
2.7 Recommended Setting 4
3 Board Layouts, Bill of Materials, and Schematic 5
3.1 TPA3138D2EVM Board Layouts 5
3.2 Bill of Materials 6
3.3 TPA3138D2EVM Schematic 8

List of Figures

1 TPA3138D2EVM 2
2 TPA3138D2EVM Top Composite Assembly 5
3 TPA3138D2EVM Bottom Composite Assembly 5
4 TPA3138D2EVM Schematic 8

List of Tables

1 TPA3138D2EVM Specification 2
2 Power Requirements 3
3 TPA3138D2EVM Setting 1 4
4 TPA3138D2EVM Setting 2 4
5 TPA3138D2EVM Bill of Materials 6

Trademarks

All trademarks are the property of their respective owners.

Copyright © 2017, Texas Instruments Incorporated

1 Hardware Overview

The TPA3138D2EVM customer evaluation module demonstrates the TPA3138D2integrated circuits from Texas Instruments. The TPA3138D2 is a 10-W (per channel) efficient stereo digital amplifier power stage for driving two bridge-tied speakers.

Figure 1 shows the TPA3138D2EVM.

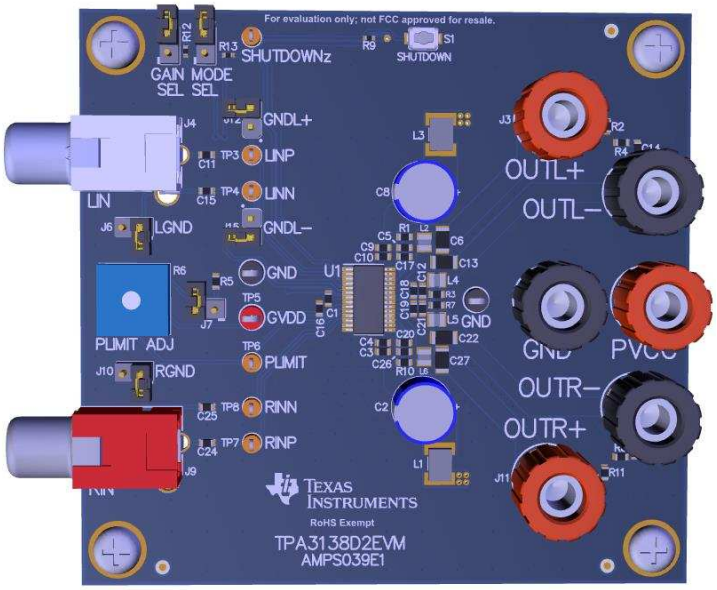

Copyright © 2017, Texas Instruments Incorporated

Figure 1. TPA3138D2EVM

Table 1 lists the TPA3138D2EVM specifications.

Table 1. TPA3138D2EVM Specification

Key Parameters	Value
Power supply voltage	4.5 V to 14.4 V
Number of channels	2 bridge-tied load (BTL) stereo
Load impedance	4 Ω (12 V) to 6 Ω (> 12 V)
Output power BTL	10 W per channel into an 8-Ω load

Copyright © 2017, Texas Instruments Incorporated

2 Operation

This chapter describes the TPA3138D2EVM board in regards to power supply and system interfaces. The chapter provides information about handling and unpacking, absolute operating conditions, and a description of the factory default switch and jumper configuration.

The following sections provide a step-by-step guide to configuring the TPA3138D2EVM for device evaluation.

2.1 Electrostatic Discharge Warning

Many of the components on the TPA3138D2EVM are susceptible to damage by electrostatic discharge (ESD). Customers are advised to observe proper ESD handling precautions when unpacking and handling the EVM, including the use of a grounded wrist strap at an approved ESD workstation.

CAUTION

Failure to observe ESD handling procedures may result in damage to EVM components.

2.2 Unpacking the EVM

When opening the TPA3138D2EVM package, ensure that the following item is included:

- A 1-piece TPA3138D2EVM board using one TPA3138D2

If either of these items is missing, contact the TI Product Information Center nearest you to inquire about a replacement.

2.3 Power Supply Setup

A power supply is required to power up the EVM. Because most of the pins are PVCC compliant, the PVCC supply can also be used to power the analog supply (AVCC) and can be used to pull up the logic pins for shutdown (SD) control, and fault detection (FAULT). Table 2 lists the power requirements.

Table 2. Power Requirements

Description	Voltage Range	Current Requirement	Minimum Wire Size
PVCC	4.5 to 14.4 V	4 A	24 AWG

CAUTION

Applying voltages above the limitations given in Table 2 may cause permanent damage to hardware.

2.4 EVM Preparations

Complete the following steps to prepare the EVM for use:

1. Ensure that the external power source is set to OFF.
2. Connect the external regulated power supply adjusted from 4.5 V to 14.4 V to the module PVCC and GND banana jacks, taking care to observe marked polarity.

Copyright © 2017, Texas Instruments Incorporated

2.5 Inputs and Outputs

Use the following connection instructions for BTL or PBTL configuration:

1. For a BTL configuration, connect loads across the outputs (OUTL+ and OUTL–) and (OUTR+ and OUTR–).
2. For a PBTL configuration, connect a single load from one of the left speaker jacks to one of the right speaker jacks depending on how the filters are loaded. Apply a single input, differential or single-ended, to the RIN RCA phono plug and tie LINP and LINN directly to Ground (without capacitors).

2.6 Power Up

Complete the following steps to power up the EVM board:

1. Select the desired gain and mode of operation through J13 (IN = BTL, OUT = PBTL).
2. Configure the input mode (J6/J10, OUT = differential input mode, IN = single-ended input mode).
3. Verify the correct voltage and input polarity and set the external power supplies to ON. The EVM should begin operation.
4. Adjust the audio source for the correct volume.

2.7 Recommended Setting

Table 3 and Table 4 list recommended settings for conditions with BTL (stereo output) and PBTL (mono output), respectively.

- Single-ended input, auto-recover, without PLIMIT, BTL (stereo output) (see Table 3)
- Single-ended input, auto-recover, PBTL (mono output) (see Table 4)

Table 3. TPA3138D2EVM Setting 1

Setting	Description
J4 (LIN)	L channel audio input
J9 (RIN)	R channel audio input
J6, set to IN	Single-ended input
J10, set to IN	Single-ended input
J7, set to IN	Able to change PLIMIT value with R6
R6	Change PLIMIT voltage value (setting R6 = 0 Ω disables the PLIMIT function)
J12, J15 set to OUT	BTL mode
J14 (MODE SEL) set to OUT	Low idle current mode

Table 4. TPA3138D2EVM Setting 2

Setting	Description
J4 (LIN)	L-channel audio input
J9 (RIN)	R-channel audio input
J6, set to IN	Single-ended input
J10, set to IN	Single-ended input
J7, set to IN	Able to change PLIMIT value with R6
R6	Change PLIMIT voltage value (setting R6 = 0 Ω disables the PLIMIT function)
J12, J15 set to IN	PBTL mode
J14 (MODE SEL) set to OUT	Low idle current mode

Copyright © 2017, Texas Instruments Incorporated

3 Board Layouts, Bill of Materials, and Schematic

3.1 TPA3138D2EVM Board Layouts

Figure 2 and Figure 3 show the board layouts for the EVM.

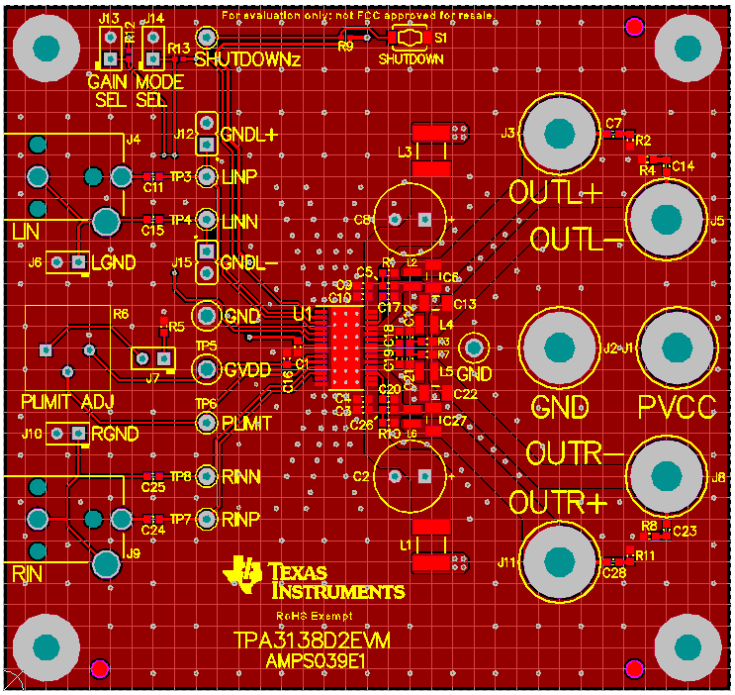

Copyright © 2017, Texas Instruments Incorporated

Figure 2. TPA3138D2EVM Top Composite Assembly

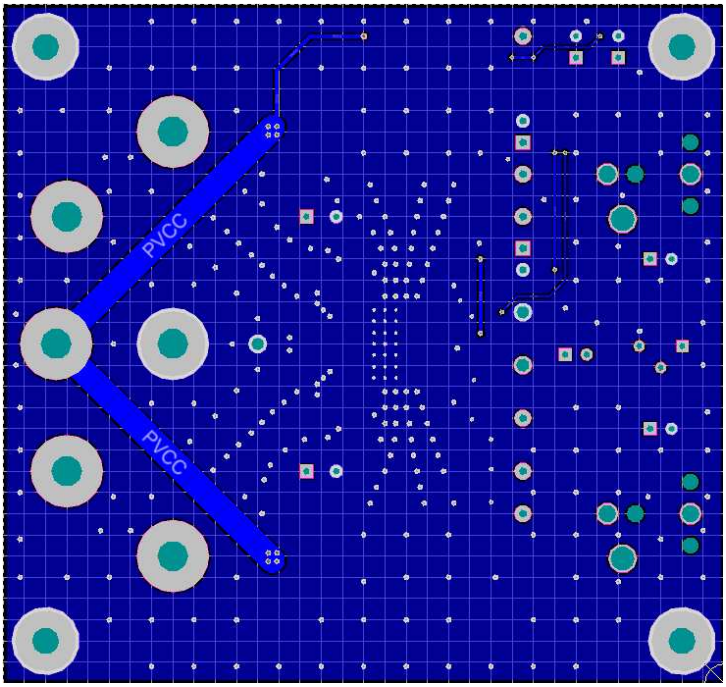

Figure 3. TPA3138D2EVM Bottom Composite Assembly

Copyright © 2017, Texas Instruments Incorporated

3.2 Bill of Materials

Table 5 displays the BOM for this EVM.

Table 5. TPA3138D2EVM Bill of Materials[1]

Designator	Qty	Value	Description	Package Reference	Part Number	Manufacturer	Alternate Part Number	Alternate Manufacturer
!PCB	1		Printed-circuit board		AMPS039	Any		
C1	1	1 µF	CAP, CERM, 1 µF, 35 V, ±10%, X5R, 0603	0603	GMK107BJ105KA-T	Taiyo Yuden		
C2, C8	2	100 µF	CAP, AL, 100 µF, 50 V, ±20%, 0.17 Ω, TH	8.0 × 10.5 mm	UHE1H101MPD	Nichicon		
C3, C9	2	0.1 µF	CAP, CERM, 0.1 µF, 50 V, ±10%, X7R, 0603	0603	GRM188R71H104KA93D	Murata		
C4, C10	2	1000 pF	CAP, CERM, 1000 pF, 50 V, ±5%, C0G/NP0, 0603	0603	GRM1885C1H102JA01D	Murata		
C6, C13, C22, C27	4	1000 pF	CAP, CERM, 1000 pF, 100 V, ±10%, X7R, 1206	1206	12061C102KAT2A	AVX		
C7, C14, C23, C28	4	1000 pF	CAP, CERM, 1000 pF, 50 V, ±10%, C0G/NP0, 0603	0603	06035A102KAT2A	AVX		
C11, C15, C16, C24, C25	5	1 µF	CAP, CERM, 1 uF, 16 V, ±10%, X7R, 0603	0603	GRM188R71C105KA12D	Murata		
C17, C18, C19, C20	4	0.22 µF	CAP, CERM, 0.22 µF, 25 V, ±10%, X7R, 0603	0603	GRM188R71E224KA88D	Murata		
H1, H2, H3, H4	4		Machine Screw, Round, #4-40 × 1/4, Nylon, Philips panhead	Screw	NY PMS 440 0025 PH	B&F Fastener Supply		
H5, H6, H7, H8	4		Standoff, Hex, 0.5"L #4-40 Nylon	Standoff	1902C	Keystone		
J1, J3, J11	3		Binding Post, RED, TH	11.4x27.2mm	7006	Keystone		
J2, J5, J8	3		Binding Post, BLACK, TH	11.4 × 27.2 mm	7007	Keystone		
J4	1		RCA Jack, White, R/A, TH	PC Mount Phono Jack-White, TH	970	Keystone		
J6, J7, J10, J13, J14	5		Header, 100 mil, 2x1, TH	Header, 2x1, 100mil, TH	800-10-002-10-001000	Mill-Max		
J9	1		RCA Jack, Red, R/A, TH	PC Mount Phono Jack-Red, TH	971	Keystone		
J12, J15	2		Header, 100mil, 2x1, Gold, TH	Sullins 100 mil, 1x2, 230 mil above insulator	PBC02SAAN	Sullins Connector Solutions		
L1, L3	2	100 Ω	Ferrite Bead, 100 Ω @ 100-MHz, 8-A, 2-Pin SMD, Body 4.5 × 3.2 mm, Height 2.55 mm	2-Pin SMD, Body 4.5 x 3.2 mm, Height 2.55 mm	HI1812V101R-10	Laird-Signal Integrity Products		
L2, L4, L5, L6	4	300 Ω	Ferrite Bead, 300 Ω @ 100 MHz, 3.1 A, 0806	0806	NFZ2MSM301SN10L	Murata		
R2, R4, R8, R11	4	68.0	RES, 68.0, 1%, 0.1 W, 0603	0603	RC0603FR-0768RL	Yageo America		
R5	1	10.0k	RES, 10.0 k, 1%, 0.1 W, 0603	0603	ERJ-3EKF1002V	Panasonic		
R6	1	100k	TRIMMER, 100 kΩ , 0.5 W, TH	375 × 190 × 375 mil	3386P-1-104LF	Bourns		
R9, R12, R13	3	100k	RES, 100 k, 1%, 0.1 W, 0402	0402	ERJ-2RKF1003X	Panasonic		
S1	1		Switch, Tactile, SPST-NO, 0.05 A, 12 V, SMT	Switch, 4.4 × 2 × 2.9 mm	TL1015AF160QG	E-Switch		

(1) Unless otherwise noted in the *Alternate Part Number* or *Alternate Manufacturer* columns, all parts may be substituted with equivalents.

Copyright © 2017, Texas Instruments Incorporated

Table 5. TPA3138D2EVM Bill of Materials[(1)] (continued)

Designator	Qty	Value	Description	Package Reference	Part Number	Manufacturer	Alternate Part Number	Alternate Manufacturer
SH1, SH2, SH3, SH4, SH5, SH6, SH7	7	1x2	Shunt, 100 mil, Gold plated, Black	Shunt	SNT-100-BK-G	Samtec	969102-0000-DA	3M
TP1, TP2	2	Black	Test Point, Compact, Black, TH	Black Compact Test point	5006	Keystone		
TP3, TP4, TP6, TP7, TP8, TP9	6	Orange	Test Point, Miniature, Orange, TH	Orange Miniature Test point	5003	Keystone		
TP5	1	Red	Test Point, Compact, Red, TH	Red Compact Test point	5005	Keystone		
U1	1		10-W Inductor-Free Stereo (BTL) Class-D Audio Amplifier with Ultra Low EMI, PWP0028H (TSSOP-28)	PWP0028H	TPA3138D2PWPR	Texas Instruments		
C5, C12, C21, C26	0	330 pF	CAP, CERM, 330 pF, 50 V, ±5%, C0G/NP0, 0603	0603	GRM1885C1H331JA01D	Murata		
FID1, FID2, FID3	0		Fiducial mark. There is nothing to buy or mount.	N/A	N/A	N/A		
R1, R3, R7, R10	0	10.0	RES, 10.0, 1%, 0.1 W, 0603	0603	RC0603FR-0710RL	Yageo America		

Copyright © 2017, Texas Instruments Incorporated

3.3 TPA3138D2EVM Schematic

Figure 4 shows the schematic for TPA3138D2EVM.

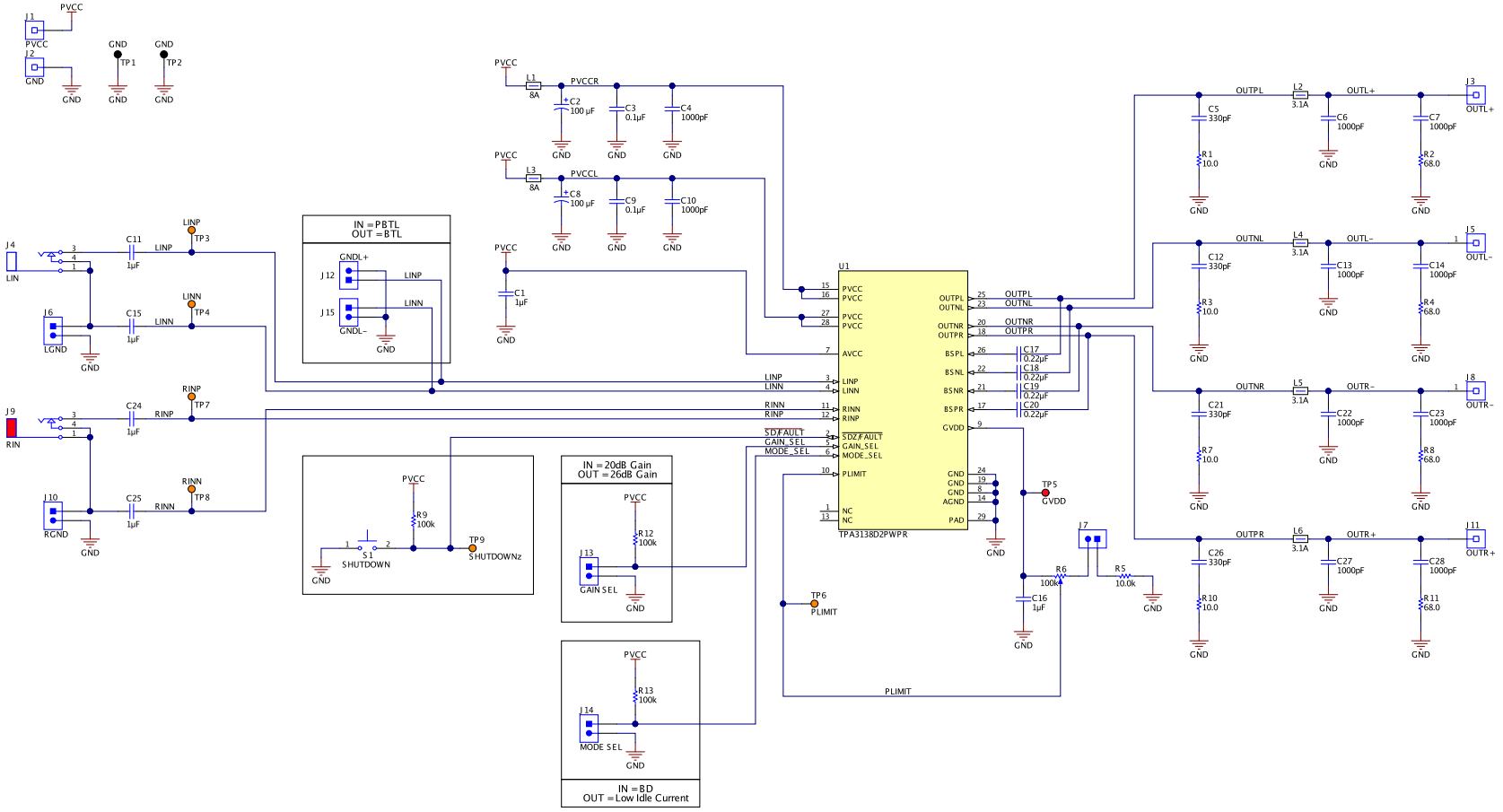

Copyright © 2017, Texas Instruments Incorporated

Figure 4. TPA3138D2EVM Schematic

Copyright © 2017, Texas Instruments Incorporated

STANDARD TERMS FOR EVALUATION MODULES

1. *Delivery:* TI delivers TI evaluation boards, kits, or modules, including any accompanying demonstration software, components, and/or documentation which may be provided together or separately (collectively, an “EVM” or “EVMs”) to the User (“User”) in accordance with the terms set forth herein. User's acceptance of the EVM is expressly subject to the following terms.

   1.1 EVMs are intended solely for product or software developers for use in a research and development setting to facilitate feasibility evaluation, experimentation, or scientific analysis of TI semiconductors products. EVMs have no direct function and are not finished products. EVMs shall not be directly or indirectly assembled as a part or subassembly in any finished product. For clarification, any software or software tools provided with the EVM (“Software”) shall not be subject to the terms and conditions set forth herein but rather shall be subject to the applicable terms that accompany such Software

   1.2 EVMs are not intended for consumer or household use. EVMs may not be sold, sublicensed, leased, rented, loaned, assigned, or otherwise distributed for commercial purposes by Users, in whole or in part, or used in any finished product or production system.

2 *Limited Warranty and Related Remedies/Disclaimers*:

   2.1 These terms do not apply to Software. The warranty, if any, for Software is covered in the applicable Software License Agreement.

   2.2 TI warrants that the TI EVM will conform to TI's published specifications for ninety (90) days after the date TI delivers such EVM to User. Notwithstanding the foregoing, TI shall not be liable for a nonconforming EVM if (a) the nonconformity was caused by neglect, misuse or mistreatment by an entity other than TI, including improper installation or testing, or for any EVMs that have been altered or modified in any way by an entity other than TI, (b) the nonconformity resulted from User's design, specifications or instructions for such EVMs or improper system design, or (c) User has not paid on time. Testing and other quality control techniques are used to the extent TI deems necessary. TI does not test all parameters of each EVM. User's claims against TI under this Section 2 are void if User fails to notify TI of any apparent defects in the EVMs within ten (10) business days after delivery, or of any hidden defects with ten (10) business days after the defect has been detected.

   2.3 TI's sole liability shall be at its option to repair or replace EVMs that fail to conform to the warranty set forth above, or credit User's account for such EVM. TI's liability under this warranty shall be limited to EVMs that are returned during the warranty period to the address designated by TI and that are determined by TI not to conform to such warranty. If TI elects to repair or replace such EVM, TI shall have a reasonable time to repair such EVM or provide replacements. Repaired EVMs shall be warranted for the remainder of the original warranty period. Replaced EVMs shall be warranted for a new full ninety (90) day warranty period.

3 *Regulatory Notices:*

   3.1 *United States*

      3.1.1 *Notice applicable to EVMs not FCC-Approved:*

      FCC NOTICE: This kit is designed to allow product developers to evaluate electronic components, circuitry, or software associated with the kit to determine whether to incorporate such items in a finished product and software developers to write software applications for use with the end product. This kit is not a finished product and when assembled may not be resold or otherwise marketed unless all required FCC equipment authorizations are first obtained. Operation is subject to the condition that this product not cause harmful interference to licensed radio stations and that this product accept harmful interference. Unless the assembled kit is designed to operate under part 15, part 18 or part 95 of this chapter, the operator of the kit must operate under the authority of an FCC license holder or must secure an experimental authorization under part 5 of this chapter.

      3.1.2 *For EVMs annotated as FCC – FEDERAL COMMUNICATIONS COMMISSION Part 15 Compliant:*

      CAUTION

      This device complies with part 15 of the FCC Rules. Operation is subject to the following two conditions: (1) This device may not cause harmful interference, and (2) this device must accept any interference received, including interference that may cause undesired operation.

      Changes or modifications not expressly approved by the party responsible for compliance could void the user's authority to operate the equipment.

      FCC Interference Statement for Class A EVM devices

      NOTE: This equipment has been tested and found to comply with the limits for a Class A digital device, pursuant to part 15 of the FCC Rules. These limits are designed to provide reasonable protection against harmful interference when the equipment is operated in a commercial environment. This equipment generates, uses, and can radiate radio frequency energy and, if not installed and used in accordance with the instruction manual, may cause harmful interference to radio communications. Operation of this equipment in a residential area is likely to cause harmful interference in which case the user will be required to correct the interference at his own expense.

FCC Interference Statement for Class B EVM devices

NOTE: This equipment has been tested and found to comply with the limits for a Class B digital device, pursuant to part 15 of the FCC Rules. These limits are designed to provide reasonable protection against harmful interference in a residential installation. This equipment generates, uses and can radiate radio frequency energy and, if not installed and used in accordance with the instructions, may cause harmful interference to radio communications. However, there is no guarantee that interference will not occur in a particular installation. If this equipment does cause harmful interference to radio or television reception, which can be determined by turning the equipment off and on, the user is encouraged to try to correct the interference by one or more of the following measures:

- *Reorient or relocate the receiving antenna.*
- *Increase the separation between the equipment and receiver.*
- *Connect the equipment into an outlet on a circuit different from that to which the receiver is connected.*
- *Consult the dealer or an experienced radio/TV technician for help.*

3.2 *Canada*

3.2.1 *For EVMs issued with an Industry Canada Certificate of Conformance to RSS-210 or RSS-247*

Concerning EVMs Including Radio Transmitters:

This device complies with Industry Canada license-exempt RSSs. Operation is subject to the following two conditions:

(1) this device may not cause interference, and (2) this device must accept any interference, including interference that may cause undesired operation of the device.

Concernant les EVMs avec appareils radio:

Le présent appareil est conforme aux CNR d'Industrie Canada applicables aux appareils radio exempts de licence. L'exploitation est autorisée aux deux conditions suivantes: (1) l'appareil ne doit pas produire de brouillage, et (2) l'utilisateur de l'appareil doit accepter tout brouillage radioélectrique subi, même si le brouillage est susceptible d'en compromettre le fonctionnement.

Concerning EVMs Including Detachable Antennas:

Under Industry Canada regulations, this radio transmitter may only operate using an antenna of a type and maximum (or lesser) gain approved for the transmitter by Industry Canada. To reduce potential radio interference to other users, the antenna type and its gain should be so chosen that the equivalent isotropically radiated power (e.i.r.p.) is not more than that necessary for successful communication. This radio transmitter has been approved by Industry Canada to operate with the antenna types listed in the user guide with the maximum permissible gain and required antenna impedance for each antenna type indicated. Antenna types not included in this list, having a gain greater than the maximum gain indicated for that type, are strictly prohibited for use with this device.

Concernant les EVMs avec antennes détachables

Conformément à la réglementation d'Industrie Canada, le présent émetteur radio peut fonctionner avec une antenne d'un type et d'un gain maximal (ou inférieur) approuvé pour l'émetteur par Industrie Canada. Dans le but de réduire les risques de brouillage radioélectrique à l'intention des autres utilisateurs, il faut choisir le type d'antenne et son gain de sorte que la puissance isotrope rayonnée équivalente (p.i.r.e.) ne dépasse pas l'intensité nécessaire à l'établissement d'une communication satisfaisante. Le présent émetteur radio a été approuvé par Industrie Canada pour fonctionner avec les types d'antenne énumérés dans le manuel d'usage et ayant un gain admissible maximal et l'impédance requise pour chaque type d'antenne. Les types d'antenne non inclus dans cette liste, ou dont le gain est supérieur au gain maximal indiqué, sont strictement interdits pour l'exploitation de l'émetteur

3.3 *Japan*

3.3.1 *Notice for EVMs delivered in Japan:* Please see http://www.tij.co.jp/lsds/ti_ja/general/eStore/notice_01.page 日本国内に輸入される評価用キット、ボードについては、次のところをご覧ください。
http://www.tij.co.jp/lsds/ti_ja/general/eStore/notice_01.page

3.3.2 *Notice for Users of EVMs Considered "Radio Frequency Products" in Japan:* EVMs entering Japan may not be certified by TI as conforming to Technical Regulations of Radio Law of Japan.

If User uses EVMs in Japan, not certified to Technical Regulations of Radio Law of Japan, User is required to follow the instructions set forth by Radio Law of Japan, which includes, but is not limited to, the instructions below with respect to EVMs (which for the avoidance of doubt are stated strictly for convenience and should be verified by User):

1. Use EVMs in a shielded room or any other test facility as defined in the notification #173 issued by Ministry of Internal Affairs and Communications on March 28, 2006, based on Sub-section 1.1 of Article 6 of the Ministry's Rule for Enforcement of Radio Law of Japan,
2. Use EVMs only after User obtains the license of Test Radio Station as provided in Radio Law of Japan with respect to EVMs, or
3. Use of EVMs only after User obtains the Technical Regulations Conformity Certification as provided in Radio Law of Japan with respect to EVMs. Also, do not transfer EVMs, unless User gives the same notice above to the transferee. Please note that if User does not follow the instructions above, User will be subject to penalties of Radio Law of Japan.

【無線電波を送信する製品の開発キットをお使いになる際の注意事項】 開発キットの中には技術基準適合証明を受けていないものがあります。 技術適合証明を受けていないもののご使用に際しては、電波法遵守のため、以下のいずれかの措置を取っていただく必要がありますのでご注意ください。

1. 電波法施行規則第6条第1項第1号に基づく平成18年3月28日総務省告示第173号で定められた電波暗室等の試験設備でご使用いただく。
2. 実験局の免許を取得後ご使用いただく。
3. 技術基準適合証明を取得後ご使用いただく。

なお、本製品は、上記の「ご使用にあたっての注意」を譲渡先、移転先に通知しない限り、譲渡、移転できないものとします。

上記を遵守頂けない場合は、電波法の罰則が適用される可能性があることをご留意ください。 日本テキサス・インスツルメンツ株式会社

東京都新宿区西新宿６丁目２４番１号

西新宿三井ビル

3.3.3 *Notice for EVMs for Power Line Communication:* Please see http://www.tij.co.jp/lsds/ti_ja/general/eStore/notice_02.page

電力線搬送波通信についての開発キットをお使いになる際の注意事項については、次のところをご覧ください。http://www.tij.co.jp/lsds/ti_ja/general/eStore/notice_02.page

3.4 *European Union*

3.4.1 *For EVMs subject to EU Directive 2014/30/EU (Electromagnetic Compatibility Directive)*:

This is a class A product intended for use in environments other than domestic environments that are connected to a low-voltage power-supply network that supplies buildings used for domestic purposes. In a domestic environment this product may cause radio interference in which case the user may be required to take adequate measures.

4 *EVM Use Restrictions and Warnings:*

4.1 EVMS ARE NOT FOR USE IN FUNCTIONAL SAFETY AND/OR SAFETY CRITICAL EVALUATIONS, INCLUDING BUT NOT LIMITED TO EVALUATIONS OF LIFE SUPPORT APPLICATIONS.

4.2 User must read and apply the user guide and other available documentation provided by TI regarding the EVM prior to handling or using the EVM, including without limitation any warning or restriction notices. The notices contain important safety information related to, for example, temperatures and voltages.

4.3 *Safety-Related Warnings and Restrictions:*

4.3.1 User shall operate the EVM within TI's recommended specifications and environmental considerations stated in the user guide, other available documentation provided by TI, and any other applicable requirements and employ reasonable and customary safeguards. Exceeding the specified performance ratings and specifications (including but not limited to input and output voltage, current, power, and environmental ranges) for the EVM may cause personal injury or death, or property damage. If there are questions concerning performance ratings and specifications, User should contact a TI field representative prior to connecting interface electronics including input power and intended loads. Any loads applied outside of the specified output range may also result in unintended and/or inaccurate operation and/or possible permanent damage to the EVM and/or interface electronics. Please consult the EVM user guide prior to connecting any load to the EVM output. If there is uncertainty as to the load specification, please contact a TI field representative. During normal operation, even with the inputs and outputs kept within the specified allowable ranges, some circuit components may have elevated case temperatures. These components include but are not limited to linear regulators, switching transistors, pass transistors, current sense resistors, and heat sinks, which can be identified using the information in the associated documentation. When working with the EVM, please be aware that the EVM may become very warm.

4.3.2 EVMs are intended solely for use by technically qualified, professional electronics experts who are familiar with the dangers and application risks associated with handling electrical mechanical components, systems, and subsystems. User assumes all responsibility and liability for proper and safe handling and use of the EVM by User or its employees, affiliates, contractors or designees. User assumes all responsibility and liability to ensure that any interfaces (electronic and/or mechanical) between the EVM and any human body are designed with suitable isolation and means to safely limit accessible leakage currents to minimize the risk of electrical shock hazard. User assumes all responsibility and liability for any improper or unsafe handling or use of the EVM by User or its employees, affiliates, contractors or designees.

4.4 User assumes all responsibility and liability to determine whether the EVM is subject to any applicable international, federal, state, or local laws and regulations related to User's handling and use of the EVM and, if applicable, User assumes all responsibility and liability for compliance in all respects with such laws and regulations. User assumes all responsibility and liability for proper disposal and recycling of the EVM consistent with all applicable international, federal, state, and local requirements.

5. *Accuracy of Information:* To the extent TI provides information on the availability and function of EVMs, TI attempts to be as accurate as possible. However, TI does not warrant the accuracy of EVM descriptions, EVM availability or other information on its websites as accurate, complete, reliable, current, or error-free.

6. *Disclaimers:*

   6.1 EXCEPT AS SET FORTH ABOVE, EVMS AND ANY MATERIALS PROVIDED WITH THE EVM (INCLUDING, BUT NOT LIMITED TO, REFERENCE DESIGNS AND THE DESIGN OF THE EVM ITSELF) ARE PROVIDED "AS IS" AND "WITH ALL FAULTS." TI DISCLAIMS ALL OTHER WARRANTIES, EXPRESS OR IMPLIED, REGARDING SUCH ITEMS, INCLUDING BUT NOT LIMITED TO ANY EPIDEMIC FAILURE WARRANTY OR IMPLIED WARRANTIES OF MERCHANTABILITY OR FITNESS FOR A PARTICULAR PURPOSE OR NON-INFRINGEMENT OF ANY THIRD PARTY PATENTS, COPYRIGHTS, TRADE SECRETS OR OTHER INTELLECTUAL PROPERTY RIGHTS.

   6.2 EXCEPT FOR THE LIMITED RIGHT TO USE THE EVM SET FORTH HEREIN, NOTHING IN THESE TERMS SHALL BE CONSTRUED AS GRANTING OR CONFERRING ANY RIGHTS BY LICENSE, PATENT, OR ANY OTHER INDUSTRIAL OR INTELLECTUAL PROPERTY RIGHT OF TI, ITS SUPPLIERS/LICENSORS OR ANY OTHER THIRD PARTY, TO USE THE EVM IN ANY FINISHED END-USER OR READY-TO-USE FINAL PRODUCT, OR FOR ANY INVENTION, DISCOVERY OR IMPROVEMENT, REGARDLESS OF WHEN MADE, CONCEIVED OR ACQUIRED.

7. *USER'S INDEMNITY OBLIGATIONS AND REPRESENTATIONS.* USER WILL DEFEND, INDEMNIFY AND HOLD TI, ITS LICENSORS AND THEIR REPRESENTATIVES HARMLESS FROM AND AGAINST ANY AND ALL CLAIMS, DAMAGES, LOSSES, EXPENSES, COSTS AND LIABILITIES (COLLECTIVELY, "CLAIMS") ARISING OUT OF OR IN CONNECTION WITH ANY HANDLING OR USE OF THE EVM THAT IS NOT IN ACCORDANCE WITH THESE TERMS. THIS OBLIGATION SHALL APPLY WHETHER CLAIMS ARISE UNDER STATUTE, REGULATION, OR THE LAW OF TORT, CONTRACT OR ANY OTHER LEGAL THEORY, AND EVEN IF THE EVM FAILS TO PERFORM AS DESCRIBED OR EXPECTED.

8. *Limitations on Damages and Liability:*

   8.1 *General Limitations*. IN NO EVENT SHALL TI BE LIABLE FOR ANY SPECIAL, COLLATERAL, INDIRECT, PUNITIVE, INCIDENTAL, CONSEQUENTIAL, OR EXEMPLARY DAMAGES IN CONNECTION WITH OR ARISING OUT OF THESE TERMS OR THE USE OF THE EVMS , REGARDLESS OF WHETHER TI HAS BEEN ADVISED OF THE POSSIBILITY OF SUCH DAMAGES. EXCLUDED DAMAGES INCLUDE, BUT ARE NOT LIMITED TO, COST OF REMOVAL OR REINSTALLATION, ANCILLARY COSTS TO THE PROCUREMENT OF SUBSTITUTE GOODS OR SERVICES, RETESTING, OUTSIDE COMPUTER TIME, LABOR COSTS, LOSS OF GOODWILL, LOSS OF PROFITS, LOSS OF SAVINGS, LOSS OF USE, LOSS OF DATA, OR BUSINESS INTERRUPTION. NO CLAIM, SUIT OR ACTION SHALL BE BROUGHT AGAINST TI MORE THAN TWELVE (12) MONTHS AFTER THE EVENT THAT GAVE RISE TO THE CAUSE OF ACTION HAS OCCURRED.

   8.2 *Specific Limitations.* IN NO EVENT SHALL TI'S AGGREGATE LIABILITY FROM ANY USE OF AN EVM PROVIDED HEREUNDER, INCLUDING FROM ANY WARRANTY, INDEMITY OR OTHER OBLIGATION ARISING OUT OF OR IN CONNECTION WITH THESE TERMS, , EXCEED THE TOTAL AMOUNT PAID TO TI BY USER FOR THE PARTICULAR EVM(S) AT ISSUE DURING THE PRIOR TWELVE (12) MONTHS WITH RESPECT TO WHICH LOSSES OR DAMAGES ARE CLAIMED. THE EXISTENCE OF MORE THAN ONE CLAIM SHALL NOT ENLARGE OR EXTEND THIS LIMIT.

9. *Return Policy.* Except as otherwise provided, TI does not offer any refunds, returns, or exchanges. Furthermore, no return of EVM(s) will be accepted if the package has been opened and no return of the EVM(s) will be accepted if they are damaged or otherwise not in a resalable condition. If User feels it has been incorrectly charged for the EVM(s) it ordered or that delivery violates the applicable order, User should contact TI. All refunds will be made in full within thirty (30) working days from the return of the components(s), excluding any postage or packaging costs.

10. *Governing Law:* These terms and conditions shall be governed by and interpreted in accordance with the laws of the State of Texas, without reference to conflict-of-laws principles. User agrees that non-exclusive jurisdiction for any dispute arising out of or relating to these terms and conditions lies within courts located in the State of Texas and consents to venue in Dallas County, Texas. Notwithstanding the foregoing, any judgment may be enforced in any United States or foreign court, and TI may seek injunctive relief in any United States or foreign court.

Mailing Address: Texas Instruments, Post Office Box 655303, Dallas, Texas 75265
Copyright © 2017, Texas Instruments Incorporated

IMPORTANT NOTICE FOR TI DESIGN INFORMATION AND RESOURCES

Texas Instruments Incorporated ('TI") technical, application or other design advice, services or information, including, but not limited to, reference designs and materials relating to evaluation modules, (collectively, "TI Resources") are intended to assist designers who are developing applications that incorporate TI products; by downloading, accessing or using any particular TI Resource in any way, you (individually or, if you are acting on behalf of a company, your company) agree to use it solely for this purpose and subject to the terms of this Notice.

TI's provision of TI Resources does not expand or otherwise alter TI's applicable published warranties or warranty disclaimers for TI products, and no additional obligations or liabilities arise from TI providing such TI Resources. TI reserves the right to make corrections, enhancements, improvements and other changes to its TI Resources.

You understand and agree that you remain responsible for using your independent analysis, evaluation and judgment in designing your applications and that you have full and exclusive responsibility to assure the safety of your applications and compliance of your applications (and of all TI products used in or for your applications) with all applicable regulations, laws and other applicable requirements. You represent that, with respect to your applications, you have all the necessary expertise to create and implement safeguards that (1) anticipate dangerous consequences of failures, (2) monitor failures and their consequences, and (3) lessen the likelihood of failures that might cause harm and take appropriate actions. You agree that prior to using or distributing any applications that include TI products, you will thoroughly test such applications and the functionality of such TI products as used in such applications. TI has not conducted any testing other than that specifically described in the published documentation for a particular TI Resource.

You are authorized to use, copy and modify any individual TI Resource only in connection with the development of applications that include the TI product(s) identified in such TI Resource. NO OTHER LICENSE, EXPRESS OR IMPLIED, BY ESTOPPEL OR OTHERWISE TO ANY OTHER TI INTELLECTUAL PROPERTY RIGHT, AND NO LICENSE TO ANY TECHNOLOGY OR INTELLECTUAL PROPERTY RIGHT OF TI OR ANY THIRD PARTY IS GRANTED HEREIN, including but not limited to any patent right, copyright, mask work right, or other intellectual property right relating to any combination, machine, or process in which TI products or services are used. Information regarding or referencing third-party products or services does not constitute a license to use such products or services, or a warranty or endorsement thereof. Use of TI Resources may require a license from a third party under the patents or other intellectual property of the third party, or a license from TI under the patents or other intellectual property of TI.

TI RESOURCES ARE PROVIDED "AS IS" AND WITH ALL FAULTS. TI DISCLAIMS ALL OTHER WARRANTIES OR REPRESENTATIONS, EXPRESS OR IMPLIED, REGARDING TI RESOURCES OR USE THEREOF, INCLUDING BUT NOT LIMITED TO ACCURACY OR COMPLETENESS, TITLE, ANY EPIDEMIC FAILURE WARRANTY AND ANY IMPLIED WARRANTIES OF MERCHANTABILITY, FITNESS FOR A PARTICULAR PURPOSE, AND NON-INFRINGEMENT OF ANY THIRD PARTY INTELLECTUAL PROPERTY RIGHTS.

TI SHALL NOT BE LIABLE FOR AND SHALL NOT DEFEND OR INDEMNIFY YOU AGAINST ANY CLAIM, INCLUDING BUT NOT LIMITED TO ANY INFRINGEMENT CLAIM THAT RELATES TO OR IS BASED ON ANY COMBINATION OF PRODUCTS EVEN IF DESCRIBED IN TI RESOURCES OR OTHERWISE. IN NO EVENT SHALL TI BE LIABLE FOR ANY ACTUAL, DIRECT, SPECIAL, COLLATERAL, INDIRECT, PUNITIVE, INCIDENTAL, CONSEQUENTIAL OR EXEMPLARY DAMAGES IN CONNECTION WITH OR ARISING OUT OF TI RESOURCES OR USE THEREOF, AND REGARDLESS OF WHETHER TI HAS BEEN ADVISED OF THE POSSIBILITY OF SUCH DAMAGES.

You agree to fully indemnify TI and its representatives against any damages, costs, losses, and/or liabilities arising out of your non-compliance with the terms and provisions of this Notice.

This Notice applies to TI Resources. Additional terms apply to the use and purchase of certain types of materials, TI products and services. These include; without limitation, TI's standard terms for semiconductor products http://www.ti.com/sc/docs/stdterms.htm), evaluation modules, and samples (http://www.ti.com/sc/docs/sampterms.htm).

Mailing Address: Texas Instruments, Post Office Box 655303, Dallas, Texas 75265
Copyright © 2017, Texas Instruments Incorporated