TPA3124D2 Audio Power Amplifier Evaluation Module

Contents

1 Introduction 1
1.1 Description 1
1.2 TPA3124D2EVM Specifications 3
2 Operation 3
2.1 Quick Start List for Stand-Alone Operation 3
3 Reference 4
3.1 TPA3124D2EVM Schematic 4
3.2 TPA3124D2EVM PCB Layers 5
3.3 TPA3124D2EVM Bill of Materials 7

List of Figures

1 TPA3124D2 Audio Power Amplifier EVM – Top View 2
2 TPA3124D2 Audio Power Amplifier EVM – Bottom View 2
3 TPA3124D2EVM Schematic 4
4 TPA3124D2EVM – Top-Side Layout 5
5 TPA3124D2EVM – Bottom-Side Layout 6

List of Tables

1 Gain Settings 3

1 Introduction

1.1 Description

The TPA3124D2 evaluation module (EVM) consists of a single 15-W, class-D, stereo audio power amplifier complete with a small number of external components mounted on a printed-circuit board that can be used to directly drive speakers with an external analog audio source as the input.

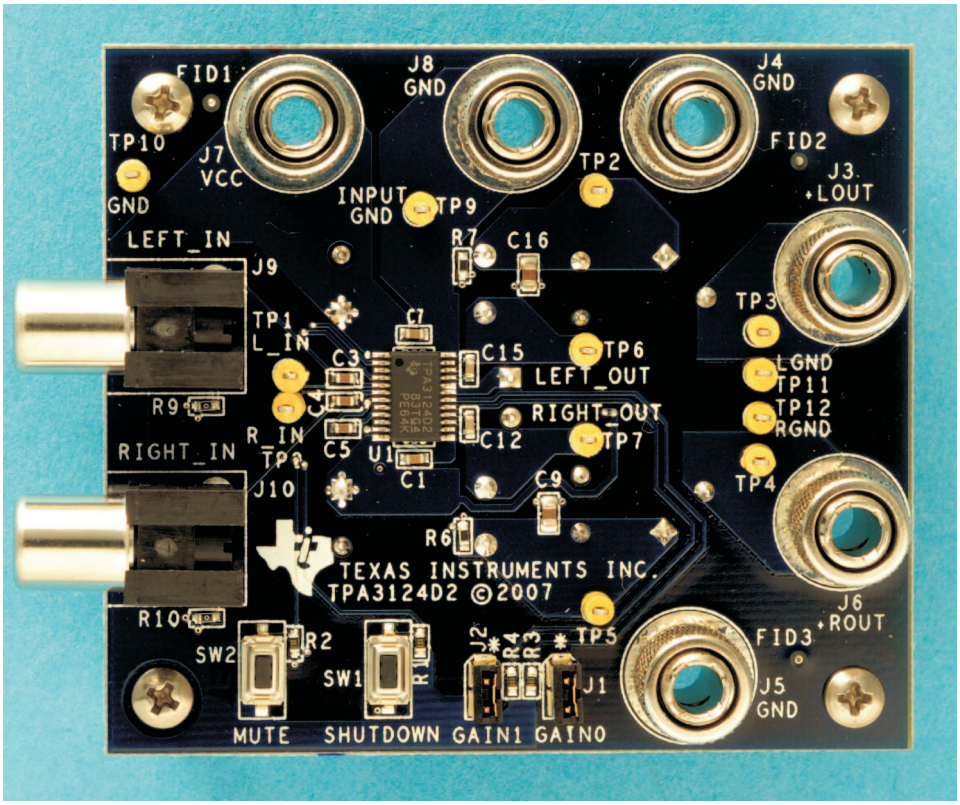

Figure 1. TPA3124D2 Audio Power Amplifier EVM – Top View

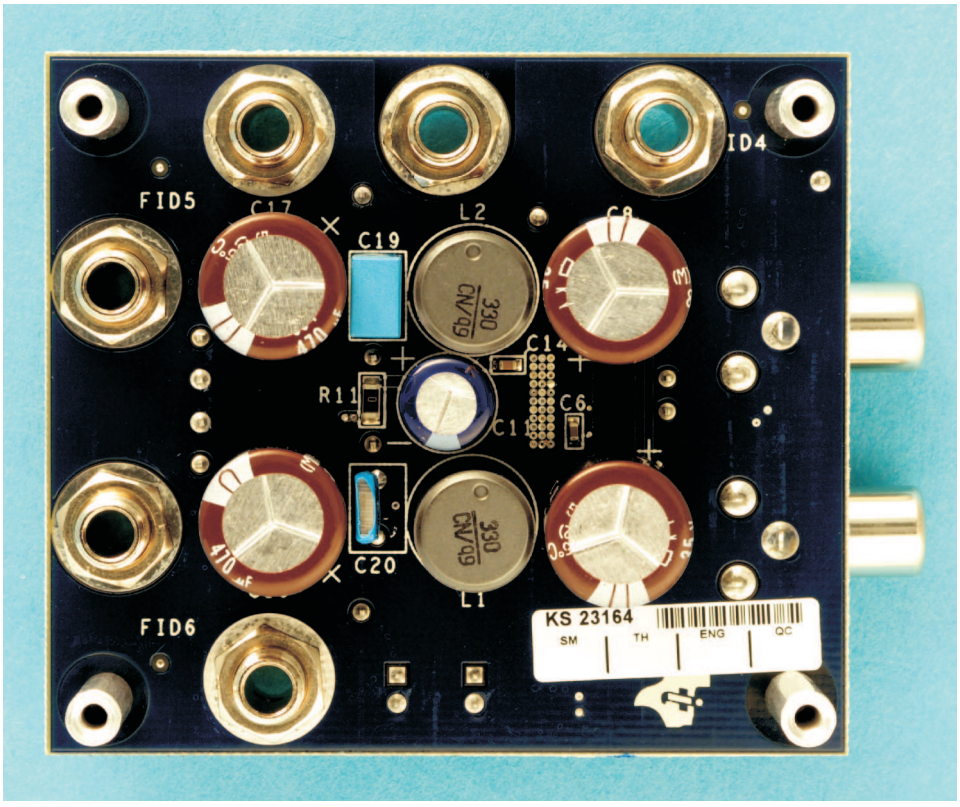

Figure 2. TPA3124D2 Audio Power Amplifier EVM – Bottom View

1.2 TPA3124D2EVM Specifications

V_{CC}	Supply voltage range	10 V to 26 V
I_{CC}	Supply current	3 A max
P_O	Continuous output power per channel: 8 Ω, VCC = 24 V, THD+N = 10%	10 W
R_L	Minimum load impedance	4 Ω

2 Operation

2.1 Quick Start List for Stand-Alone Operation

Follow these steps to use the TPA3124D2EVM stand-alone or when connecting it into existing circuits or equipment. Connections to the EVM can be made by inserting stripped wire or using banana plugs for the power supply and output connections. The inputs accept standard RCA plugs.

2.1.1 Power Supply

1. Ensure that all external power sources are set to OFF.
2. Connect an external regulated power supply adjusted from 10 V to 26 V to the module VCC (J7) and GND (J8) banana jacks taking care to observe marked polarity.

2.1.2 Evaluation Module Preparations

Inputs and Outputs

1. Connect a speaker across GND (**J5**) and +ROUT (**J6**). Connect another speaker across LOUT (**J3**) and GND (**J4**).
2. Install both gain jumpers GAIN0 (**J1**) and GAIN1 (**J2**). This sets the gain of the amplifier to the lowest level, 20 dB.
3. Connect an analog audio source to Left In (J**9**) and Right In (**J10**) using RCA phono plugs.

Control Inputs

1. **$\overline{\text{SHUTDOWN}}$**: This terminal is active LOW. A LOW on the device terminal (<0.8 V) shuts down the amplifier; a HIGH (>2 V) on the device terminal places the amplifier in the active state. Holding down switch **SW1** places the amplifier in the SHUTDOWN state. Releasing **SW1** returns the amplifier to the active state. This terminal is Vcc compliant.
2. **MUTE**: This terminal is active HIGH. A HIGH (>2 V) on this terminal immediately terminates audio playback through the speakers; a LOW (<0.8 V) enable the devices. The outputs remain switching with 50% duty cycle. **SW2** on the EVM controls the state of the MUTE terminal. Holding down switch **SW2** places the amplifier in the MUTE state. Releasing **SW2** returns the amplifier to the active state. This terminal is Vcc compliant.
3. **GAIN0/GAIN1**: Together, these terminals determine the gain of the amplifier (see Table 1). Installing a jumper in **J1** or **J2** sets the respective terminal to GND. Removing the jumper sets the respective terminals to VCC. Removing the jumpers increase the gain whereas installing jumpers decreases the gain. Logic levels are TTL compatible. These terminals are Vcc compliant

Table 1. Gain Settings

GAIN0 (J1)	GAIN1 (J2)	Amplifier Gain (dB)
ON	ON	20
ON	OFF	26
OFF	ON	32
OFF	OFF	36

2.1.3 Power Up

1. Verify correct voltage and input polarity, and turn the external power supplies ON. The EVM begins operation
2. Adjust the input signal.
3. Adjust the control inputs to the desired settings.
4. Adjust the amplifier gain by installing/removing the gain jumpers, **J1** and **J2**.

3 Reference

3.1 TPA3124D2EVM Schematic

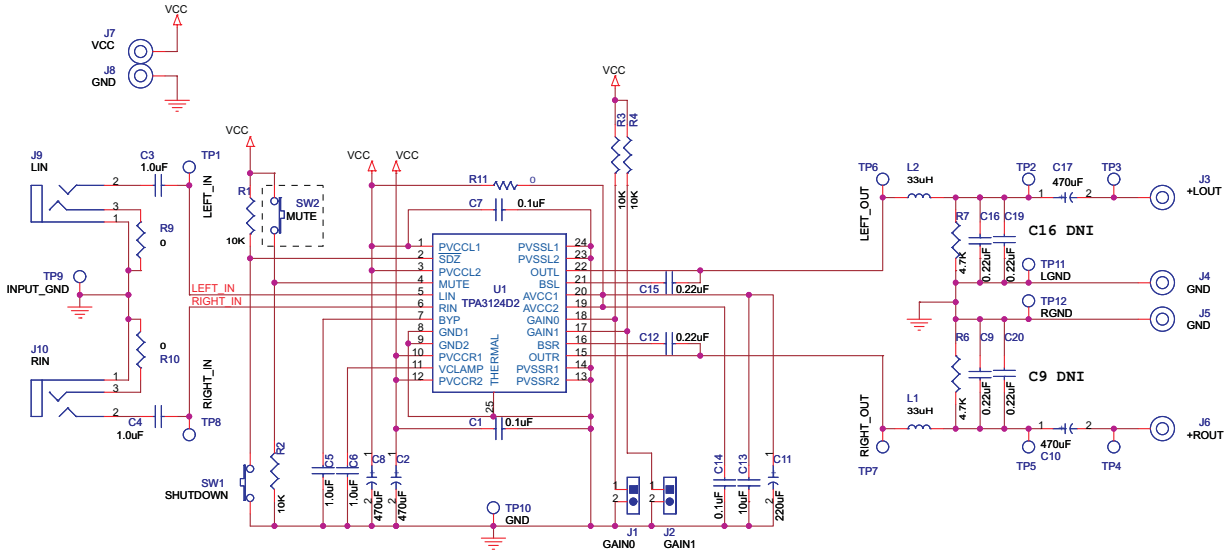

Figure 3. TPA3124D2EVM Schematic

3.2 TPA3124D2EVM PCB Layers

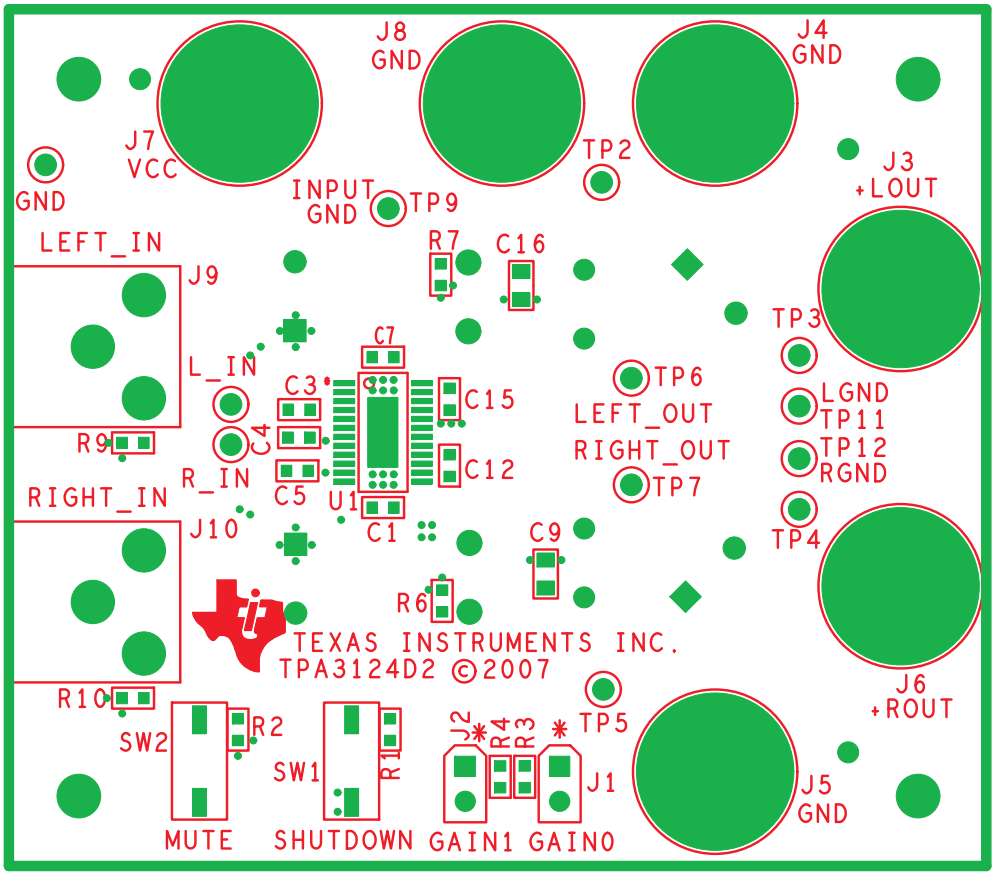

Figure 4. TPA3124D2EVM – Top-Side Layout

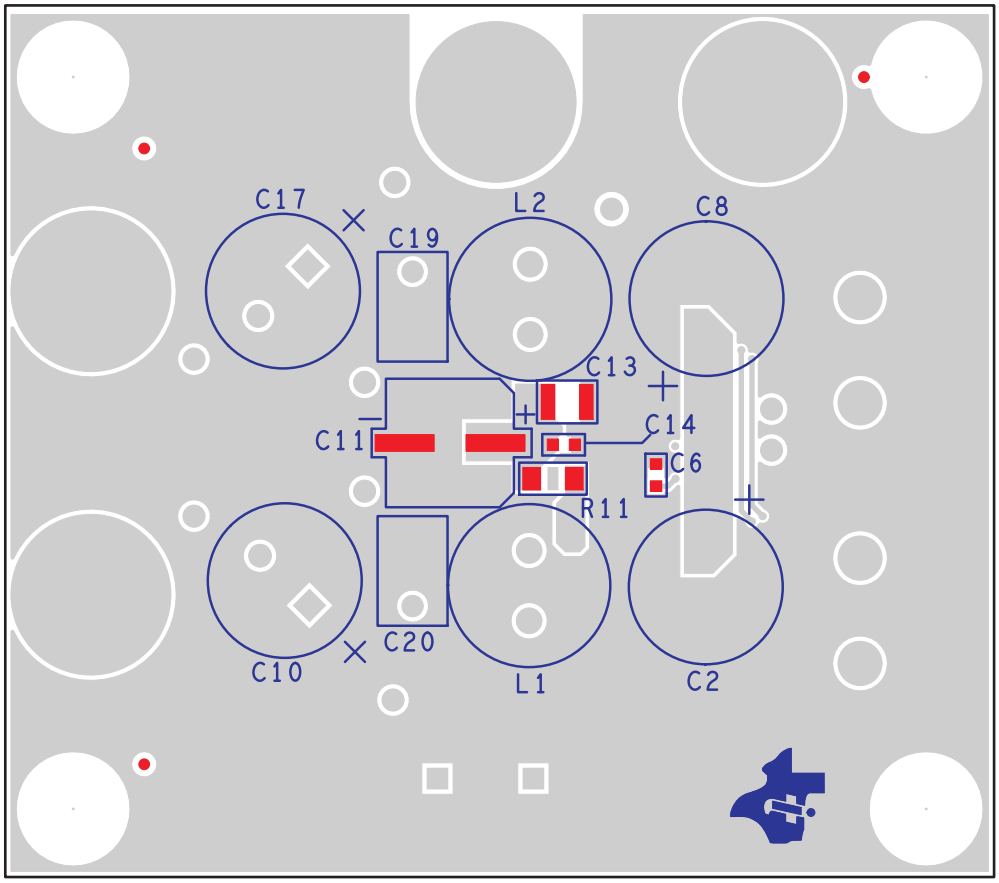

Figure 5. TPA3124D2EVM – Bottom-Side Layout

3.3 TPA3124D2EVM Bill of Materials

Reference	Description	Load Status	Size	QTY	MFG	Part Number
ALL COMPONENTS SHOULD BE ORDERED AS LEAD-FREE						
C1, C7, C14	Capacitor, ceramic, 0.1 µF, ±10%, X7R, 50V		0603	3	TDK	C1608X7R1H104KT
C2, C8, C10, C17	Capacitor, electrolytic, 470 µF, 35V, 105 = C, Low impedance		Radial	4	Nichicon	UHE1V471MH06
C3, C4, C5, C6,	Capacitor, ceramic, 1.0 µF, ±10%, X7R, 16V		0603	4	Taiyo Yuden	EMK107BJ105KA-TR
C9, C16	Capacitor, ceramic, 0.22 µF, ±10%, X7R, 50V	do not install	1206	2	Kemet	C1206C684K5RACTU
C11	Capacitor, electrolytic, 220µF, 35V, 85°C, General Purpose		Radial	1	Panasonic	ECA-1VM221B
C12, C15	Capacitor, ceramic, 0.22 µF, ±10%, X7R, 16V		0603	2	TDK	C1608X7R1C224KT
C13	Capacitor, ceramic, 10 µF, +80%/–20%, Y5V, 50V		1210	1	Murata	GRM32DF51H106ZA01L
C19, C20	Capacitor, metal poly, 0.22 µF, 63V		Radial	2	Epcos, Inc.	B32559C224K000
L1–L2	Inductor, 33 µH, radial lead, ferrite material, shielded		Radial	2	Toko	A7503AY-330M
R1–R4	Resistor, chip, 10 kΩ, 1/16 W, 5%		0603	4	Panasonic	ERA-V15J103V
R6, R7	Resistor, chip, 4.7 kΩ, 1/10 W, 5%		603	2	Panasonic	ERJ-3GEYJ472V
R9, R10	Resistor, chip, 0 Ω, 1/10 W, 5%		603	2	Panasonic	ERJ-3GEY0R00V
R11	Resistor, chip, 0 Ω, 1/4 W, 1%		1206	1	Panasonic	ERJ-SENF2200V
J1–J2	Header, 2-position, Male		2mm	2	Norcomp	2163-36-01-P2
JP1–JP2 (shunts)	SHUNT, 2MM		2mm	2	Specialty	2JM-G
J3–J8	Banana Jack w/knurled Thumbnut (nickel plate)			6	Johnson	111-2223-001
J9–J10	Phono Jack, PC mount, switched			2	Switchcraft	PJRAN1X1U03
SW1, SW2	SWITCH, MOMENTARY, SMD, LOW PROFILE			2	Panasonic	EVQ-PPBA25
	Standoffs, 5/8" length, 4-40 thread			4	Keystone	1808
	Screws, 4-40, 0.375			4		
U1	TPA3124D2PWP		24 pin TSSOP	1	TI	TPA3124D2PWP

EVALUATION BOARD/KIT IMPORTANT NOTICE

Texas Instruments (TI) provides the enclosed product(s) under the following conditions:

This evaluation board/kit is intended for use for **ENGINEERING DEVELOPMENT, DEMONSTRATION, OR EVALUATION PURPOSES ONLY** and is not considered by TI to be a finished end-product fit for general consumer use. Persons handling the product(s) must have electronics training and observe good engineering practice standards. As such, the goods being provided are not intended to be complete in terms of required design-, marketing-, and/or manufacturing-related protective considerations, including product safety and environmental measures typically found in end products that incorporate such semiconductor components or circuit boards. This evaluation board/kit does not fall within the scope of the European Union directives regarding electromagnetic compatibility, restricted substances (RoHS), recycling (WEEE), FCC, CE or UL, and therefore may not meet the technical requirements of these directives or other related directives.

Should this evaluation board/kit not meet the specifications indicated in the User's Guide, the board/kit may be returned within 30 days from the date of delivery for a full refund. THE FOREGOING WARRANTY IS THE EXCLUSIVE WARRANTY MADE BY SELLER TO BUYER AND IS IN LIEU OF ALL OTHER WARRANTIES, EXPRESSED, IMPLIED, OR STATUTORY, INCLUDING ANY WARRANTY OF MERCHANTABILITY OR FITNESS FOR ANY PARTICULAR PURPOSE.

The user assumes all responsibility and liability for proper and safe handling of the goods. Further, the user indemnifies TI from all claims arising from the handling or use of the goods. Due to the open construction of the product, it is the user's responsibility to take any and all appropriate precautions with regard to electrostatic discharge.

EXCEPT TO THE EXTENT OF THE INDEMNITY SET FORTH ABOVE, NEITHER PARTY SHALL BE LIABLE TO THE OTHER FOR ANY INDIRECT, SPECIAL, INCIDENTAL, OR CONSEQUENTIAL DAMAGES.

TI currently deals with a variety of customers for products, and therefore our arrangement with the user **is not exclusive.**

TI assumes **no liability for applications assistance, customer product design, software performance, or infringement of patents or services described herein.**

Please read the User's Guide and, specifically, the Warnings and Restrictions notice in the User's Guide prior to handling the product. This notice contains important safety information about temperatures and voltages. For additional information on TI's environmental and/or safety programs, please contact the TI application engineer or visit www.ti.com/esh.

No license is granted under any patent right or other intellectual property right of TI covering or relating to any machine, process, or combination in which such TI products or services might be or are used.

FCC Warning

This evaluation board/kit is intended for use for **ENGINEERING DEVELOPMENT, DEMONSTRATION, OR EVALUATION PURPOSES ONLY** and is not considered by TI to be a finished end-product fit for general consumer use. It generates, uses, and can radiate radio frequency energy and has not been tested for compliance with the limits of computing devices pursuant to part 15 of FCC rules, which are designed to provide reasonable protection against radio frequency interference. Operation of this equipment in other environments may cause interference with radio communications, in which case the user at his own expense will be required to take whatever measures may be required to correct this interference.

EVM WARNINGS AND RESTRICTIONS

It is important to operate this EVM within the input voltage range of 10 V to 26 V and input current of 3 A maximum.

Exceeding the specified input range may cause unexpected operation and/or irreversible damage to the EVM. If there are questions concerning the input range, please contact a TI field representative prior to connecting the input power.

Applying loads outside of the specified output range may result in unintended operation and/or possible permanent damage to the EVM. Please consult the EVM User's Guide prior to connecting any load to the EVM output. If there is uncertainty as to the load specification, please contact a TI field representative.

During normal operation, some circuit components may have case temperatures greater than 60°C . The EVM is designed to operate properly with certain components above 60°C as long as the input and output ranges are maintained. These components include but are not limited to linear regulators, switching transistors, pass transistors, and current sense resistors. These types of devices can be identified using the EVM schematic located in the EVM User's Guide. When placing measurement probes near these devices during operation, please be aware that these devices may be very warm to the touch.

Mailing Address: Texas Instruments, Post Office Box 655303, Dallas, Texas 75265
Copyright © 2008, Texas Instruments Incorporated

IMPORTANT NOTICE

Texas Instruments Incorporated and its subsidiaries (TI) reserve the right to make corrections, modifications, enhancements, improvements, and other changes to its products and services at any time and to discontinue any product or service without notice. Customers should obtain the latest relevant information before placing orders and should verify that such information is current and complete. All products are sold subject to TI's terms and conditions of sale supplied at the time of order acknowledgment.

TI warrants performance of its hardware products to the specifications applicable at the time of sale in accordance with TI's standard warranty. Testing and other quality control techniques are used to the extent TI deems necessary to support this warranty. Except where mandated by government requirements, testing of all parameters of each product is not necessarily performed.

TI assumes no liability for applications assistance or customer product design. Customers are responsible for their products and applications using TI components. To minimize the risks associated with customer products and applications, customers should provide adequate design and operating safeguards.

TI does not warrant or represent that any license, either express or implied, is granted under any TI patent right, copyright, mask work right, or other TI intellectual property right relating to any combination, machine, or process in which TI products or services are used. Information published by TI regarding third-party products or services does not constitute a license from TI to use such products or services or a warranty or endorsement thereof. Use of such information may require a license from a third party under the patents or other intellectual property of the third party, or a license from TI under the patents or other intellectual property of TI.

Reproduction of TI information in TI data books or data sheets is permissible only if reproduction is without alteration and is accompanied by all associated warranties, conditions, limitations, and notices. Reproduction of this information with alteration is an unfair and deceptive business practice. TI is not responsible or liable for such altered documentation. Information of third parties may be subject to additional restrictions.

Resale of TI products or services with statements different from or beyond the parameters stated by TI for that product or service voids all express and any implied warranties for the associated TI product or service and is an unfair and deceptive business practice. TI is not responsible or liable for any such statements.

TI products are not authorized for use in safety-critical applications (such as life support) where a failure of the TI product would reasonably be expected to cause severe personal injury or death, unless officers of the parties have executed an agreement specifically governing such use. Buyers represent that they have all necessary expertise in the safety and regulatory ramifications of their applications, and acknowledge and agree that they are solely responsible for all legal, regulatory and safety-related requirements concerning their products and any use of TI products in such safety-critical applications, notwithstanding any applications-related information or support that may be provided by TI. Further, Buyers must fully indemnify TI and its representatives against any damages arising out of the use of TI products in such safety-critical applications.

TI products are neither designed nor intended for use in military/aerospace applications or environments unless the TI products are specifically designated by TI as military-grade or "enhanced plastic." Only products designated by TI as military-grade meet military specifications. Buyers acknowledge and agree that any such use of TI products which TI has not designated as military-grade is solely at the Buyer's risk, and that they are solely responsible for compliance with all legal and regulatory requirements in connection with such use.

TI products are neither designed nor intended for use in automotive applications or environments unless the specific TI products are designated by TI as compliant with ISO/TS 16949 requirements. Buyers acknowledge and agree that, if they use any non-designated products in automotive applications, TI will not be responsible for any failure to meet such requirements.

Following are URLs where you can obtain information on other Texas Instruments products and application solutions:

Products		**Applications**	
Amplifiers	amplifier.ti.com	Audio	www.ti.com/audio
Data Converters	dataconverter.ti.com	Automotive	www.ti.com/automotive
DSP	dsp.ti.com	Broadband	www.ti.com/broadband
Clocks and Timers	www.ti.com/clocks	Digital Control	www.ti.com/digitalcontrol
Interface	interface.ti.com	Medical	www.ti.com/medical
Logic	logic.ti.com	Military	www.ti.com/military
Power Mgmt	power.ti.com	Optical Networking	www.ti.com/opticalnetwork
Microcontrollers	microcontroller.ti.com	Security	www.ti.com/security
RFID	www.ti-rfid.com	Telephony	www.ti.com/telephony
RF/IF and ZigBee® Solutions	www.ti.com/lprf	Video & Imaging	www.ti.com/video
		Wireless	www.ti.com/wireless

Mailing Address: Texas Instruments, Post Office Box 655303, Dallas, Texas 75265
Copyright © 2008, Texas Instruments Incorporated