TPA2015D1 2-W Constant Output Power Class-D Audio Amplifier With Adaptive Boost Converter and Battery Tracking Speakerguard™ AGC

1 Features

- Built-In SpeakerGuard™ Automatic Gain Control (AGC) with Enhanced Battery Tracking
  - Limits Battery Current Consumption
  - Prevents Audio Clipping
- 2 W into 8 Ω Load From 3.6 V Supply (6% THD)
- Integrated Adaptive Boost Converter
  - Increases Efficiency at Low Output Power
- Low Quiescent Current of 1.7 mA from 3.6 V
- Operates From 2.5 V to 5.2 V
- Thermal and Short-Circuit Protection with Auto Recovery
- Three Gain Settings: 6 dB, 15.5 dB, and 20 dB
- Independent Control for Boost and Class-D
- Pin-to-Pin Compatible with TPA2013D1
- Available in 1.954 mm × 1.954 mm 16-ball DSBGA Package

2 Applications

- Cell Phones, PDA, GPS
- Portable Electronics and Speakers

3 Description

The TPA2015D1 is a high efficiency Class-D audio power amplifier with battery-tracking SpeakerGuard™ AGC technology and an integrated adaptive boost converter that enhances efficiency at low output power. It drives up to 2 W into an 8 Ω speaker (6% THD). With 85% typical efficiency, the TPA2015D1 helps extend battery life when playing audio.

The built-in boost converter generates a 5.5 V supply voltage for the Class-D amplifier. This provides a louder audio output than a stand-alone amplifier directly connected to the battery. The SpeakerGuard™ AGC adjusts the Class-D gain to limit battery current and prevent heavy clipping.

The TPA2015D1 has an integrated low-pass filter to improve the RF rejection and reduce DAC out-of-band noise, increasing the signal to noise ratio (SNR).

The TPA2015D1 is available in a space saving 1.954 mm × 1.954 mm, 0.5 mm pitch DSBGA package (YZH).

Device Information(1)

PART NUMBER	PACKAGE	BODY SIZE (NOM)
TPA2015D1	DSBGA (16)	2.0 mm × 2.0 mm
SN012020	DSBGA (16)	2.0 mm x 2.0 mm

(1) For all available packages, see the orderable addendum at the end of the data sheet.

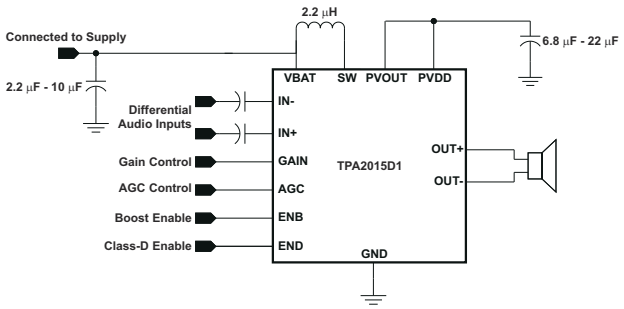

Simplified Application Schematic

An IMPORTANT NOTICE at the end of this data sheet addresses availability, warranty, changes, use in safety-critical applications, intellectual property matters and other important disclaimers. PRODUCTION DATA.

Table of Contents

1 Features....1
2 Applications....1
3 Description....1
4 Revision History....2
5 Device Comparison Table....3
6 Pin Configuration and Functions....3
7 Specifications....4
7.1 Absolute Maximum Ratings....4
7.2 ESD Ratings....4
7.3 Recommended Operating Conditions....4
7.4 Thermal Information....4
7.5 Electrical Characteristics....5
7.6 Operating Characteristics....5
7.7 Typical Characteristics....7
8 Parameter Measurement Information....10
9 Detailed Description....11
9.1 Overview....11
9.2 Functional Block Diagram....11
9.3 Feature Description....11
9.4 Device Functional Modes....17
10 Application and Implementation....19
10.1 Application Information....19
10.2 Typical Applications....19
11 Power Supply Recommendations....23
11.1 Power Supply Decoupling Capacitors....23
12 Layout....24
12.1 Layout Guidelines....24
12.2 Layout Example....25
13 Device and Documentation Support....26
13.1 Device Support....26
13.2 Community Resources....27
13.3 Trademarks....27
14 Mechanical, Packaging, and Orderable Information....28
14.1 Package Option Addendum....29

4 Revision History

NOTE: Page numbers for previous revisions may differ from page numbers in the current version.

Changes from Revision B (October 2015) to Revision C (June 2022)	Page
• Added SN012020 device to data sheet	1

Changes from Revision A (November 2011) to Revision B (October 2015)	Page
• Added *Pin Configuration and Functions* section, *ESD Ratings* table, *Feature Description* section, *Device Functional Modes*, *Application and Implementation* section, *Power Supply Recommendations* section, *Layout* section, *Device and Documentation Support* section, and *Mechanical, Packaging, and Orderable Information* section	1

Changes from Revision * (May 2010) to Revision A (November 2011)	Page
• Changed the Boost Converter, PVOUT entry in the Operating Conditions Table	5

Copyright © 2022 Texas Instruments Incorporated

5 Device Comparison Table

DEVICE NUMBER	SPEAKER CHANNELS	SPEAKER AMP TYPE	OUTPUT POWER (W)	PSRR (dB)
TPA2012D2	Stereo	Class D	2.1	71
TPA2015D1	Mono	Class D	2	85
TPA2026D2	Stereo	Class D	3.2	80
TPA2028D1	Mono	Class D	3	80

6 Pin Configuration and Functions

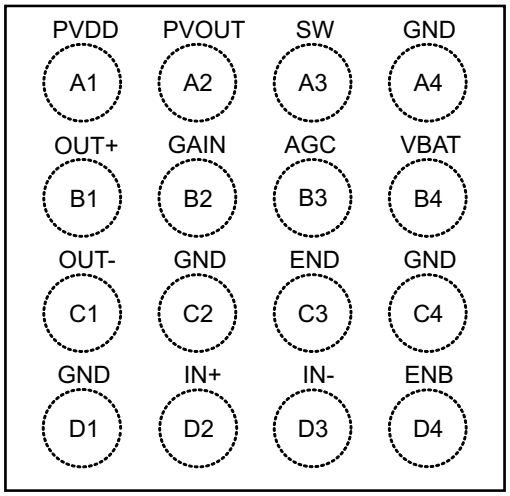

Figure 6-1. YZH Package 16-Pin DSBGA Top View

Table 6-1. Pin Functions

PIN		TYPE(1)	DESCRIPTION
NAME	NO.		
AGC	B3	I	Enable and select AGC.
ENB	D4	I	Enable for the boost converter; set to logic high to enable.
END	C3	I	Enable for the Class-D amplifier; set to logic high to enable.
GAIN	B2	I	Gain selection pin.
GND	A4, C2, C4, D1	P	Ground; all ground balls must be connected for proper functionality.
IN–	D3	I	Negative audio input.
IN+	D2	I	Positive audio input.
OUT–	C1	O	Negative audio output.
OUT+	B1	O	Positive audio output.
PVDD	A1	I	Class-D power stage supply voltage.
PVOUT	A2	O	Boost converter output.
SW	A3	I	Boost and rectifying switch input.
VBAT	B4	P	Supply voltage.

(1) I = Input, O = Output, P = Power

Copyright © 2022 Texas Instruments Incorporated

7 Specifications

7.1 Absolute Maximum Ratings

over operating free-air temperature range (unless otherwise noted)(1)

		MIN	MAX	UNIT
Supply voltage	VBAT	–0.3	6	V
Input Voltage, V_I	IN+, IN–	–0.3	VBAT + 0.3	V
Output continuous total power dissipation		See the *Section 7.4*		
Minimum load impedance		6		Ω
Operating free-air temperature, T_A		–40	85	°C
Operating junction temperature, T_J		–40	150	°C
Storage temperature, T_{stg}		–65	150	°C

(1) Stresses beyond those listed under *Absolute Maximum Ratings* may cause permanent damage to the device. These are stress ratings only, which do not imply functional operation of the device at these or any other conditions beyond those indicated under *Recommended Operating Conditions*. Exposure to absolute-maximum-rated conditions for extended periods may affect device reliability.

7.2 ESD Ratings

			VALUE	UNIT
$V_{(ESD)}$	Electrostatic discharge	Human-body model (HBM), per ANSI/ESDA/JEDEC JS-001(1)	±2000	V
		Charged-device model (CDM), per JEDEC specification JESD22-C101(2)	±500	

(1) JEDEC document JEP155 states that 500-V HBM allows safe manufacturing with a standard ESD control process.
(2) JEDEC document JEP157 states that 250-V CDM allows safe manufacturing with a standard ESD control process.

7.3 Recommended Operating Conditions

		MIN	NOM	MAX	UNIT
	Supply voltage, VBAT	2.5		5.2	V
V_{IH}	High–level input voltage, END, ENB	1.3			V
V_{IL}	Low–level input voltage, END, ENB			0.6	V
T_A	Operating free-air temperature	–40		85	°C
T_J	Operating junction temperature	–40		150	°C

7.4 Thermal Information

THERMAL METRIC(1)		TPA2015D1 YZH (DSBGA) 16 PINS	UNIT
$R_{\theta JA}$	Junction-to-ambient thermal resistance	75	°C/W
$R_{\theta JC(top)}$	Junction-to-case (top) thermal resistance	22	°C/W
$R_{\theta JB}$	Junction-to-board thermal resistance	26	°C/W
ψ_{JT}	Junction-to-top characterization parameter	0.5	°C/W
ψ_{JB}	Junction-to-board characterization parameter	25	°C/W
$R_{\theta JC(bot)}$	Junction-to-case (bottom) thermal resistance	n/a	°C/W

(1) For more information about traditional and new thermal metrics, see the *Semiconductor and IC Package Thermal Metrics* application report, SPRA953.

Copyright © 2022 Texas Instruments Incorporated

7.5 Electrical Characteristics

VBAT= 3.6 V, Gain = 6 dB, R_{AGC} = Float, T_A = 25°C, R_L = 8 Ω + 33 µH (unless otherwise noted)

PARAMETER	TEST CONDITIONS	MIN	TYP	MAX	UNIT
VBAT supply voltage range	END = 0 V, ENB = VBAT	2.5		5.2	V
	END = VBAT, ENB = VBAT, AGC options 1, 2, and 3	2.5		5.2	
	END = VBAT, ENB = VBAT, AGC option 0	2.8		5.2	
Class-D supply voltage range	END = ENB = VBAT, boost converter active	5.2		5.8	V
	END = VBAT, ENB = 0 V	3.1		5.25	V
Power supply ripple rejection	VBAT = 2.5 V to 5.2 V, END = ENB = VBAT		85		dB
	VBAT = 2.5 V to 5.2 V, END = VBAT, ENB = 0 V (pass through mode)		75		
Operating quiescent current	END = 0 V, ENB = VBAT		0.5		mA
	END = ENB = VBAT		1.7	2.2	mA
Shutdown quiescent current	VBAT = 2.5 V to 5.2 V, END = ENB = GND		0.2	3	µA
Gain control pin voltage	Gain = 6 dB (connect to GND)	0		0.25 × VBAT	V
	Gain = 15.5 dB (float)	0.4 × VBAT		0.6 × VBAT	
	Gain = 20 dB (connect to VBAT)	0.75 × VBAT			
AGC control pin voltage	AGC with no inflection point, $R_{(AGC)}$ = Open	2			V
	AGC option 1 (inflection = 3.55 V), $R_{(AGC)}$ = 39 kΩ (±5%)	1.36		1.75	
	AGC option 2 (inflection = 3.78 V) , $R_{(AGC)}$ = 27 kΩ (±5%)	0.94		1.2	
	AGC option 3 (inflection = 3.96 V) , $R_{(AGC)}$ = 18 kΩ (±5%)	0		0.825	
AGC control pin output current		37.6	40	42.4	µA
Input common-mode voltage range	IN+, IN–	0.6		1.3	V
Start-up time	Boost converter followed by Class-D amplifier		6	10	ms
	Boost converter only		1	4	
	Class-D amplifier only		5	6	

7.6 Operating Characteristics

VBAT = 3.6 V, T_A = 25°C, R_L = 8 Ω + 33 µH (unless otherwise noted)

PARAMETER		TEST CONDITIONS	MIN	TYP	MAX	UNIT
BOOST CONVERTER						
$V_{(PVOUT)}$	Boost converter output voltage range	$I_{(BOOST)}$ = 0 mA	5.4		6	V
		$I_{(BOOST)}$ = 700 mA		5.4		
I_L	Boost converter input current limit	Power supply current		1500		mA
	Boost converter start-up current limit			450		mA
η	Boost converter efficiency	END = 0 V, $I_{(PVOUT)}$ = 100 mA constant		88%		
f_{BOOST}	Boost converter frequency			1.2		MHz
CLASS-D AMPLIFIER						
P_O	Output power	THD = 1%, VBAT = 2.5 V, f = 1 kHz		1200		mW
		THD = 1%, VBAT = 3 V, f = 1 kHz		1500		
		THD = 1%, VBAT = 3.6 V, f = 1 kHz		1700		
V_O	Output peak voltage	THD = 1%, VBAT = 3 V, f = 1 kHz, 6 dB crest factor sine burst, no clipping		5.2		V

Copyright © 2022 Texas Instruments Incorporated

VBAT = 3.6 V, T_A = 25°C, R_L = 8 Ω + 33 µH (unless otherwise noted)

PARAMETER		TEST CONDITIONS	MIN	TYP	MAX	UNIT
A_V	Closed-loop voltage gain	GAIN < 0.25 × VBAT		6		dB
		0.4 × VBAT < GAIN < 0.6 × VBAT (or float)		15.5		
		GAIN > 0.75 × VBAT		20		
ΔA_V	Gain accuracy		–0.5		0.5	dB
V_{OOS}	Output offset voltage				10	mV
R_{IN}	Input impedance (per input pin)	A_V = 6 dB		27.8		kΩ
		A_V = 15.5 dB		14.9		
		A_V = 20 dB		10.1		
	Input impedance in shutdown (per input pin)	END = 0 V		88.4		kΩ
Z_O	Output impedance in shutdown	END = 0 V		2		kΩ
$f_{CLASS-D}$	Switching frequency		560	600	640	kHz
E_N	Noise output voltage	A-weighted, GAIN = 6 dB		24.8		μV_{RMS}
		A-weighted, GAIN = 15.5 dB		33.4		
		A-weighted, GAIN = 20 dB		42.4		
THD+N	Total harmonic distortion plus noise(1)	P_O = 100 mW, f = 1 kHz		0.06%		
		P_O = 500 mW, f = 1 kHz		0.07%		
AC PSRR	AC-Power supply ripple rejection (output referred)	200 mV_{PP} ripple, f = 217 Hz		75		dB
		200 mV_{PP} ripple, f = 4 kHz		70		
	Audio frequency passband ripple	f_{AUDIO} = 20 Hz, C_{IN} = 1 µF	–0.2	–0.1	0	dB
		f_{AUDIO} = 16 kHz, C_{IN} = 1 µF	–0.2	–0.1	0	
AUTOMATIC GAIN CONTROL						
	AGC gain range		0		20	dB
	AGC gain step size			0.5		dB
	AGC attack time (gain decrease)			0.026		ms/dB
	AGC release time (gain increase)			1600		ms/dB
	Limiter threshold voltage	VBAT > inflection point		6.15		V
	VBAT vs. Limiter slope	VBAT < inflection point		3		V/V
	AGC inflection point	AGC option 1, $R_{(AGC)}$ = 39 kΩ (±5%)		3.55		V
		AGC option 2, $R_{(AGC)}$ = 27 kΩ (±5%)		3.78		
		AGC option 3, $R_{(AGC)}$ = 18 kΩ (±5%)		3.96		

(1) A-weighted

Copyright © 2022 Texas Instruments Incorporated

7.7 Typical Characteristics

V_{BAT} = 3.6 V, Gain = 6 dB, C_I = 1 µF, C_{BOOST} = 22 µF, L_{BOOST} = 2.2 µH, AGC = Float, ENB = END = V_{BAT}, and Load = 8 Ω + 33 µH unless otherwise specified.

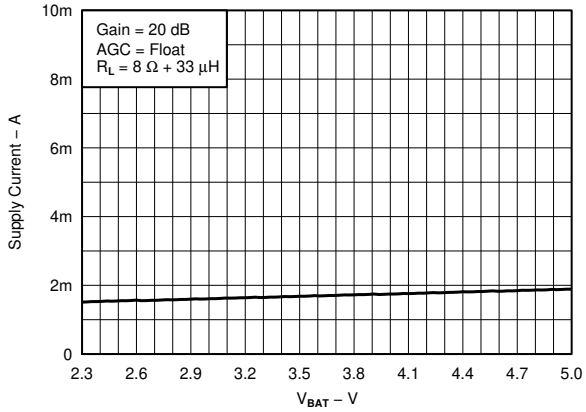

Figure 7-1. Quiescent Supply Current vs Supply Voltage

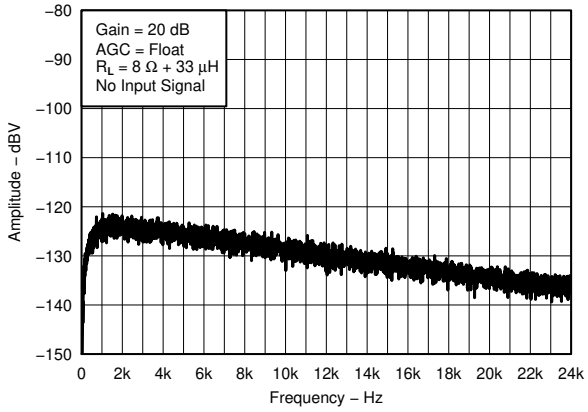

Figure 7-2. A-Weighted Output Noise vs Frequency

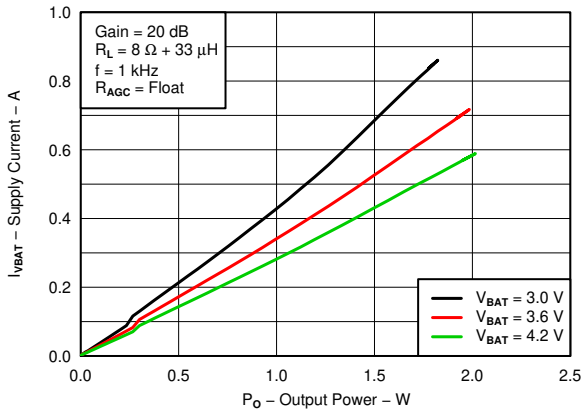

Figure 7-3. Supply Current vs Output Power

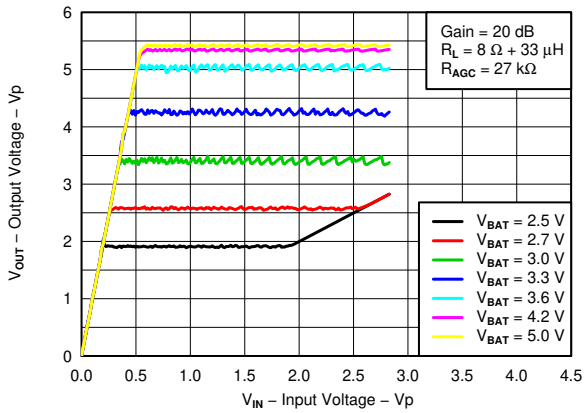

Figure 7-4. Peak Output Voltage vs Peak Input Voltage

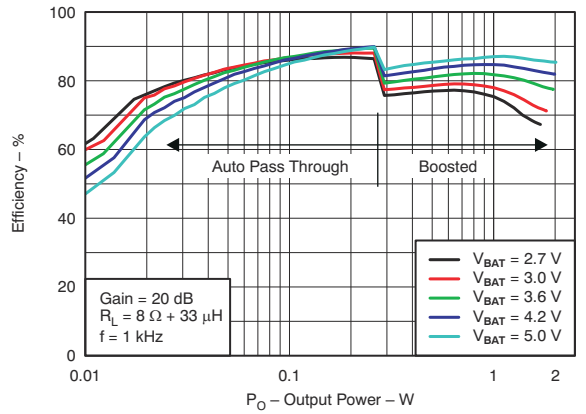

Figure 7-5. Total Efficiency vs Output Power

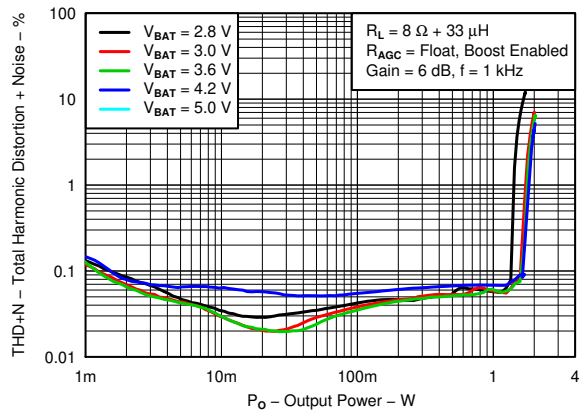

Figure 7-6. Total Harmonic Distortion + Noise vs Output Power

Copyright © 2022 Texas Instruments Incorporated

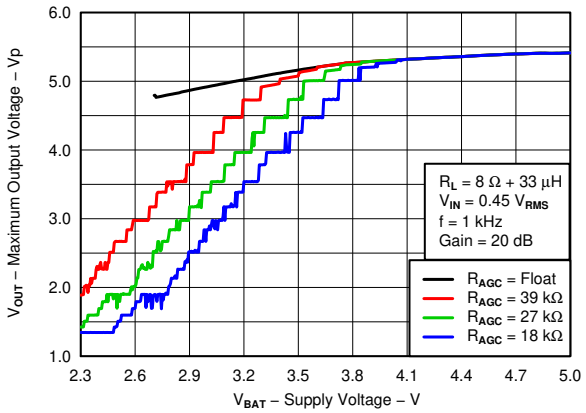

Figure 7-7. Maximum Output Voltage vs Supply Voltage

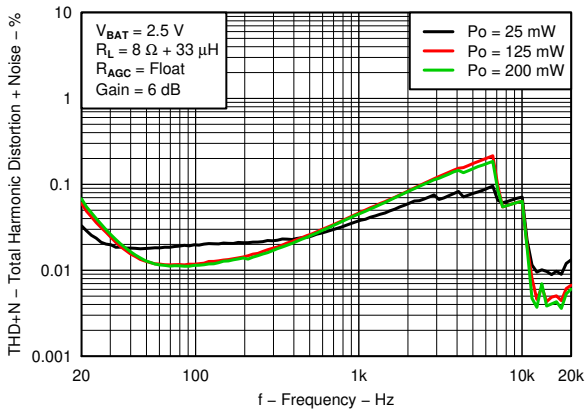

Figure 7-8. Total Harmonic Distortion + Noise vs Frequency

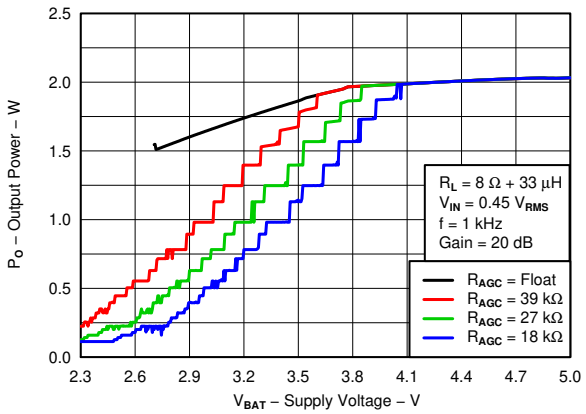

Figure 7-9. Output Power vs Supply Voltage

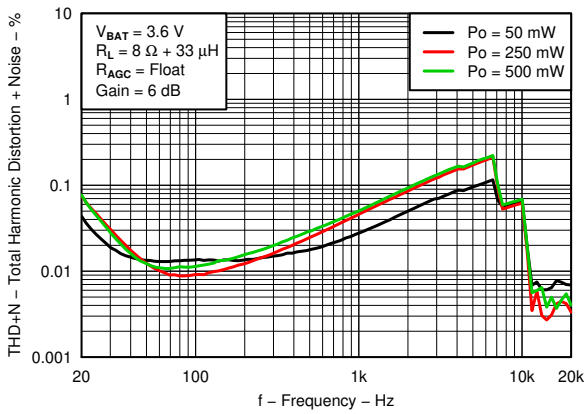

Figure 7-10. Total Harmonic Distortion + Noise vs Frequency

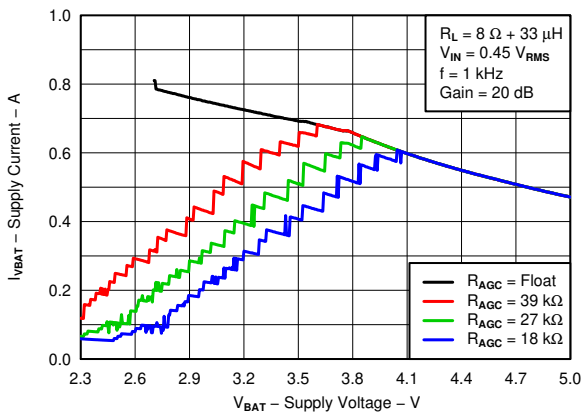

Figure 7-11. Supply Current vs Supply Voltage

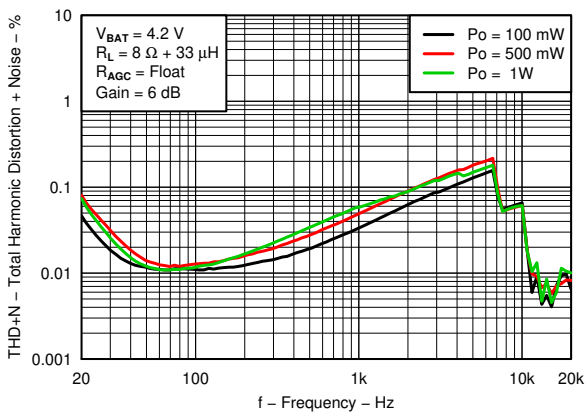

Figure 7-12. Total Harmonic Distortion + Noise vs Frequency

Copyright © 2022 Texas Instruments Incorporated

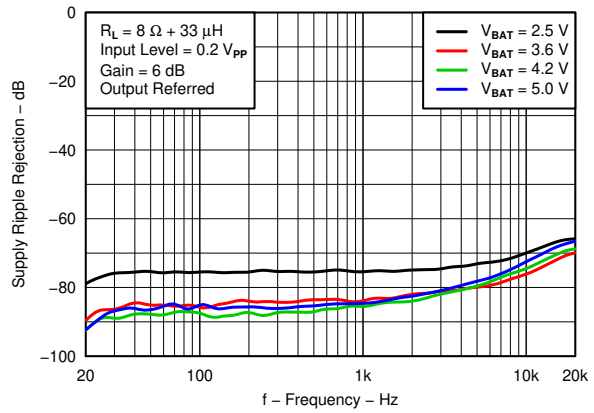

Figure 7-13. Supply Ripple Rejection vs Frequency

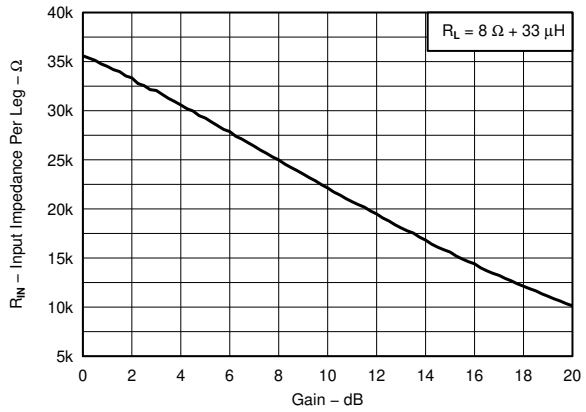

Figure 7-14. Input Impedance (Per Input) vs Gain

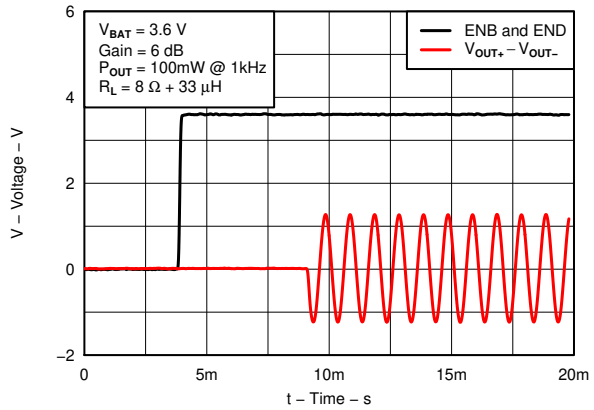

Figure 7-15. Startup Timing

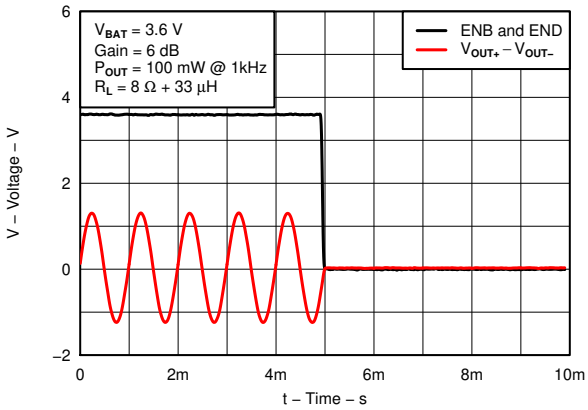

Figure 7-16. Shutdown Timing

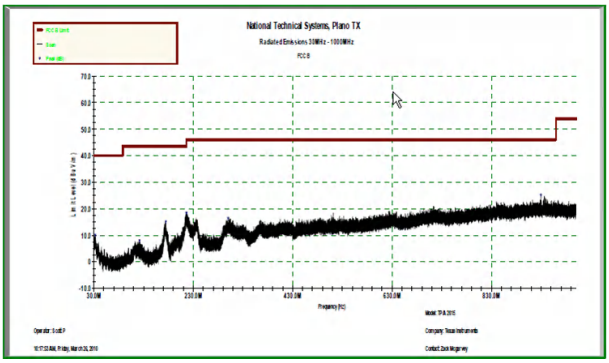

Figure 7-17. Emc Performance P_O = 50 mW With 2 Inch Speaker Cable

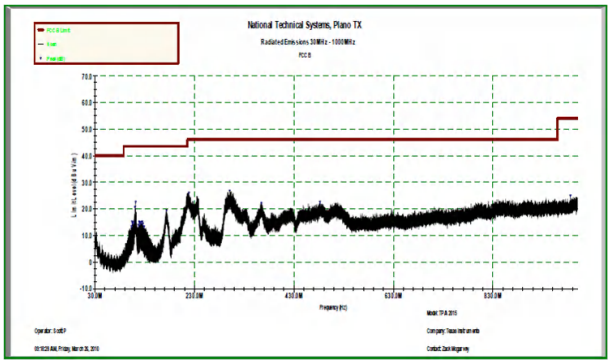

Figure 7-18. Emc Performance P_O = 750 mW With 2 Inch Speaker Cable

8 Parameter Measurement Information

All parameters are measured according to the conditions described in the *Section 7* section.

Figure 8-1 shows the setup used to test the device's typical characteristics.

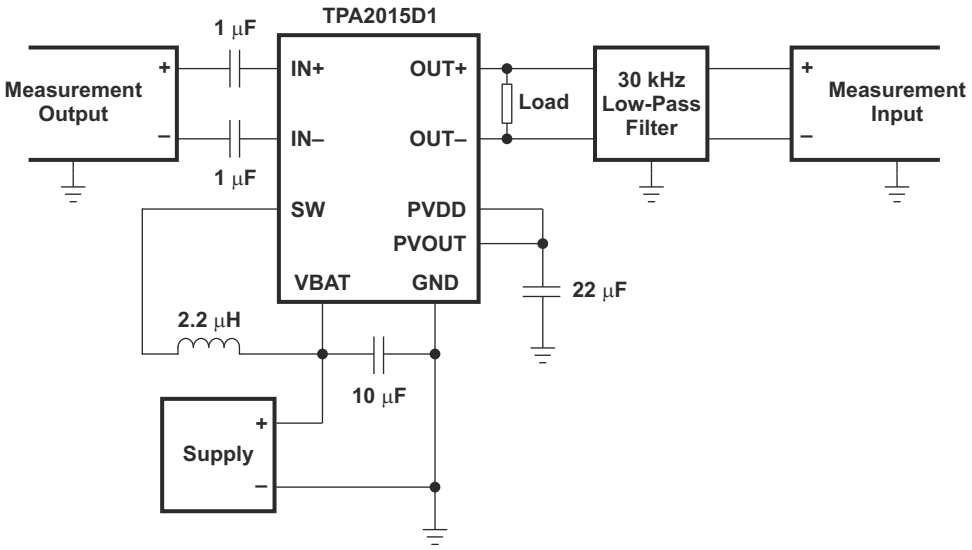

A. The 1 µF input capacitors (C_I) were shorted for input common-mode voltage measurements.
B. A 33 µH inductor was placed in series with the load resistor to emulate a small speaker for efficiency measurements.
C. The 30 kHz low-pass filter is required even if the analyzer has an internal low-pass filter. An R-C low pass filter (100 Ω, 47 nF) is used on each output for the data sheet graphs.

Figure 8-1. Test Setup for Typical Characteristics Graphs

Copyright © 2022 Texas Instruments Incorporated

9 Detailed Description

9.1 Overview

The TPA2015D1 is a high efficiency Class-D audio power amplifier with battery-tracking SpeakerGuard™ AGC technology. It drives up to 2 W into an 8 Ω speaker.

The built-in boost converter generates a 5.5 V supply voltage for the Class-D amplifier. The SpeakerGuard™ AGC adjusts the Class-D gain to limit battery current and prevent heavy clipping. The TPA2015D1 has an integrated low-pass filter to improve the RF rejection and reduce DAC out-of-band noise, increasing the signal to noise ratio (SNR).

See *Section 13.1.1.1* for a list of terms and definitions used throughout the following sections.

9.2 Functional Block Diagram

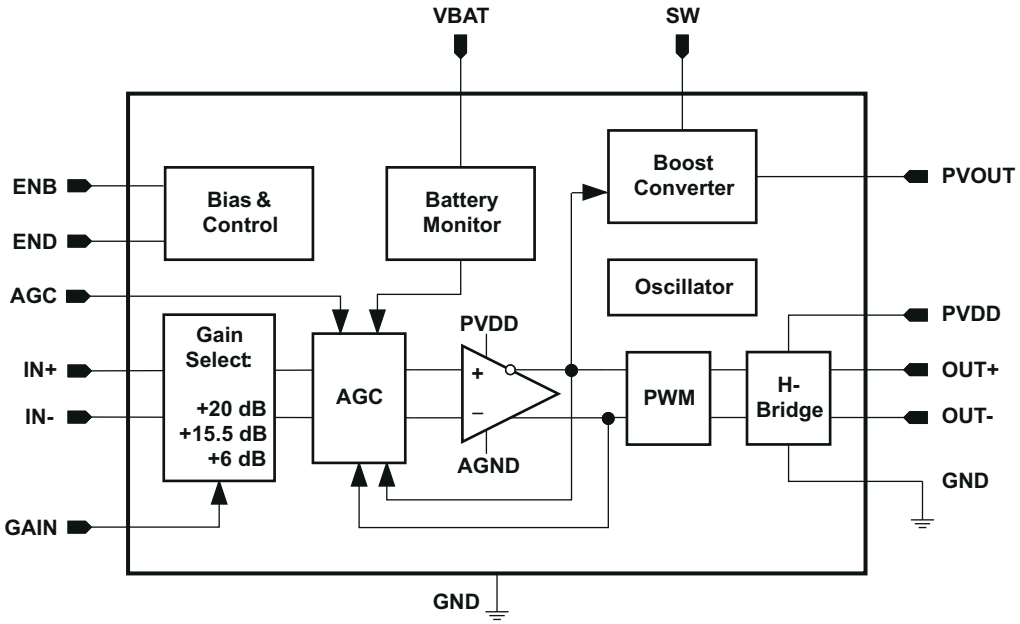

9.3 Feature Description

9.3.1 SpeakerGuard™ Theory of Operation

SpeakerGuard™ protects speakers, improves loudness, and limits peak supply current. If the output audio signal exceeds the limiter level, then SpeakerGuard™ decreases amplifier gain. The rate of gain decrease, the attack time, is fixed at 0.026 ms/dB. SpeakerGuard™ increases the gain once the output audio signal is below the limiter level. The rate of gain increase, the release time, is fixed at 1600 ms/dB. Figure 9-1 shows this relationship.

Copyright © 2022 Texas Instruments Incorporated

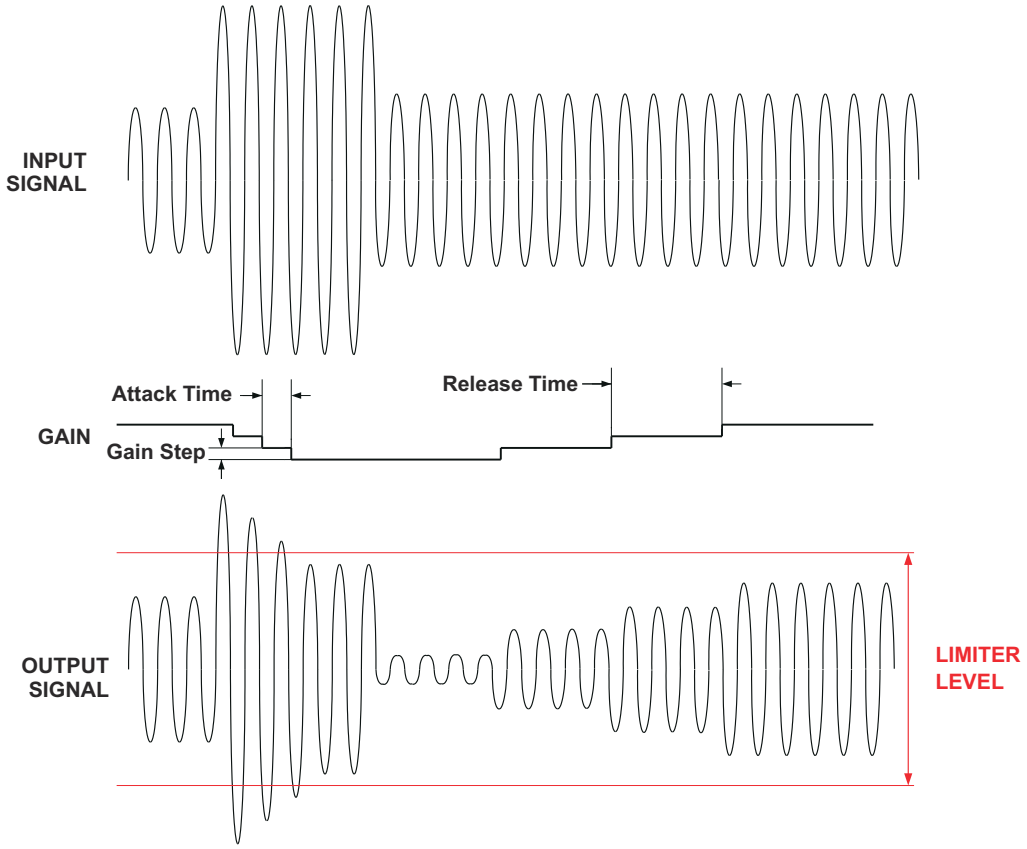

Figure 9-1. SpeakerGuard™ Attack and Release Times

9.3.1.1 SpeakerGuard™ With Varying Input Levels

SpeakerGuard™ protects speakers by decreasing gain during large output transients. Figure 9-2 shows the maximum output voltage at different input voltage levels. The load is 8 Ω and the gain is 15.5 dB (6 V/V).

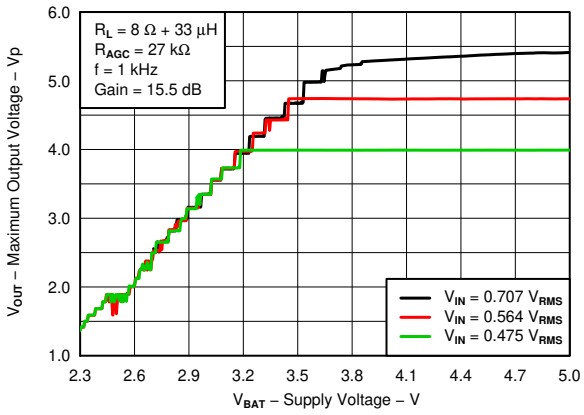

Figure 9-2. Maximum Output Voltage vs Supply Voltage

A 0.707 V_{RMS} sine-wave input signal forces the output voltage to 4.242 V_{RMS}, or 6.0 V_{PEAK}. Above 3.9 V supply, the boost converter voltage sags due to high output current, resulting in a peak Class-D output voltage of about 5.4 V. As the supply voltage decreases below 3.9 V, the limiter level decreases. This causes the gain to decrease, and the peak Class-D output voltage lowers.

Copyright © 2022 Texas Instruments Incorporated

With a 0.564 V_{RMS} input signal, the peak Class-D output voltage is 4.78 V. When the supply voltage is above 3.45 V, the output voltage remains below the limiter level, and the gain stays at 15.5 dB. Once the supply drops below 3.45 V, the limiter level decreases below 4.78 V, and SpeakerGuard™ decreases the gain.

The same rationale applies to the 0.475 V_{RMS} input signal. Although the supply voltage may be below the inflection point, audio gain does not decrease until the Class-D output voltage is above the limiter level.

9.3.1.2 Battery Tracking SpeakerGuard™

The TPA2015D1 monitors the battery voltage and the audio signal, automatically decreasing gain when battery voltage is low and audio output power is high. It finds the optimal gain to maximize loudness and minimize battery current, providing louder audio and preventing early shutdown at end-of-charge battery voltages. SpeakerGuard™ decreases amplifier gain when the audio signal exceeds the limiter level. The limiter level automatically decreases when the supply voltage (VBAT) is below the inflection point. Figure 9-3 shows a plot of the limiter level as a function of the supply voltage.

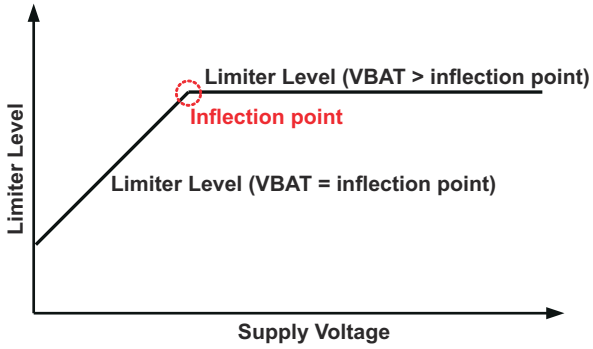

Figure 9-3. Limiter Level vs Supply Voltage

The limiter level decreases within 60 µs of the supply voltage dropping below the inflection point. Although this is slightly slower than the 26 µs/dB SpeakerGuard™ attack time, the difference is audibly imperceptible.

Connect a resistor between the AGC pin and ground to set the inflection point, as shown in Table 9-1. Leave the AGC pin floating to disable the inflection point, keeping the limiter level constant over all supply voltages.

The maximum limiter level is fixed, as is the slope of the limiter level versus supply voltage. If different values for maximum limiter level and slope are required, contact your local Texas Instruments representative.

Table 9-1. AGC Function Table

FUNCTION	RESISTOR ON AGC PIN	INFLECTION POINT
Constant limiter level; battery track OFF	Floating or connected to VBAT	disabled
AGC battery track option 1	39 kΩ	3.55 V
AGC battery track option 2	27 kΩ	3.78 V
AGC battery track option 3	18 kΩ	3.96 V

The audio signal is not affected by the SpeakerGuard™ function unless the peak audio output voltage exceeds the limiter level. Figure 9-7 shows the relationship between the audio signal, the limiter level, the supply voltage, and the supply current.

When VBAT is greater than the inflection point, the limiter level allows the output signal to slightly clip to roughly 6% THD at 2 W into 8 Ω. This is an acceptable peak distortion level for most small-sized portable speakers, while ensuring maximum loudness from the speaker.

9.3.2 Fully Differential Class-D Amplifier

The TPA2015D1 uses a fully differential amplifier with differential inputs and outputs. The differential output voltage equals the differential input multiplied by the amplifier gain. The TPA2015D1 can also be used with a single-ended input. However, using differential input signals when in a noisy environment, like a wireless handset, ensures maximum system noise rejection.

Copyright © 2022 Texas Instruments Incorporated

9.3.2.1 Advantages of Fully Differential Amplifiers

- Mid-supply bypass capacitor, C_{BYPASS}, not required:
  - The fully differential amplifier does not require a mid-supply bypass capacitor. Any shift in the mid-supply affects both positive and negative channels equally and cancels at the differential output.
- Improved RF-immunity:
  - GSM handsets save power by turning on and shutting off the RF transmitter at a rate of 217 Hz. This 217 Hz burst often couples to audio amplifier input and output traces causing frame-rate noise. Fully differential amplifiers cancel frame-rate noise better than non-differential amplifiers.
- Input-coupling capacitors not required, but recommended:
  - The fully differential amplifier allows the inputs to be biased at voltages other than mid-supply (PVDD/2). The TPA2015D1 inputs can be biased anywhere within the common mode input voltage range, as listed in the *Section 7.6* table. If the inputs are biased outside of that range, then input-coupling capacitors are required.
  - Note that without input coupling capacitors, any dc offset from the audio source will be modulated by the AGC. This could cause artifacts in the audio output signal. Perform listening tests to determine if direct input coupling is acceptable.

9.3.2.2 Improved Class-D Efficiency

The TPA2015D1 output stage uses a modulation technique that modulates the PWM output only on one side of the differential output, leaving the other side held at ground. Although the differential output voltage is undistorted, each output appears as a half-wave rectified signal.

This technique reduces output switching losses and improves overall amplifier efficiency. Figure 9-4 shows how OUT+, OUT-, and the differential output voltages appear on an oscilloscope.

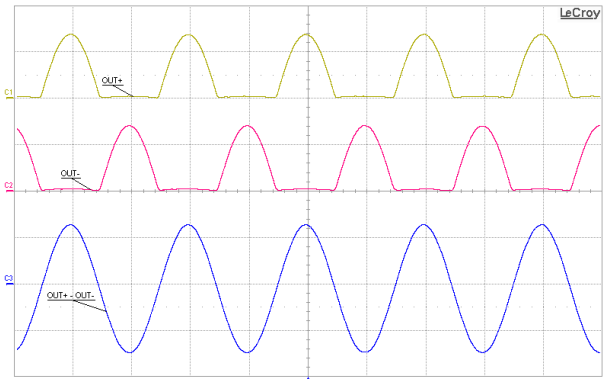

C1(YELLOW) is OUT+ C2(PINK) is OUT– C3(CYAN) is OUT+ - OUT–

Figure 9-4. Filtered Output Waveforms

9.3.3 Adaptive Boost Converter

The TPA2015D1 consists of an adaptive boost converter and a Class-D amplifier. The boost converter takes the supply voltage, VBAT, and increases it to a higher output voltage, PVOUT. PVOUT drives the supply voltage of the Class-D amplifier, PVDD. This improves loudness over non-boosted solutions.

The boost converter is adaptive and activates automatically depending on the output audio signal amplitude. When the peak output audio signal exceeds a preset voltage threshold, the boost converter is enabled, and the voltage at PVOUT is 5.5 V. When the audio output voltage is lower than the threshold voltage, the boost deactivates automatically. The boost activation threshold voltage is not user programmable. It is optimized to prevent clipping while maximizing system efficiency.

The boost converter can be forcibly deactivated by setting the ENB pin to logic-low. When the boost is deactivated, PVOUT is equal to the supply voltage (VBAT) minus the I x R drop across the inductor and boost converter pass transistor.

Copyright © 2022 Texas Instruments Incorporated

A timer prevents the input signal from modulating the PVOUT voltage within the audio frequency range, eliminating the potential for audible artifacts on the Class-D output.

Figure 9-5 shows how the adaptive boost modulates with a typical audio signal. By automatically deactivating the boost converter and passing VBAT to PVOUT, the TPA2015D1 efficiency is improved at low output power.

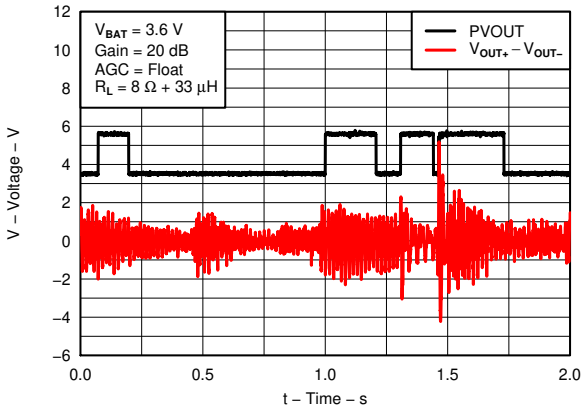

Figure 9-5. Adaptive Boost Converter With Typical Music Playback

The primary external components for the boost converter are the inductor and the boost capacitor. The inductor stores current, and the boost capacitor stores charge. As the Class-D amplifier depletes the charge in the boost capacitor, the boost inductor replenishes charge with its stored current. The cycle of charge and discharge occurs frequently enough to keep PVOUT within its minimum and maximum voltage specification.

The boost converter design is optimized for driving the integrated Class-D amplifier only. It lacks protection circuitry recommended for driving loads other than the integrated Class-D amplifier.

9.3.3.1 Boost Converter Overvoltage Protection

The TPA2015D1 internal boost converter operates in a discontinuous mode to improve the efficiency at light loads. The boost converter has overvoltage protection that disables the boost converter if the output voltage exceeds 5.8 V. If current is forced into the PVOUT terminal, the voltage clamp will sink up to 10 mA. If more than 10 mA is forced into PVOUT, then the PVOUT voltage will increase. Refer to the *Section 9.3.6* section for details.

See *Section 13.1.1.2* for a list of terms and definitions used in the boost equations.

9.3.4 Operation With DACs and CODECs

Large ripple voltages can be present at the output of ΔΣ DACs and CODECs, just above the audio frequency (for example: 80 kHz with a 300 mV_{PP}). This out-of-band noise is due to the noise shaping of the delta-sigma modulator in the DAC.

Some Class-D amplifiers have higher output noise when used in combination with these DACs and CODECs. This is because out-of-band noise from the CODEC/DAC mixes with the Class-D switching frequencies in the audio amplifier input stage.

The TPA2015D1 has a built-in low-pass filter that reduces the out-of-band noise and RF noise, filtering out-of-band frequencies that could degrade in-band noise performance. The TPA2015D1 AGC calculates gain based on input signal amplitude only.

If driving the TPA2015D1 input with 4th-order or higher ΔΣ DACs or CODECs, add an R-C low pass filter at each of the audio inputs (IN+ and IN-) of the TPA2015D1 to ensure best performance. The recommended resistor value is 100 Ω and the capacitor value of 47 nF.

Copyright © 2022 Texas Instruments Incorporated

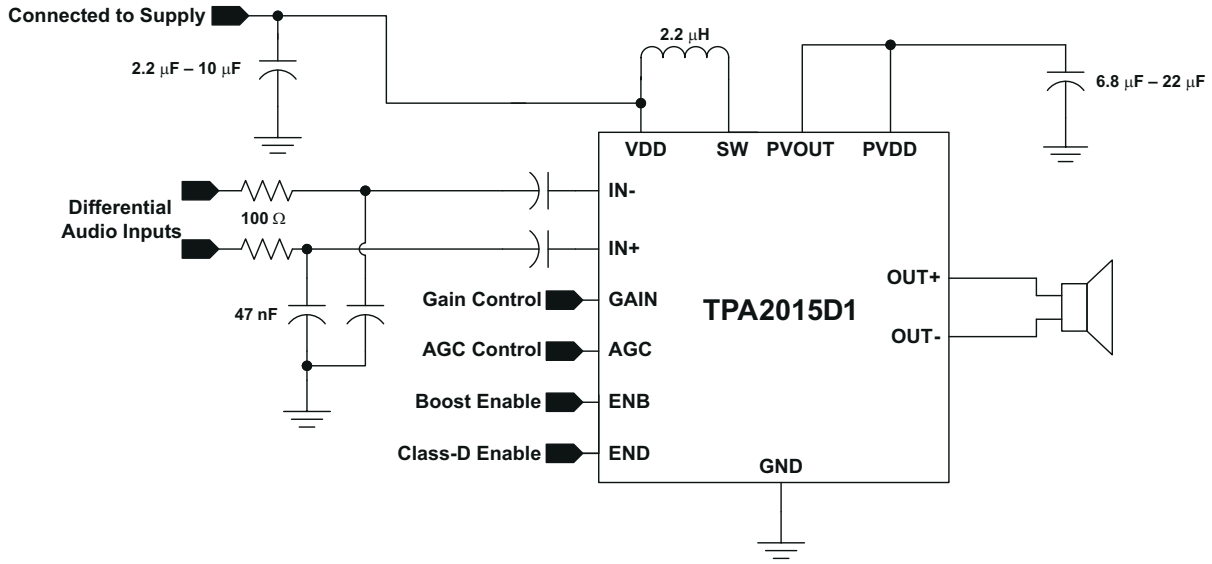

Figure 9-6. Reducing Out-of-Band DAC Noise With External Input Filter

9.3.5 Filter Free Operation and Ferrite Bead Filters

The TPA2015D1 is designed to minimize RF emissions. For more information about RF emissions and filtering requirements, see SLOA145.

9.3.6 Speaker Load Limitation

Speakers are non-linear loads with varying impedance (magnitude and phase) over the audio frequency. A portion of speaker load current can flow back into the boost converter output via the Class-D output H-bridge high-side device. This is dependent on the speaker's phase change over frequency, and the audio signal amplitude and frequency content.

Most portable speakers have limited phase change at the resonant frequency, typically no more than 40 or 50 degrees. To avoid excess flow-back current, use speakers with limited phase change. Otherwise, flow-back current could exceed the 10 mA rating of the boost converter voltage clamp and drive the PVOUT voltage above the absolute maximum recommended operational voltage.

Confirm proper operation by connecting the speaker to the TPA2015D1 and driving it at maximum output swing. Observe the PVOUT voltage with an oscilloscope. In the unlikely event the PVOUT voltage exceeds 6.5 V, add a 6.8 V Zener diode between PVOUT and ground to ensure the TPA2015D1 operates properly.

The amplifier has thermal overload protection and decatives if the die temperature exceeds 150°C. It automatically reactivates once die temperature returns below 150°C. Built-in output over-current protection deactivates the amplifier if the speaker load becomes short-circuited. The amplifier automatically restarts within 200 ms after the over-current event. Although the TPA2015D1 Class-D output can withstand a short between OUT+ and OUT-, do not connect either output directly to GND, PVDD, or VBAT as this could damage the device.

CAUTION

Do not connect OUT+ or OUT- directly to GND, PVDD, or VBAT as this could damage the Class-D output stage.

9.3.7 Fixed Gain Setting

The TPA2015D1 has 3 selectable fixed-gains: 6 dB, 15.5 dB, and 20 dB. Connect the GAIN pin as shown in Table 9-2.

Copyright © 2022 Texas Instruments Incorporated

Table 9-2. Amplifier Fixed-Gain

CONNECT GAIN PIN TO	AMPLIFIER GAIN
GND	6 dB
No Connection (Floating)	15.5 dB
VBAT	20 dB

9.4 Device Functional Modes

9.4.1 Shutdown Mode

The TPA2025D1 can be put in shutdown mode when asserting ENB and END pins to a logic LOW. While in shutdown mode, the device output stage is turned off and the current consumption is very low. The device exits shutdown mode when a HIGH logic level is applied to ENB and END pins.

9.4.2 Battery Tracking SpeakerGuard™ Operation

Phase 1 **Battery discharging normally; supply voltage is above inflection point; audio output remains below limiter level.**

The limiter level remains constant because the supply voltage is greater than the inflection point. Amplifier gain is constant at fixed-gain as set by the GAIN pin. The audio output remains at a constant loudness. The boost converter allows the audio output to swing above the battery supply voltage. Battery supply current increases as supply voltage decreases.

Phase 2 **Battery continues to discharge normally; supply voltage decreases below inflection point; limiter level decreases below audio output.**

The limiter level decreases as the battery supply voltage continues to decrease. SpeakerGuard™ lowers amplifier gain, reducing the audio output below the new limiter level. The supply current decreases due to reduced output power.

Phase 3 **Battery supply voltage is constant; audio output remains below limiter level.**

The audio output, limiter level, and supply current remain constant as well.

Phase 4 **Phone plugged in and battery re-charges; supply voltage increases.**

The limiter level increases as the supply voltage increases. SpeakerGuard™ increases amplifier gain slowly, increasing audio output. Because the TPA2015D1 supply current is proportional to the PVOUT-to-VBAT ratio, the supply current decreases as battery supply voltage increases.

Phase 5 **Battery supply voltage is constant; audio output is below limiter level.**

SpeakerGuard™ continues to increase amplifier gain to the fixed-gain as set by the GAIN pin. The audio output signal increases (slowly due to release time) to original value.

Phase 6 **Battery supply voltage is constant; audio output remains below limiter level.**

Amplifier gain equal to fixed-gain as set by the GAIN pin. Audio output signal does not change. Supply current remains constant.

Copyright © 2022 Texas Instruments Incorporated

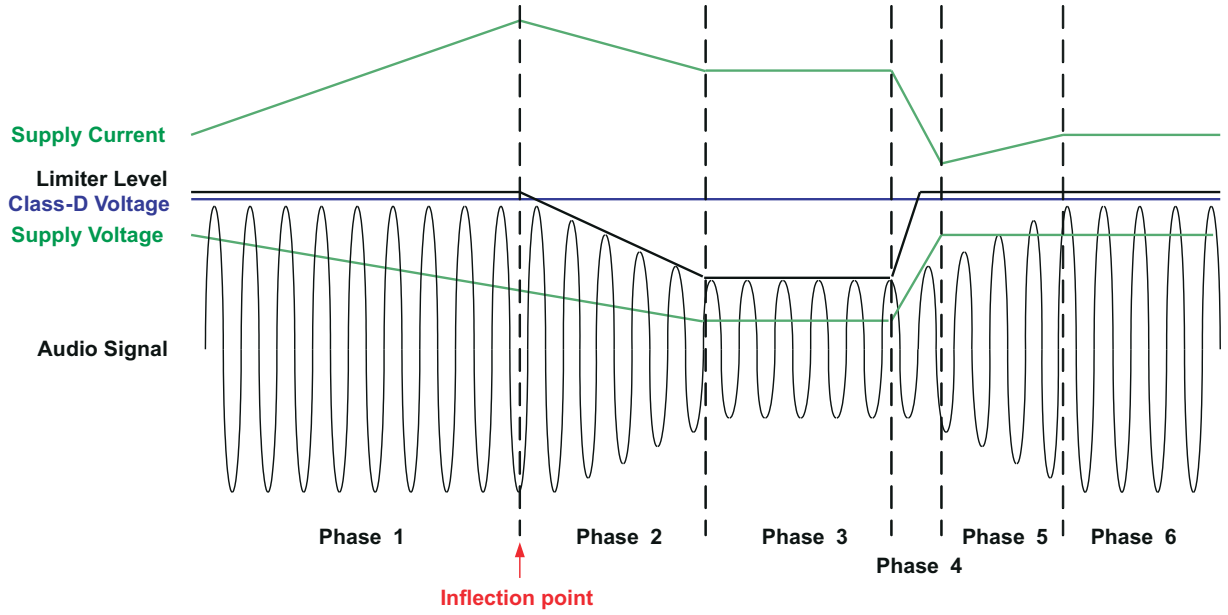

Figure 9-7. Relationship Between Supply Voltage, Current, Limiter Level, and Output Audio Signal

Copyright © 2022 Texas Instruments Incorporated

10 Application and Implementation

Note

Information in the following applications sections is not part of the TI component specification, and TI does not warrant its accuracy or completeness. TI's customers are responsible for determining suitability of components for their purposes. Customers should validate and test their design implementation to confirm system functionality.

10.1 Application Information

These typical connection diagrams highlight the required external components and system level connections for proper operation of the device. Each of these configurations can be realized using the Evaluation Modules (EVMs) for the device. These flexible modules allow full evaluation of the device in the most common modes of operation. Any design variation can be supported by TI through schematic and layout reviews. Visit e2e.ti.com for design assistance and join the audio amplifier discussion forum for additional information.

10.2 Typical Applications

10.2.1 TPA2015D1 With Differential Input Signals

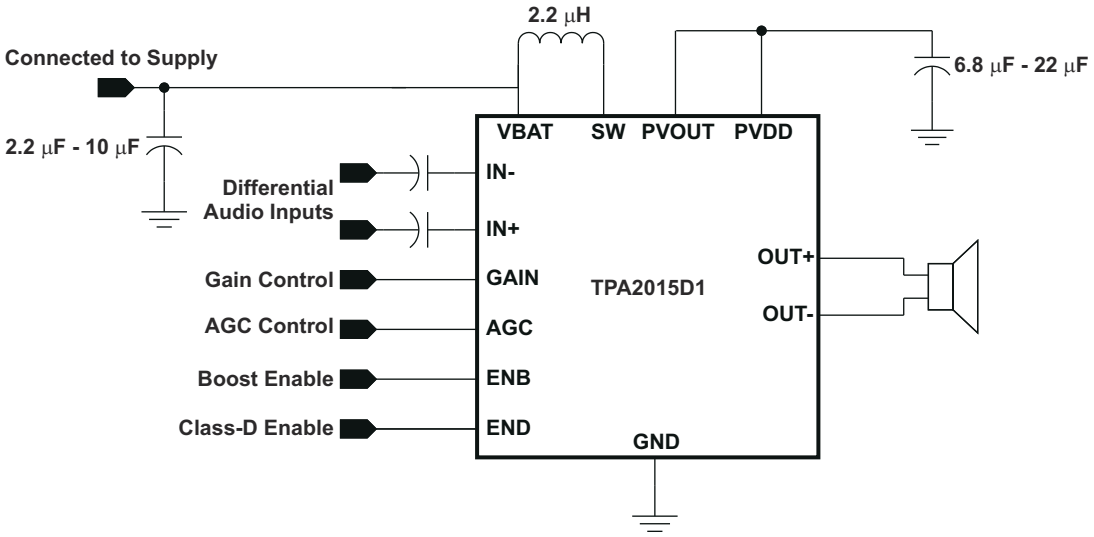

Figure 10-1. Schematic with Differential Input Signals

10.2.1.1 Design Requirements

For this design example, use the parameters listed in Table 10-1.

Table 10-1. Design Parameters

DESIGN PARAMETER	EXAMPLE VALUE
Power Supply	5 V
Enable Inputs	High > 1.3 V
	Low < 0.6 V
Speaker	8 Ω

10.2.1.2 Detailed Design Procedure

10.2.1.2.1 Boost Converter Inductor Selection

Working inductance decreases as inductor current and temperature increases. If the drop in working inductance is severe enough, it may cause the boost converter to become unstable, or cause the TPA2015D1 to reach its current limit at a lower output voltage than expected. Inductor vendors specify currents at which inductor values

Copyright © 2022 Texas Instruments Incorporated

decrease by a specific percentage. This can vary by 10% to 35%. Inductance is also affected by dc current and temperature.

10.2.1.2.1.1 Inductor Equations

Inductor current rating is determined by the requirements of the load. The inductance is determined by two factors: the minimum value required for stability and the maximum ripple current permitted in the application.

Use Equation 1 to determine the required current rating. Equation 1 shows the approximate relationship between the average inductor current, I_L, to the load current, load voltage, and input voltage (I_{PVDD}, PVDD, and VBAT, respectively). Insert I_{PVDD}, PVDD, and VBAT into Equation 1 and solve for I_L. The inductor must maintain at least 90% of its initial inductance value at this current.

$$I_L = I_{PVDD} \times \left(\frac{PVDD}{VBAT \times 0.8} \right) \quad (1)$$

CAUTION

Use a minimum working inductance of 1.3 µH. Lower values may damage the inductor.

Use a minimum working inductance of 1.3 µH. Lower values may damage the inductor.

Ripple current, ΔI_L, is peak-to-peak variation in inductor current. Smaller ripple current reduces core losses in the inductor and reduces the potential for EMI. Use Equation 2 to determine the value of the inductor, L. Equation 2 shows the relationship between inductance L, VBAT, PVDD, the switching frequency, f_{BOOST}, and ΔI_L. Insert the maximum acceptable ripple current into Equation 2 and solve for L.

$$L = \frac{VBAT \times (PVDD - VBAT)}{\Delta I_L \times f_{BOOST} \times PVDD} \quad (2)$$

ΔI_L is inversely proportional to L. Minimize ΔI_L as much as is necessary for a specific application. Increase the inductance to reduce the ripple current. Do not use greater than 4.7 µH, as this prevents the boost converter from responding to fast output current changes properly. If using above 3.3 µH, then use at least 10 µF capacitance on PVOUT to ensure boost converter stability.

The typical inductor value range for the TPA2015D1 is 2.2 µH to 3.3 µH. Select an inductor with less than 0.5 Ω dc resistance, DCR. Higher DCR reduces total efficiency due to an increase in voltage drop across the inductor.

Table 10-2. Sample Inductors

L (µH)	SUPPLIER	COMPONENT CODE	SIZE (L×W×H mm)	DCR TYP (mΩ)	I_{SAT} MAX (A)	C RANGE
2.2	Chilisin Electronics Corp.	CLCN252012T-2R2M-N	2.5 x 2.0 x 1.2	105	1.2	4.7 – 22 µF / 16 V 6.8 – 22 µF / 10 V
2.2	Toko	1239AS-H-2R2N=P2	2.5 × 2.0 × 1.2	96	2.3	
2.2	Coilcraft	XFL4020-222MEC	4.0 x 4.0 x 2.15	22	3.5	
3.3	Toko	1239AS-H-3R3N=P2	2.5 × 2.0 × 1.2	160	2.0	10 – 22 µF / 10 V
3.3	Coilcraft	XFL4020-332MEC	4.0 x 4.0 x 2.15	35	2.8	

10.2.1.2.2 Boost Converter Capacitor Selection

The value of the boost capacitor is determined by the minimum value of working capacitance required for stability and the maximum voltage ripple allowed on PVDD in the application. Working capacitance refers to the available capacitance after derating the capacitor value for DC bias, temperature, and aging.

Do not use any component with a working capacitance less than 4.7 µF. This corresponds to a 4.7 µF / 16 V capacitor, or a 6.8 µF / 10 V capacitor. Do not use above 22 µF capacitance as it will reduce the boost converter response time to large output current transients.

Copyright © 2022 Texas Instruments Incorporated

Equation 3 shows the relationship between the boost capacitance, C, to load current, load voltage, ripple voltage, input voltage, and switching frequency (I_{PVDD}, PVDD, ΔV, VBAT, and f_{BOOST} respectively).

Insert the maximum allowed ripple voltage into Equation 3 and solve for C. The 1.5 multiplier accounts for capacitance loss due to applied dc voltage and temperature for X5R and X7R ceramic capacitors.

$$C = 1.5 \times \frac{I_{PVDD} \times (PVDD - VBAT)}{\Delta V \times f_{BOOST} \times PVDD} \quad (3)$$

10.2.1.2.3 Components Location and Selection

10.2.1.2.3.1 Decoupling Capacitors

The TPA2015D1 is a high-performance Class-D audio amplifier that requires adequate power supply decoupling. Adequate power supply decoupling to ensures that the efficiency is high and total harmonic distortion (THD) is low.

Place a low equivalent-series-resistance (ESR) ceramic capacitor, typically 0.1 µF, within 2 mm of the VBAT ball. This choice of capacitor and placement helps with higher frequency transients, spikes, or digital hash on the line. Additionally, placing this decoupling capacitor close to the TPA2015D1 is important, as any parasitic resistance or inductance between the device and the capacitor causes efficiency loss. In addition to the 0.1 µF ceramic capacitor, place a 2.2 µF to 10 µF capacitor on the VBAT supply trace. This larger capacitor acts as a charge reservoir, providing energy faster than the board supply, thus helping to prevent any droop in the supply voltage.

10.2.1.2.3.2 Input Capacitors

Input audio DC decoupling capacitors are recommended. The input audio DC decoupling capacitors prevents the AGC from changing the gain due to audio DAC output offset. The input capacitors and TPA2015D1 input impedance form a high-pass filter with the corner frequency, f_C, determined in Equation 4.

Any mismatch in capacitance between the two inputs will cause a mismatch in the corner frequencies. Severe mismatch may also cause turn-on pop noise. Choose capacitors with a tolerance of ±10% or better.

$$f_c = \frac{1}{(2 \times \pi \times R_I C_I)} \quad (4)$$

10.2.1.3 Application Curves

For application curves, see the figures listed in Table 10-3.

Table 10-3. Table of Graphs

DESCRIPTION	FIGURE NUMBER
Supply Current vs Output Power	Figure 7-3
Peak Output Voltage vs Peak Input Voltage	Figure 7-4
Total Efficiency vs Output Power	Figure 7-5
Output Power vs Supply Voltage	Figure 7-9

Copyright © 2022 Texas Instruments Incorporated

10.2.2 TPA2015D1 with Single-Ended Input Signals

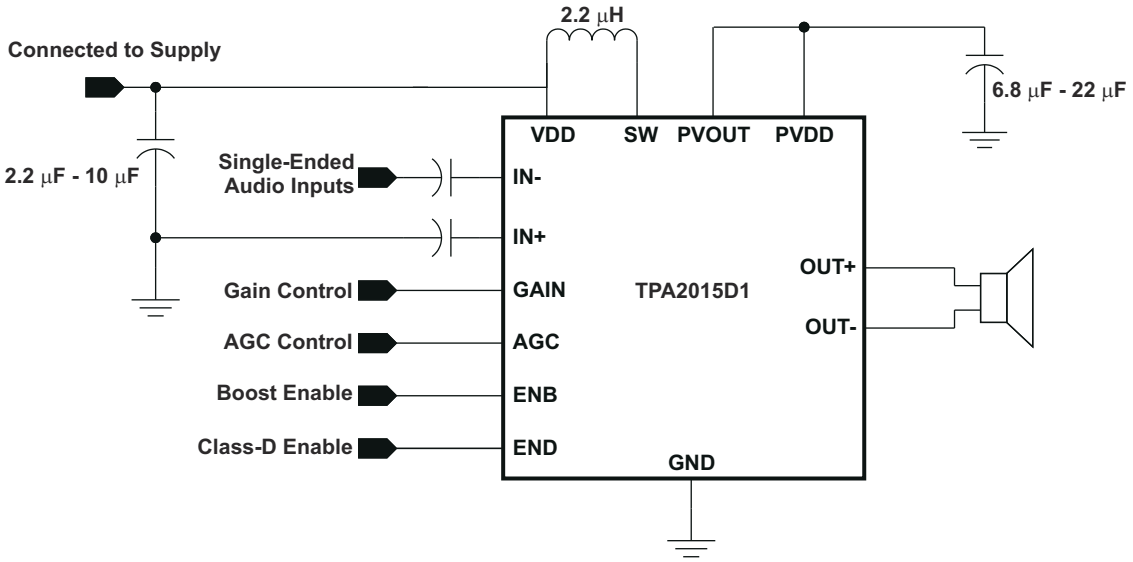

Figure 10-2. Typical Application Schematic with Single-Ended Input Signals

10.2.2.1 Design Requirements

For this design example, use the parameters listed in Table 10-1.

10.2.2.2 Detailed Design Procedure

For the design procedure see *Section 10.2.1.2* from the previous section.

10.2.2.3 Application Curves

For application curves, see the figures listed in Table 10-3.

Copyright © 2022 Texas Instruments Incorporated

11 Power Supply Recommendations

The TPA2015D1 is designed to operate from an input voltage supply range between 2.5-V and 5.2-V. Therefore the output voltage range of the power supply should be within this range. The current capability of upper power should not exceed the maximum current limit of the power switch.

11.1 Power Supply Decoupling Capacitors

The TPA2015D1 requires adequate power supply decoupling to ensure a high efficiency operation with low total harmonic distortion (THD). Place a low equivalent-series-resistance (ESR) ceramic capacitor, typically 0.1 µF, within 2 mm of the PVDD/PVOUT pin. This choice of capacitor and placement helps with higher frequency transients, spikes, or digital hash on the line. In addition to the 0.1 µF ceramic capacitor, is recommended to place a 2.2 µF to 10 µF capacitor on the VDD supply trace. This larger capacitor acts as a charge reservoir, providing energy faster than the board supply, thus helping to prevent any droop in the supply voltage.

Copyright © 2022 Texas Instruments Incorporated

12 Layout

12.1 Layout Guidelines

12.1.1 Component Placement

Place all the external components close to the TPA2015D1 device. Placing the decoupling capacitors as close as possible to the device is important for the efficiency of the class-D amplifier. Any resistance or inductance in the trace between the device and the capacitor can cause a loss in efficiency.

12.1.2 Trace Width

Recommended trace width at the solder balls is 75 µm to 100 µm to prevent solder wicking onto wider PCB traces. For high current pins (SW, GND, OUT+, OUT–, PVOUT, and PVDD) of the TPA2015D1, use 100 µm trace widths at the solder balls and at least 500 µm PCB traces to ensure proper performance and output power for the device. For low current pins (IN–, IN+, END, ENB, GAIN, AGC, VBAT) of the TPA2015D1, use 75 µm to 100 µm trace widths at the solder balls. Run IN- and IN+ traces side-by-side (and if possible, same length) to maximize common-mode noise cancellation.

12.1.3 Pad Size

In making the pad size for the DSBGA balls, TI recommends that the layout use nonsolder mask defined (NSMD) land.

With this method, the solder mask opening is made larger than the desired land area, and the opening size is defined by the copper pad width. Figure 12-1 and Table 12-1 show the appropriate diameters for a DSBGA layout.

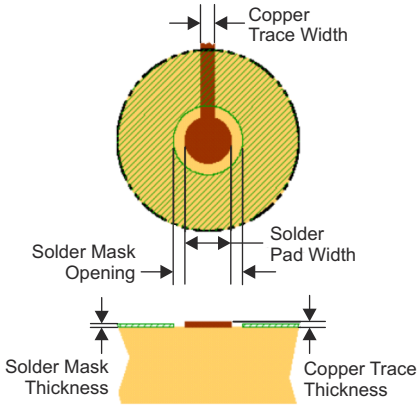

Figure 12-1. Land Pattern Dimensions

Table 12-1. Land Pattern Dimensions(1) (3) (2) (4)

SOLDER PAD DEFINITIONS	COPPER PAD	SOLDER MASK (5) OPENING	COPPER THICKNESS	STENCIL (6) (7) OPENING	STENCIL THICKNESS
Nonsolder mask defined (NSMD)	275 µm (+0.0, -25 µm)	375 µm (+0.0, -25 µm)	1 oz max (32 µm)	275 µm x 275 µm Sq. (rounded corners)	125 µm thick

(1) Circuit traces from NSMD defined PWB lands should be 75 µm to 100 µm wide in the exposed area inside the solder mask opening. Wider trace widths reduce device stand off and impact reliability.
(2) Recommend solder paste is Type 3 or Type 4.
(3) Best reliability results are achieved when the PWB laminate glass transition temperature is above the operating the range of the intended application.
(4) For a PWB using a Ni/Au surface finish, the gold thickness should be less 0.5 mm to avoid a reduction in thermal fatigue performance.
(5) Solder mask thickness should be less than 20 µm on top of the copper circuit pattern
(6) Best solder stencil performance is achieved using laser cut stencils with electro polishing. Use of chemically etched stencils results in inferior solder paste volume control.
(7) Trace routing away from DSBGA device should be balanced in X and Y directions to avoid unintentional component movement due to solder wetting forces.

Copyright © 2022 Texas Instruments Incorporated

12.2 Layout Example

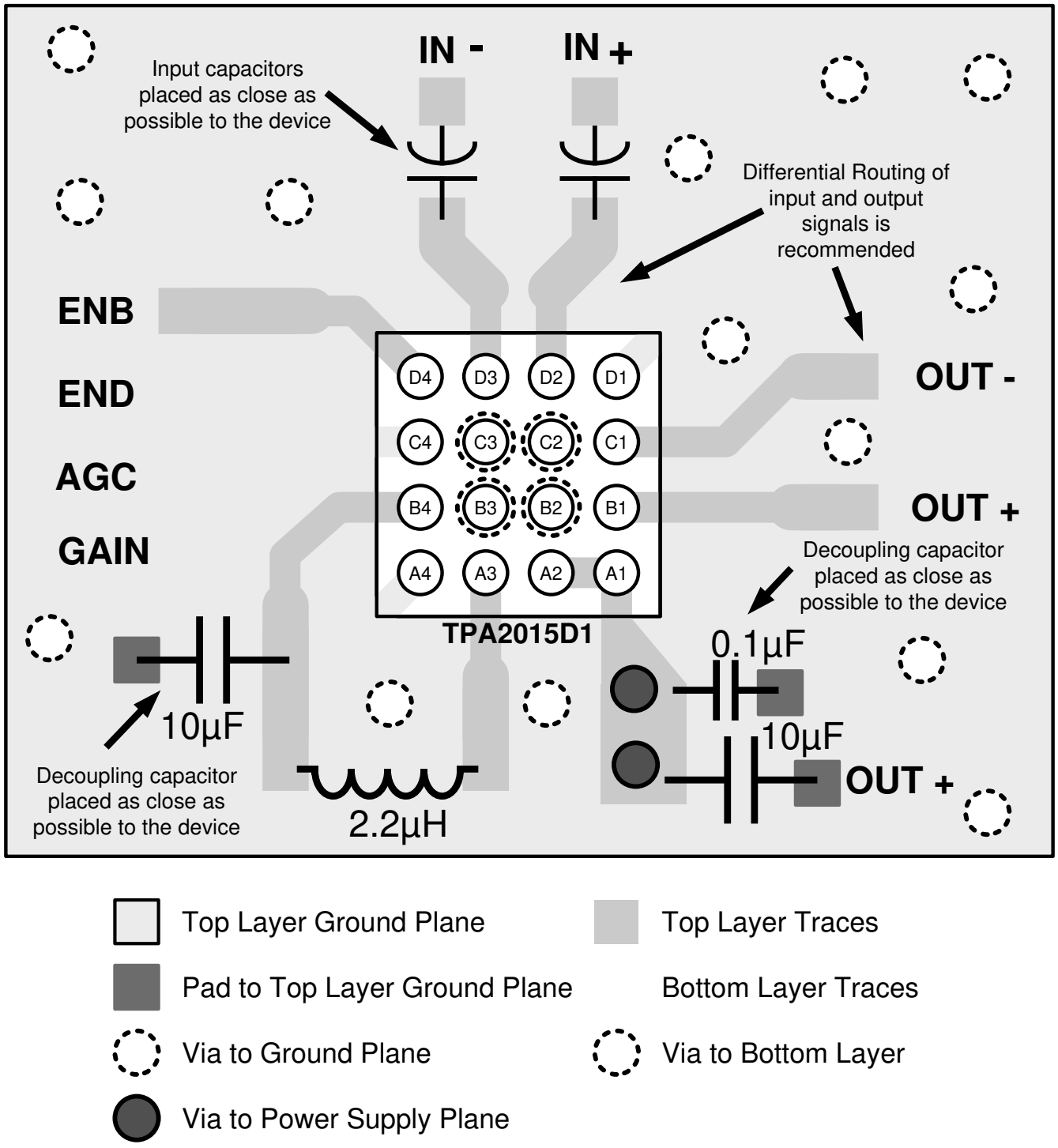

Figure 12-2. TPA2015D1 Layout Example

Copyright © 2022 Texas Instruments Incorporated

13 Device and Documentation Support

13.1 Device Support

13.1.1 Device Nomenclature

13.1.1.1 TPA2015D1 Glossary

Limiter level	The maximum output voltage allowed before amplifier gain is automatically reduced.
SpeakerGuard™	TI's trademark name for the automatic gain control technology. It protects speakers by limiting maximum output power.
Inflection point	The battery voltage threshold for reducing the limiter level. If the battery voltage drops below the inflection point, the limiter level automatically reduces. Although it lowers the maximum output power, it prevents high battery currents at end-of-charge low battery voltages.
Battery track	The name for the continuous limiter level reduction at battery voltages below the inflection point.
AGC	Automatic gain control.
VBAT	The battery supply voltage to the TPA2015D1. The VBAT pin is the input to the boost converter.
Fixed-gain	The nominal audio gain as set by the GAIN pin. If the audio output voltage remains below the limiter level, the amplifier gain will return to the fixed-gain.
Attack time	The rate of AGC gain decrease. The attack time is constant at 0.026 ms/dB.
Release time	The rate of AGC gain increase. The release time is constant at 1600 ms/dB.

13.1.1.2 Boost Terms

C	Minimum boost capacitance required for a given ripple voltage on PVOUT.
L	Boost inductor.
f_{BOOST}	Switching frequency of the boost converter.
I_{PVDD}	Current pulled by the Class-D amplifier from the boost converter.
I_L	Average current through the boost inductor.
PVDD (PVOUT)	Supply voltage for the Class-D amplifier. (Voltage generated by the boost converter output.)
VBAT	Supply voltage to the IC.
ΔI_L	Ripple current through the inductor.
ΔV	Ripple voltage on PVOUT.

Copyright © 2022 Texas Instruments Incorporated

13.2 Community Resources

13.3 Trademarks

SpeakerGuard™ is a trademark of Texas Instruments.
All trademarks are the property of their respective owners.

Copyright © 2022 Texas Instruments Incorporated

14 Mechanical, Packaging, and Orderable Information

The following pages include mechanical, packaging, and orderable information. This information is the most current data available for the designated devices. This data is subject to change without notice and revision of this document. For browser-based versions of this data sheet, refer to the left-hand navigation.

Copyright © 2022 Texas Instruments Incorporated

14.1 Package Option Addendum

Copyright © 2022 Texas Instruments Incorporated

14.1.1 Packaging Information

Orderable Device	Status (1)	Package Type	Package Drawing	Pins	Package Qty	Eco Plan (2)	Lead/Ball Finish(4)	MSL Peak Temp (3)	Op Temp (°C)	Device Marking(5) (6)
SN012020YZHR	ACTIVE	DSBGA	YZH	16	3000	Green (RoHS & no Sb/Br)	SNAGCU	Level-1-260C-UNLIM	–40 to 85	1D8
SN012020YZHT	ACTIVE	DSBGA	YZH	16	250	Green (RoHS & no Sb/Br)	SNAGCU	Level-1-260C-UNLIM	–40 to 85	1D8

(1) The marketing status values are defined as follows:
ACTIVE: Product device recommended for new designs.
LIFEBUY: TI has announced that the device will be discontinued, and a lifetime-buy period is in effect.
NRND: Not recommended for new designs. Device is in production to support existing customers, but TI does not recommend using this part in a new design.
PRE_PROD Unannounced device, not in production, not available for mass market, nor on the web, samples not available.
PREVIEW: Device has been announced but is not in production. Samples may or may not be available.
OBSOLETE: TI has discontinued the production of the device.

(2) Eco Plan - The planned eco-friendly classification: Pb-Free (RoHS), Pb-Free (RoHS Exempt), or Green (RoHS & no Sb/Br) - please check http://www.ti.com/productcontent for the latest availability information and additional product content details.
TBD: The Pb-Free/Green conversion plan has not been defined.
Pb-Free (RoHS): TI's terms "Lead-Free" or "Pb-Free" mean semiconductor products that are compatible with the current RoHS requirements for all 6 substances, including the requirement that lead not exceed 0.1% by weight in homogeneous materials. Where designed to be soldered at high temperatures, TI Pb-Free products are suitable for use in specified lead-free processes.
Pb-Free (RoHS Exempt): This component has a RoHS exemption for either 1) lead-based flip-chip solder bumps used between the die and package, or 2) lead-based die adhesive used between the die and leadframe. The component is otherwise considered Pb-Free (RoHS compatible) as defined above.
Green (RoHS & no Sb/Br): TI defines "Green" to mean Pb-Free (RoHS compatible), and free of Bromine (Br) and Antimony (Sb) based flame retardants (Br or Sb do not exceed 0.1% by weight in homogeneous material)

(3) MSL, Peak Temp. -- The Moisture Sensitivity Level rating according to the JEDEC industry standard classifications, and peak solder temperature.

(4) Lead/Ball Finish - Orderable Devices may have multiple material finish options. Finish options are separated by a vertical ruled line. Lead/Ball Finish values may wrap to two lines if the finish value exceeds the maximum column width.

(5) There may be additional marking, which relates to the logo, the lot trace code information, or the environmental category on the device

(6) Multiple Device markings will be inside parentheses. Only one Device Marking contained in parentheses and separated by a "~" will appear on a device. If a line is indented then it is a continuation of the previous line and the two combined represent the entire Device Marking for that device.

Important Information and Disclaimer: The information provided on this page represents TI's knowledge and belief as of the date that it is provided. TI bases its knowledge and belief on information provided by third parties, and makes no representation or warranty as to the accuracy of such information. Efforts are underway to better integrate information from third parties. TI has taken and continues to take reasonable steps to provide representative and accurate information but may not have conducted destructive testing or chemical analysis on incoming materials and chemicals. TI and TI suppliers consider certain information to be proprietary, and thus CAS numbers and other limited information may not be available for release.

In no event shall TI's liability arising out of such information exceed the total purchase price of the TI part(s) at issue in this document sold by TI to Customer on an annual basis.

Copyright © 2022 Texas Instruments Incorporated

14.1.2 Tape and Reel Information

REEL DIMENSIONS

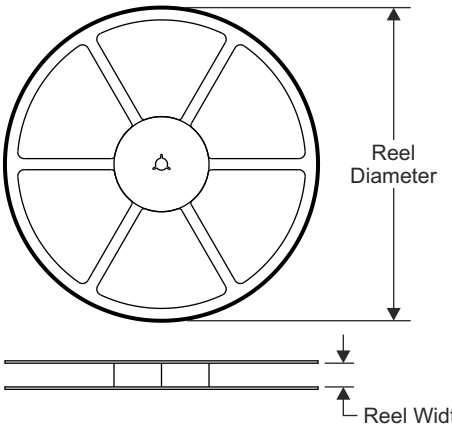

TAPE DIMENSIONS

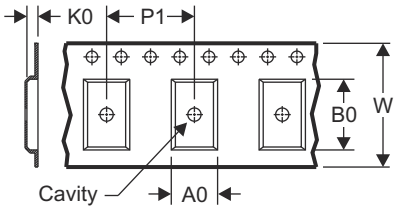

A0	Dimension designed to accommodate the component width
B0	Dimension designed to accommodate the component length
K0	Dimension designed to accommodate the component thickness
W	Overall width of the carrier tape
P1	Pitch between successive cavity centers

QUADRANT ASSIGNMENTS FOR PIN 1 ORIENTATION IN TAPE

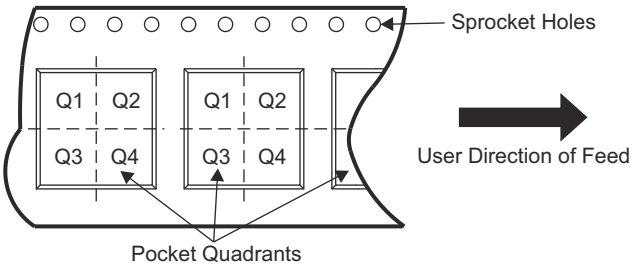

Device	Package Type	Package Drawing	Pins	SPQ	Reel Diameter (mm)	Reel Width W1 (mm)	A0 (mm)	B0 (mm)	K0 (mm)	P1 (mm)	W (mm)	Pin1 Quadrant
SN012020YZHR	DSBGA	YZH	16	3000	180.0	8.4	2.07	2.07	0.81	4.0	8.0	Q1
SN012020YZHT	DSBGA	YZH	16	250	180.0	8.4	2.07	2.07	0.81	4.0	8.0	Q1

Copyright © 2022 Texas Instruments Incorporated

TAPE AND REEL BOX DIMENSIONS

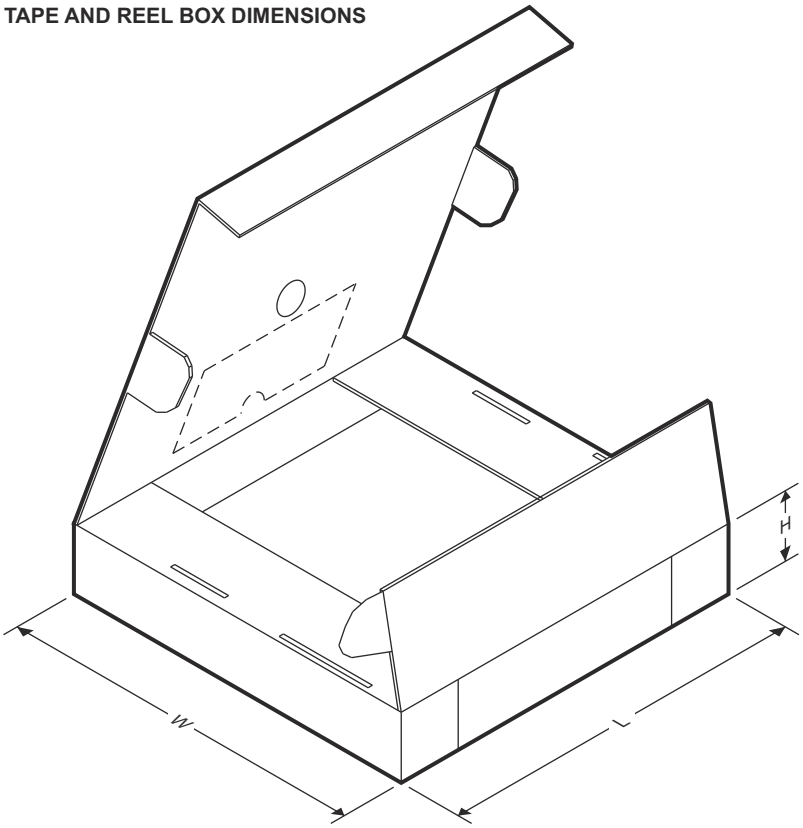

Device	Package Type	Package Drawing	Pins	SPQ	Length (mm)	Width (mm)	Height (mm)
SN012020YZHR	DSBGA	YZH	16	3000	182.0	182.0	20.0
SN012020YZHT	DSBGA	YZH	16	250	182.0	182.0	20.0

Copyright © 2022 Texas Instruments Incorporated

PACKAGING INFORMATION

Orderable Device	Status (1)	Package Type	Package Drawing	Pins	Package Qty	Eco Plan (2)	Lead finish/ Ball material (6)	MSL Peak Temp (3)	Op Temp (°C)	Device Marking (4/5)	Samples
SN012020YZHR	ACTIVE	DSBGA	YZH	16	3000	RoHS & Green	SNAGCU	Level-1-260C-UNLIM	-40 to 85	1D8	Samples
TPA2015D1YZHR	ACTIVE	DSBGA	YZH	16	3000	RoHS & Green	SNAGCU	Level-1-260C-UNLIM	-40 to 85	OEN	Samples
TPA2015D1YZHT	ACTIVE	DSBGA	YZH	16	250	RoHS & Green	SNAGCU	Level-1-260C-UNLIM	-40 to 85	OEN	Samples

(1) The marketing status values are defined as follows:
ACTIVE: Product device recommended for new designs.
LIFEBUY: TI has announced that the device will be discontinued, and a lifetime-buy period is in effect.
NRND: Not recommended for new designs. Device is in production to support existing customers, but TI does not recommend using this part in a new design.
PREVIEW: Device has been announced but is not in production. Samples may or may not be available.
OBSOLETE: TI has discontinued the production of the device.

(2) **RoHS:** TI defines "RoHS" to mean semiconductor products that are compliant with the current EU RoHS requirements for all 10 RoHS substances, including the requirement that RoHS substance do not exceed 0.1% by weight in homogeneous materials. Where designed to be soldered at high temperatures, "RoHS" products are suitable for use in specified lead-free processes. TI may reference these types of products as "Pb-Free".
RoHS Exempt: TI defines "RoHS Exempt" to mean products that contain lead but are compliant with EU RoHS pursuant to a specific EU RoHS exemption.
Green: TI defines "Green" to mean the content of Chlorine (Cl) and Bromine (Br) based flame retardants meet JS709B low halogen requirements of <=1000ppm threshold. Antimony trioxide based flame retardants must also meet the <=1000ppm threshold requirement.

(3) MSL, Peak Temp. - The Moisture Sensitivity Level rating according to the JEDEC industry standard classifications, and peak solder temperature.

(4) There may be additional marking, which relates to the logo, the lot trace code information, or the environmental category on the device.

(5) Multiple Device Markings will be inside parentheses. Only one Device Marking contained in parentheses and separated by a "~" will appear on a device. If a line is indented then it is a continuation of the previous line and the two combined represent the entire Device Marking for that device.

(6) Lead finish/Ball material - Orderable Devices may have multiple material finish options. Finish options are separated by a vertical ruled line. Lead finish/Ball material values may wrap to two lines if the finish value exceeds the maximum column width.

Important Information and Disclaimer: The information provided on this page represents TI's knowledge and belief as of the date that it is provided. TI bases its knowledge and belief on information provided by third parties, and makes no representation or warranty as to the accuracy of such information. Efforts are underway to better integrate information from third parties. TI has taken and continues to take reasonable steps to provide representative and accurate information but may not have conducted destructive testing or chemical analysis on incoming materials and chemicals. TI and TI suppliers consider certain information to be proprietary, and thus CAS numbers and other limited information may not be available for release.

In no event shall TI's liability arising out of such information exceed the total purchase price of the TI part(s) at issue in this document sold by TI to Customer on an annual basis.

TAPE AND REEL INFORMATION

REEL DIMENSIONS

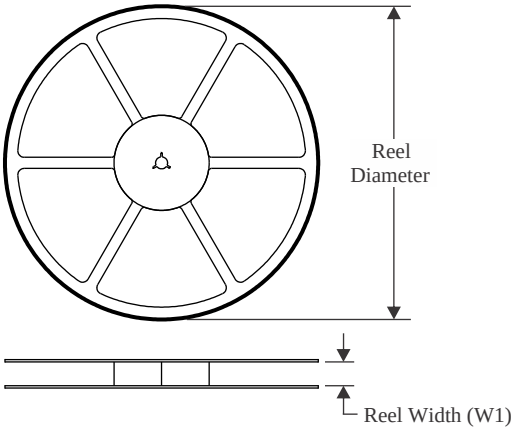

TAPE DIMENSIONS

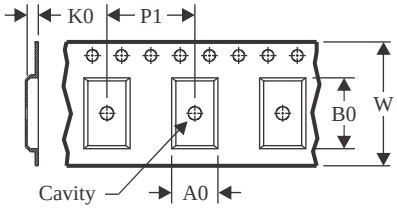

A0	Dimension designed to accommodate the component width
B0	Dimension designed to accommodate the component length
K0	Dimension designed to accommodate the component thickness
W	Overall width of the carrier tape
P1	Pitch between successive cavity centers

QUADRANT ASSIGNMENTS FOR PIN 1 ORIENTATION IN TAPE

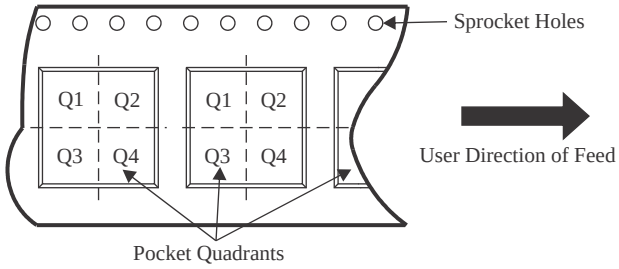

*All dimensions are nominal

Device	Package Type	Package Drawing	Pins	SPQ	Reel Diameter (mm)	Reel Width W1 (mm)	A0 (mm)	B0 (mm)	K0 (mm)	P1 (mm)	W (mm)	Pin1 Quadrant
SN012020YZHR	DSBGA	YZH	16	3000	180.0	8.4	2.07	2.07	0.81	4.0	8.0	Q1
TPA2015D1YZHR	DSBGA	YZH	16	3000	180.0	8.4	2.07	2.07	0.81	4.0	8.0	Q1
TPA2015D1YZHT	DSBGA	YZH	16	250	180.0	8.4	2.07	2.07	0.81	4.0	8.0	Q1

TAPE AND REEL BOX DIMENSIONS

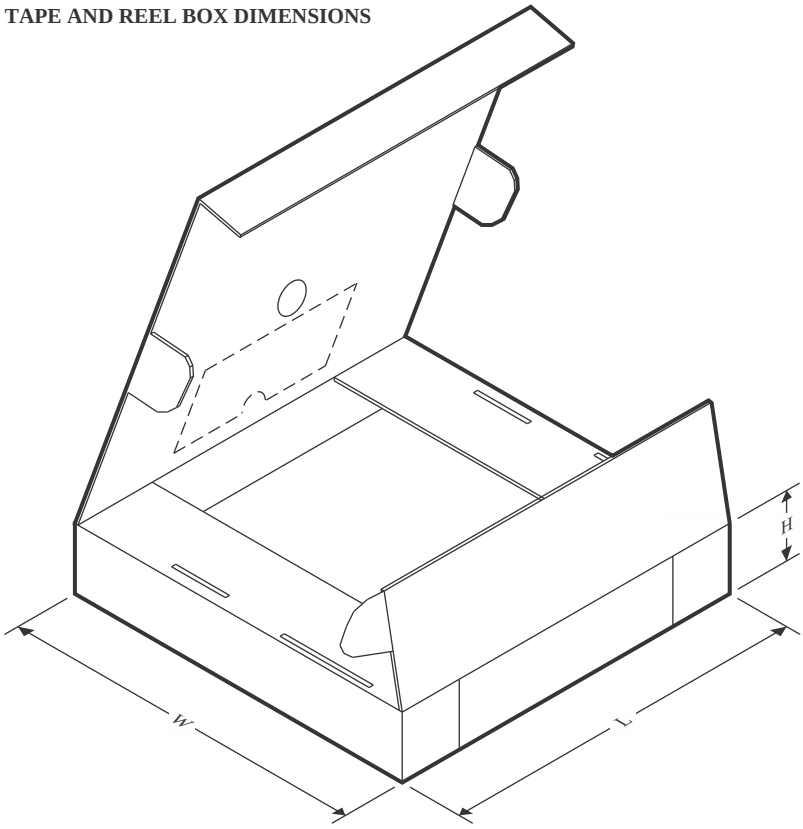

*All dimensions are nominal

Device	Package Type	Package Drawing	Pins	SPQ	Length (mm)	Width (mm)	Height (mm)
SN012020YZHR	DSBGA	YZH	16	3000	182.0	182.0	20.0
TPA2015D1YZHR	DSBGA	YZH	16	3000	182.0	182.0	20.0
TPA2015D1YZHT	DSBGA	YZH	16	250	182.0	182.0	20.0

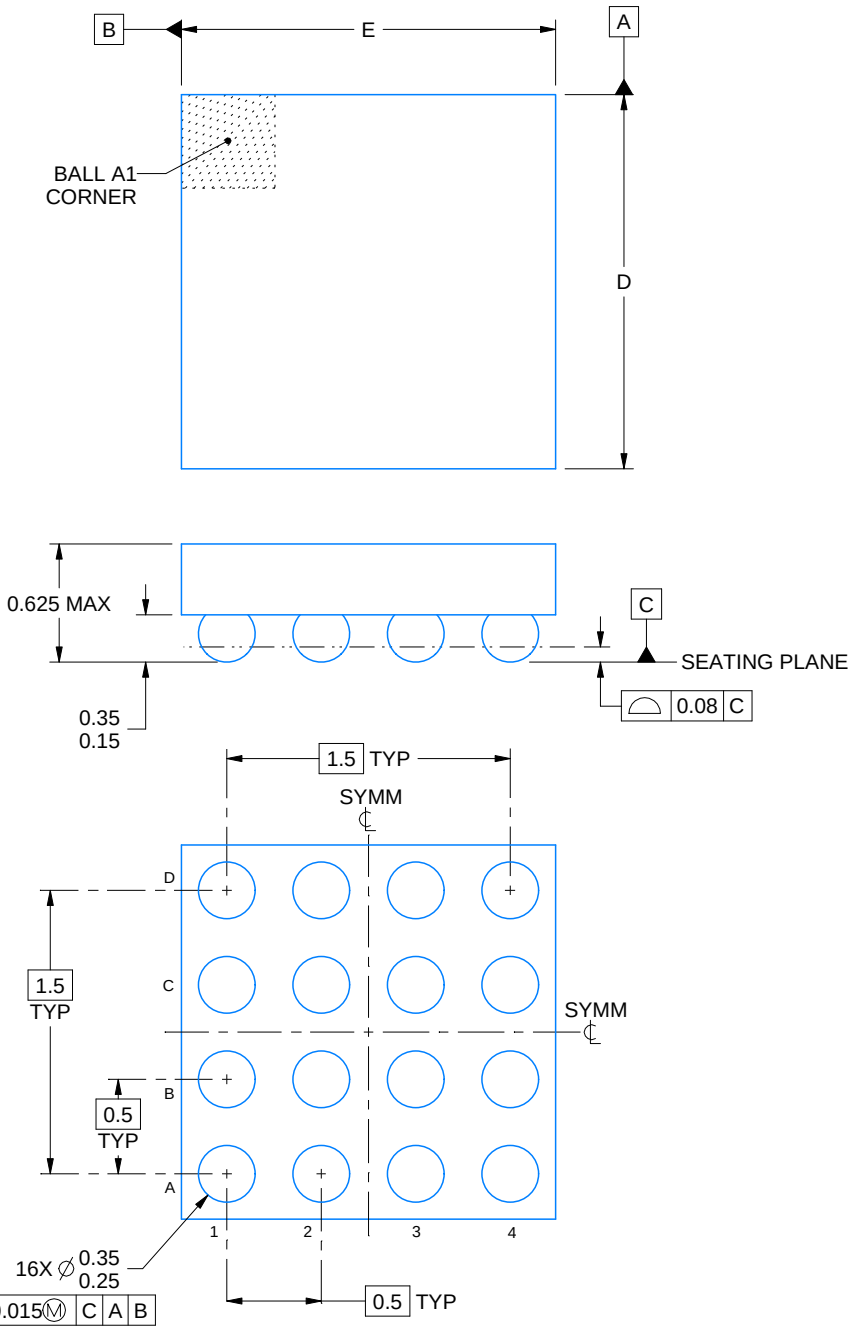

4226617/A 03/2021

NOTES:

1. All linear dimensions are in millimeters. Any dimensions in parenthesis are for reference only. Dimensioning and tolerancing per ASME Y14.5M.
2. This drawing is subject to change without notice.

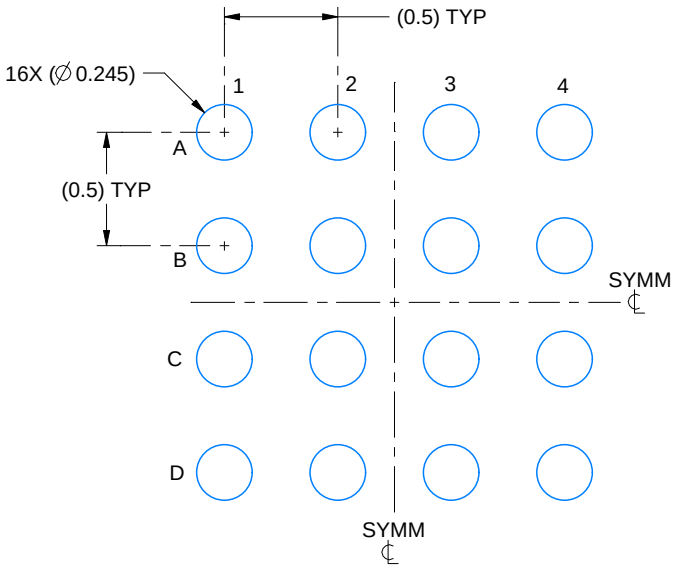

LAND PATTERN EXAMPLE
EXPOSED METAL SHOWN
SCALE: 30X

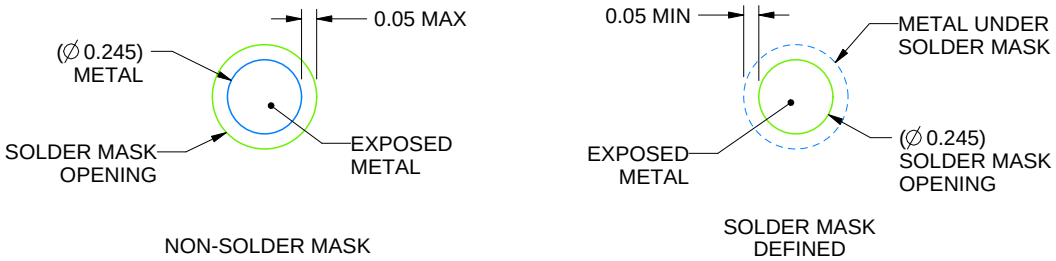

SOLDER MASK DETAILS
NOT TO SCALE

4226617/A 03/2021

NOTES: (continued)

3. Final dimensions may vary due to manufacturing tolerance considerations and also routing constraints.
   See Texas Instruments Literature No. SNVA009 (www.ti.com/lit/snva009).

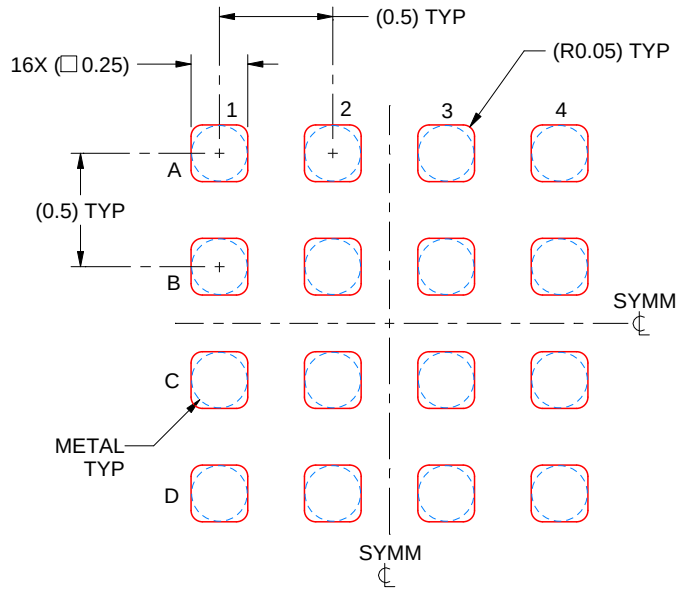

SOLDER PASTE EXAMPLE
BASED ON 0.075 mm THICK STENCIL
SCALE: 30X

4226617/A 03/2021

NOTES: (continued)

4. Laser cutting apertures with trapezoidal walls and rounded corners may offer better paste release.

IMPORTANT NOTICE AND DISCLAIMER

TI PROVIDES TECHNICAL AND RELIABILITY DATA (INCLUDING DATA SHEETS), DESIGN RESOURCES (INCLUDING REFERENCE DESIGNS), APPLICATION OR OTHER DESIGN ADVICE, WEB TOOLS, SAFETY INFORMATION, AND OTHER RESOURCES “AS IS” AND WITH ALL FAULTS, AND DISCLAIMS ALL WARRANTIES, EXPRESS AND IMPLIED, INCLUDING WITHOUT LIMITATION ANY IMPLIED WARRANTIES OF MERCHANTABILITY, FITNESS FOR A PARTICULAR PURPOSE OR NON-INFRINGEMENT OF THIRD PARTY INTELLECTUAL PROPERTY RIGHTS.

These resources are intended for skilled developers designing with TI products. You are solely responsible for (1) selecting the appropriate TI products for your application, (2) designing, validating and testing your application, and (3) ensuring your application meets applicable standards, and any other safety, security, regulatory or other requirements.

These resources are subject to change without notice. TI grants you permission to use these resources only for development of an application that uses the TI products described in the resource. Other reproduction and display of these resources is prohibited. No license is granted to any other TI intellectual property right or to any third party intellectual property right. TI disclaims responsibility for, and you will fully indemnify TI and its representatives against, any claims, damages, costs, losses, and liabilities arising out of your use of these resources.

TI’s products are provided subject to TI’s Terms of Sale or other applicable terms available either on ti.com or provided in conjunction with such TI products. TI’s provision of these resources does not expand or otherwise alter TI’s applicable warranties or warranty disclaimers for TI products.

TI objects to and rejects any additional or different terms you may have proposed.

Mailing Address: Texas Instruments, Post Office Box 655303, Dallas, Texas 75265
Copyright © 2022, Texas Instruments Incorporated