TPA2012D2 Audio Power Amplifier Evaluation Module

The TPA2012D2 audio power amplifier evaluation module is a complete, low-power, Class-D, stereo audio power amplifier capable of delivering 1.2 W/channel (YZH package). All components and the evaluation module are Pb-Free.

Contents

1 Introduction 1
2 Operation 2
3 Reference 3
4 Related Documentation From Texas Instruments 6

List of Figures

1 TPA2012D2 Output Power 2
2 Top Layer 4
3 Bottom Layer 4
4 TPA2012D2 EVM Schematic Diagram 5

List of Tables

1 Gain Settings 3
2 TPA2012D2 EVM Parts List 6

1 Introduction

This section provides an overview of the Texas Instruments (TI) TPA2012D2 NanoFree™ WCSP audio amplifier evaluation module (TPA2012D2 EVM). It includes a brief description of the module and a list of EVM specifications.

1.1 TPA2012D2 EVM Specifications

Supply voltage range, V_{DD}	2.5 V to 5.5 V
Power supply current rating required	2.5 A
Continuous output power, P_O: 4-Ω BTL, V_{DD} = 5 V	1.2 W (see note)
Audio input voltage, V_I	0 V to V_{DD}
Minimum load impedance, Z_L	4 Ω

Note:
The TPA2012D2 in the RTJ package (QFN) is rated at 2.1 W/channel. The YZH package (WCSP) is thermally limited to 1.2 W/channel on the EVM. For layouts with higher trace density and additional copper, the maximum output power will be larger. See the data sheet for device descriptions.

NanoFree is a trademark of Texas Instruments.

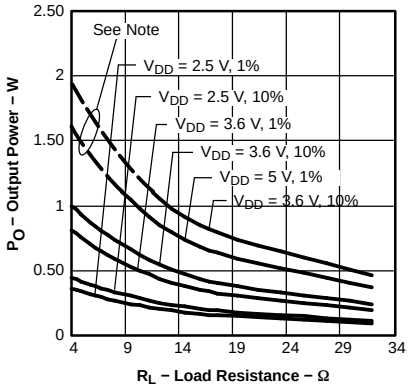

Figure 1. TPA2012D2 Output Power

Note:
The dashed portion of the curve indicates the region where the TPA2012D2YZH (WCSP) is thermally limited. Output power in this region will depend on the heat dissipation provided by the circuit board. TPA2012D2RTJ (QFN) is not thermally limited and can achieve output power along both the solid and dashed portions of the curves.

2 Operation

This section describes how to operate the TPA2012D2 EVM.

2.1 Quick Start for Stand-Alone Operation

Use the following steps when operating the TPA2012D2 EVM standalone or when connecting the EVM into existing circuits or equipment.

2.1.1 Power and Ground

1. Ensure the external power sources are set to OFF.
2. Set the power supply voltage between 2.5 V and 5.5 V. When connecting the power supply to the EVM, make sure to attach the ground connection to the GND header pin first and then connect the positive supply to the VDD header pin. Verify that the connections are made to the correct header pins.

2.1.2 Inputs and Outputs

2.1.2.1 Audio

1. Ensure that the audio source is set to the minimum level.
2. Connect the audio source to the inputs, INL+/- and INR+/-.
   – For a differential audio source, connect the audio source directlty to the appropriate input header pins.
   – For a single-ended audio source, connect the audio source to the negative input header pin of the appropriate channel and ground the positive audio input header pin.
3. Connect speakers (4 Ω?32 Ω) to the output pins, OUTL+/- and OUTR+/-.

2.1.2.2 Gain Control

1. The GAIN0 and GAIN1 jumpers control the gain setting of the TPA2012D2. With the jumpers installed, the G0 and G1 pins are pulled to ground. See Table 1 for gain setting values.

Table 1. Gain Settings

GAIN1 (1)	GAIN0 (1)	Amplifier Gain Setting (typ)	
		V/V	dB
0	0	2	6
0	1	4	12
1	0	8	18
1	1	16	24

(1) 0 = Jumper installed, 1 = Jumper not installed

2.1.2.3 Shutdown Controls

1. The TPA2012D2 provides independent shutdown controls so that each channel can be controlled separately. The shutdown pins, $\overline{\text{SDL}}$ and $\overline{\text{SDR}}$, are active low. This means that a low voltage (ground) on this pin places the appropriate channel in shutdown mode. Using the pushbuttons provided on the EVM, the TPA2012D2 can be placed in shutdown by pressing and holding the button(s) down. Both buttons must be depressed in order for both channels of the TPA2012D2 to turn off. When the buttons are released, the appropriate channel on the device restarts.
2. The jumper J1 can be used to tie $\overline{\text{SDL}}$ and $\overline{\text{SDR}}$ signals together. With jumper J1 installed, both channels can be placed in shutdown by pressing either $\overline{\text{SDL}}$ or $\overline{\text{SDR}}$. This is the default configuration of the EVM.

2.2 Power Up

1. Verify the correct connections as described in Sections 2.1.1 and 2.1.2.
2. Verify the voltage setting of the power supply is between 2.5 V and 5.5 V and turn ON the power supply. Proper operation of the EVM should begin.
3. Adjust the audio signal source as needed.

3 Reference

This section includes the EVM schematic, parts list, and board layout reference.

3.1 TPA2012D2 EVM PCB Layers

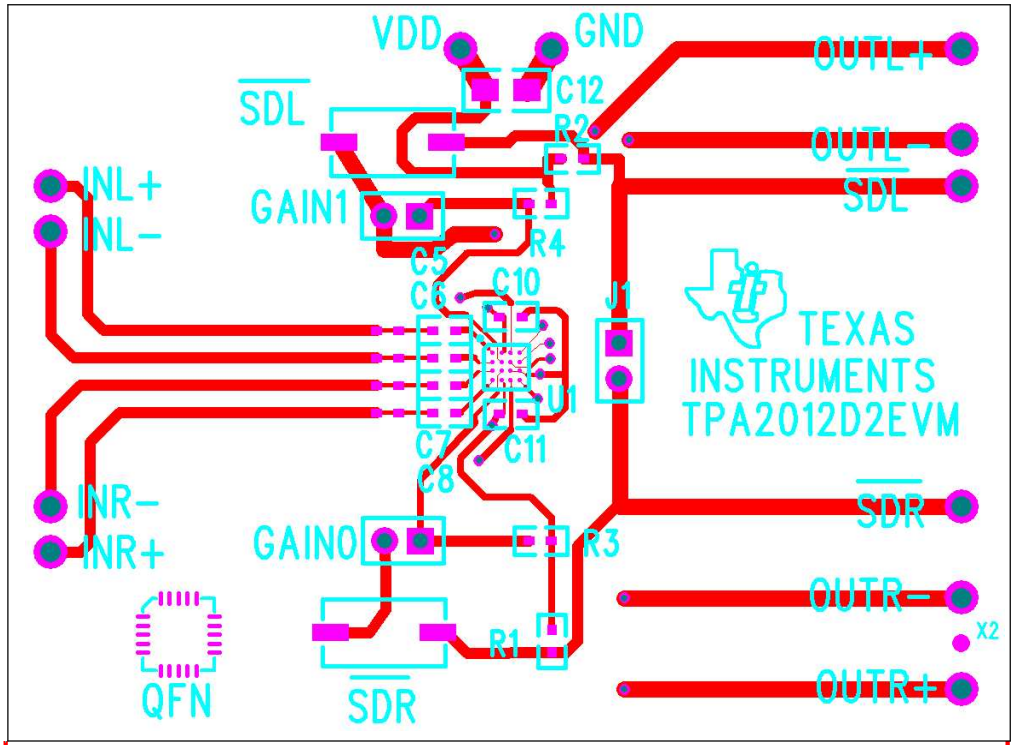

Figure 2. Top Layer

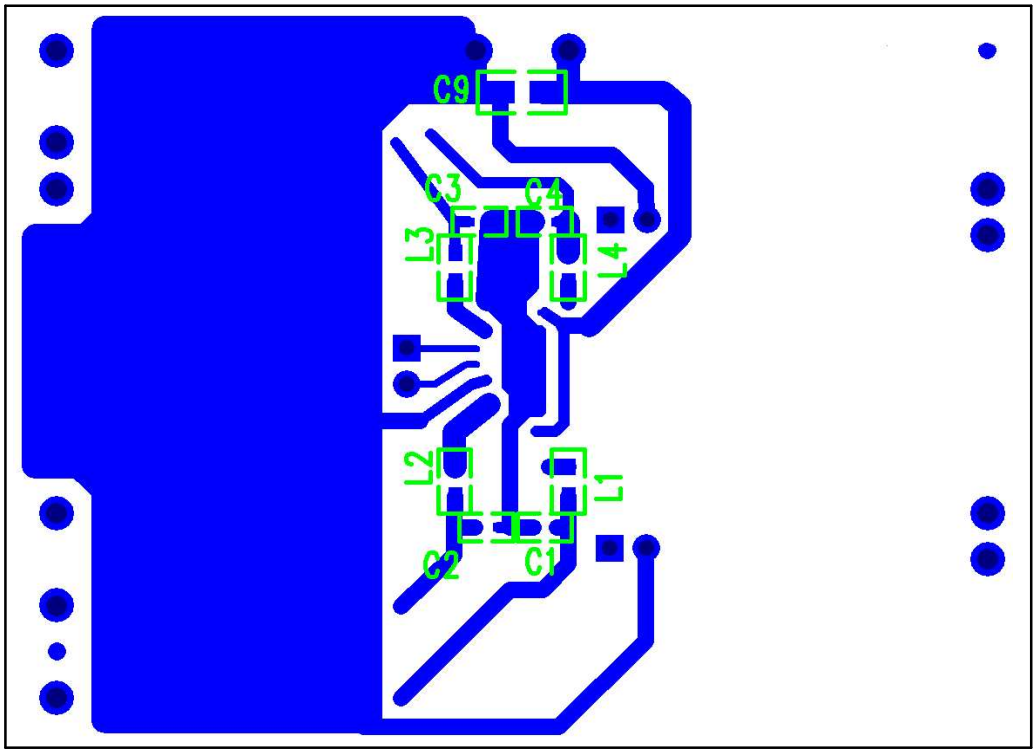

Figure 3. Bottom Layer

3.2 TPA2012D2 EVM Schematic Diagram

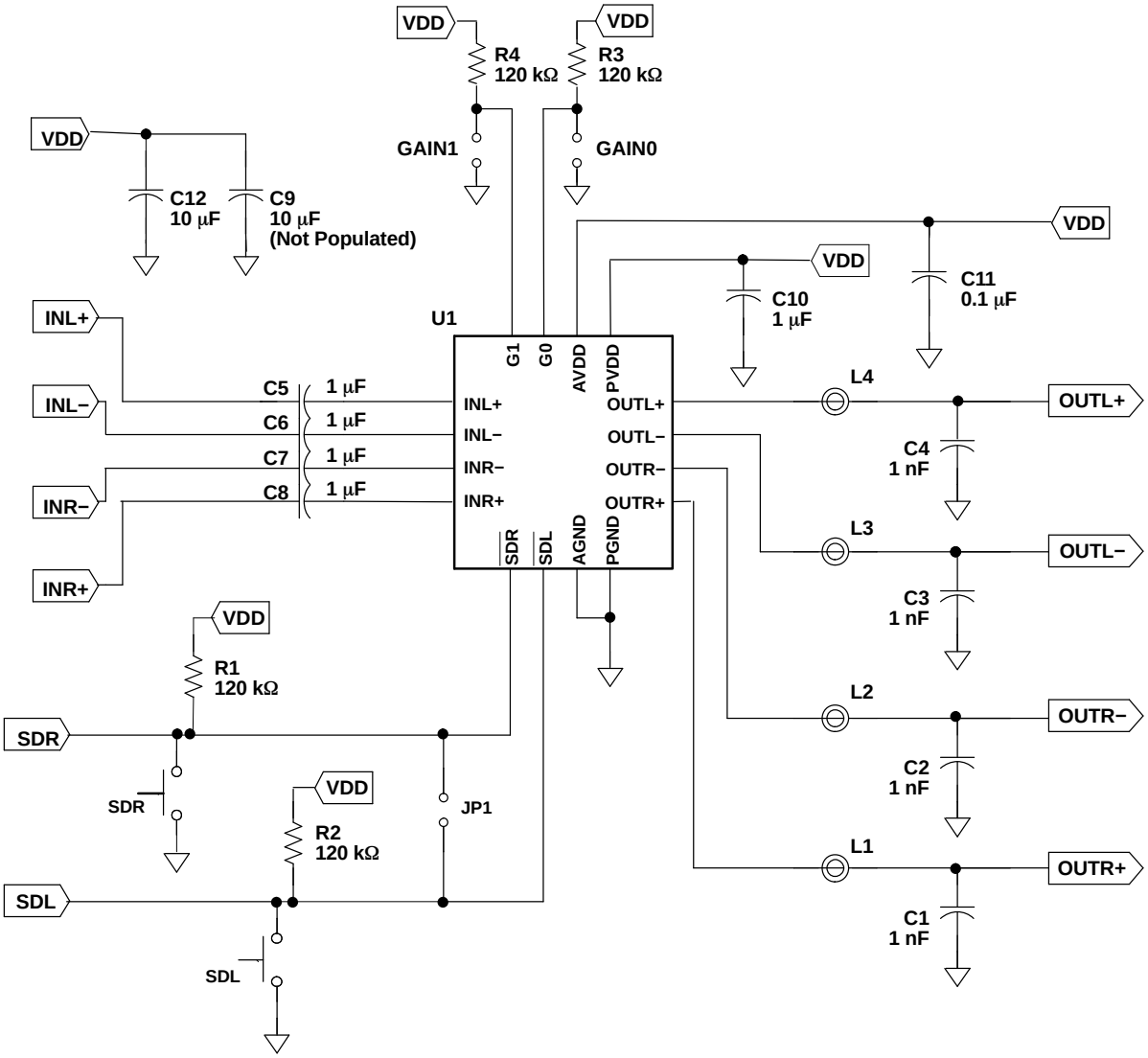

Figure 4. TPA2012D2 EVM Schematic Diagram

3.3 TPA2012D2 Audio Power Amplifer Evaluation Module Parts List

Table 2. TPA2012D2 EVM Parts List

Part No.	Description	Size	Qty.	Vendor Part Number
C1-C4	Capacitor, Ceramic, 1 nF, 50V, X7R	0402	4	TDK C1005X7R1H102
C5-C8, C10	Capacitor, Ceramic, 1 µF, 6.3V, Y5V	0402	5	TDK C1005Y5VOJ105
C11	Capacitor, Ceramic, 0.1 µF, 6.3V, X5R	0402	1	TDK C1005X5R1A104
C12	Capacitor, Ceramic, 10 µF, 10V, Y5V	0805	1	TDK C2012Y5V1A106
C9	Capacitor (Do not populate)	0805	1	
R1-R4	Resistor, 120 K, 1/16W, 1%	0402	2	Pb-free
SDL, SDR	Momentary switch		2	Panasonic, EVQ-PPBA25
U1	TPA2012D2 audio amplifier IC WCSP		1	TI
QFN	TPA2012D2 QFN package			TI
GAIN0, GAIN1, J1	Jumper, Position, 2 mm Header		3	Norcomp 2163-36-01-P2
PNP HEADERS	Terminal post headers		12	Sullins, PTC36SABN SAMTEC TSW-19-8-G-S
L1-L4	Ferrite Bead	0603	4	TDK MPZ1608S221A
PCB	TPA2012D2 EVM printed circuit board		1	

4 Related Documentation From Texas Instruments

- ***TPA2012D2 2.1-W Stereo Filter-Free Class-D Audio Power Amplifier*** (SLOS438) This is the data sheet for the TPA2012D2 audio amplifier integrated circuit.

FCC Warnings

This equipment is intended for use in a laboratory test environment only. It generates, uses, and can radiate radio frequency energy and has not been tested for compliance with the limits of computing devices pursuant to subpart J of part 15 of FCC rules, which are designed to provide reasonable protection against radio frequency interference. Operation of this equipment in other environments may cause interference with radio communications, in which case the user at his own expense will be required to take whatever measures may be required to correct this interference.

EVM IMPORTANT NOTICE (CATEGORY B)

IMPORTANT: TI is providing the enclosed TPA2012D2 evaluation module under the following conditions:

This evaluation module (EVM) being provided by Texas Instruments (TI) is intended for use for ENGINEERING DEVELOPMENT OR EVALUATION PURPOSES ONLY and is not considered by Texas Instruments to be fit for commercial use. As such, this EVM may not be complete in terms of design and/or manufacturing related protective considerations including product safety measures typically found in the end-product incorporating the module. As a prototype, this product does not fall within the scope of the European Union Directive on electromagnetic compatibility and on low voltage and therefore may not meet the technical requirements of the directive. This EVM is not subject to the EU marking requirements.

- **Should this EVM not meet the specifications indicated in the User's Guide the EVM may be returned within 30 days from the date of delivery for a full refund. THE FOREGOING WARRANTY IS THE EXCLUSIVE WARRANTY MADE BY TI AND IS IN LIEU OF ALL OTHER WARRANTIES, EXPRESSED, IMPLIED, OR STATUTORY, INCLUDING ANY WARRANTY OF MERCHANTABILITY OR FITNESS FOR ANY PARTICULAR PURPOSE.**
- The user assumes all responsibility and liability for proper and safe handling of the EVM. The user acknowledge that the use of the EVM could present serious hazards and that it is the user's responsibility to take all precautions for the handling and use of the EVMs in accordance with good laboratory practices. Please be aware that the products received may not be regulatory compliant or agency certified (FCC, UL, etc.). Due to the open construction of the product, it is the user's responsibility to take any and all appropriate precautions with regard to electrostatic discharge.
- **NEITHER PARTY WILL BE LIABLE TO THE OTHER FOR ANY INDIRECT, SPECIAL, INCIDENTAL, OR CONSEQUENTIAL DAMAGES.**
- TI is currently dealing with various customers for products, and therefore our arrangement with the user **will not be exclusive**.
- TI **assumes no liability for applications assistance, customer product design, software performance, or infringement of patents or services described herein**.
- Please read the User's Guide and specifically the section in the User's Guide pertaining to warnings and restrictions prior to handling the product. This section contains important information regarding high temperature and voltages which TI recommends to be read before handling the EVMs. In case of any doubt regarding safety, please contact the TI application engineer.
- Persons handling the product should have electronics training and observe good laboratory practice standards.
- No license is granted under any patent right or other intellectual property right of TI covering or relating to any combination, machine, or process in which such TI products or services might be or are used.
- This Agreement is subject to the laws of the State of Texas, excluding the body of conflicts of laws and the United Nations Convention on the International Sale of Goods, and will be subject to the exclusive jurisdiction of the courts of the State of Texas.

EVM WARNINGS AND RESTRICTIONS

It is important to operate this EVM within the input voltage range of 2.5 V to 5 V and the output voltage range of xxx V to xxx V.

Exceeding the specified input range may cause unexpected operation and/or irreversible damage to the EVM. If there are questions concerning the input range, please contact a TI field representative prior to connecting the input power.

Applying loads outside of the specified output range may result in unintended operation and/or possible permanent damage to the EVM. Please consult the EVM User's Guide prior to connecting any load to the EVM output. If there is uncertainty as to the load specification, please contact a TI field representative.

During normal operation, some circuit components may have case temperatures greater than 60ï½ C. The EVM is designed to operate properly with certain components above 60ï½ C as long as the input and output ranges are maintained. These components include but are not limited to linear regulators, switching transistors, pass transistors, and current sense resistors. These types of devices can be identified using the EVM schematic located in the EVM User's Guide. When placing measurement probes near these devices during operation, please be aware that these devices may be very warm to the touch.

Mailing Address: Texas Instruments, Post Office Box 655303, Dallas, Texas 75265
Copyright © 2004, Texas Instruments Incorporated

IMPORTANT NOTICE

Texas Instruments Incorporated and its subsidiaries (TI) reserve the right to make corrections, modifications, enhancements, improvements, and other changes to its products and services at any time and to discontinue any product or service without notice. Customers should obtain the latest relevant information before placing orders and should verify that such information is current and complete. All products are sold subject to TI's terms and conditions of sale supplied at the time of order acknowledgment.

TI warrants performance of its hardware products to the specifications applicable at the time of sale in accordance with TI's standard warranty. Testing and other quality control techniques are used to the extent TI deems necessary to support this warranty. Except where mandated by government requirements, testing of all parameters of each product is not necessarily performed.

TI assumes no liability for applications assistance or customer product design. Customers are responsible for their products and applications using TI components. To minimize the risks associated with customer products and applications, customers should provide adequate design and operating safeguards.

TI does not warrant or represent that any license, either express or implied, is granted under any TI patent right, copyright, mask work right, or other TI intellectual property right relating to any combination, machine, or process in which TI products or services are used. Information published by TI regarding third-party products or services does not constitute a license from TI to use such products or services or a warranty or endorsement thereof. Use of such information may require a license from a third party under the patents or other intellectual property of the third party, or a license from TI under the patents or other intellectual property of TI.

Reproduction of information in TI data books or data sheets is permissible only if reproduction is without alteration and is accompanied by all associated warranties, conditions, limitations, and notices. Reproduction of this information with alteration is an unfair and deceptive business practice. TI is not responsible or liable for such altered documentation.

Resale of TI products or services with statements different from or beyond the parameters stated by TI for that product or service voids all express and any implied warranties for the associated TI product or service and is an unfair and deceptive business practice. TI is not responsible or liable for any such statements.

TI products are not authorized for use in safety-critical applications (such as life support) where a failure of the TI product would reasonably be expected to cause severe personal injury or death, unless officers of the parties have executed an agreement specifically governing such use. Buyers represent that they have all necessary expertise in the safety and regulatory ramifications of their applications, and acknowledge and agree that they are solely responsible for all legal, regulatory and safety-related requirements concerning their products and any use of TI products in such safety-critical applications, notwithstanding any applications-related information or support that may be provided by TI. Further, Buyers must fully indemnify TI and its representatives against any damages arising out of the use of TI products in such safety-critical applications.

TI products are neither designed nor intended for use in military/aerospace applications or environments unless the TI products are specifically designated by TI as military-grade or "enhanced plastic." Only products designated by TI as military-grade meet military specifications. Buyers acknowledge and agree that any such use of TI products which TI has not designated as military-grade is solely at the Buyer's risk, and that they are solely responsible for compliance with all legal and regulatory requirements in connection with such use.

TI products are neither designed nor intended for use in automotive applications or environments unless the specific TI products are designated by TI as compliant with ISO/TS 16949 requirements. Buyers acknowledge and agree that, if they use any non-designated products in automotive applications, TI will not be responsible for any failure to meet such requirements.

Following are URLs where you can obtain information on other Texas Instruments products and application solutions:

Products		**Applications**	
Amplifiers	amplifier.ti.com	Audio	www.ti.com/audio
Data Converters	dataconverter.ti.com	Automotive	www.ti.com/automotive
DSP	dsp.ti.com	Broadband	www.ti.com/broadband
Interface	interface.ti.com	Digital Control	www.ti.com/digitalcontrol
Logic	logic.ti.com	Military	www.ti.com/military
Power Mgmt	power.ti.com	Optical Networking	www.ti.com/opticalnetwork
Microcontrollers	microcontroller.ti.com	Security	www.ti.com/security
RFID	www.ti-rfid.com	Telephony	www.ti.com/telephony
Low Power Wireless	www.ti.com/lpw	Video & Imaging	www.ti.com/video
		Wireless	www.ti.com/wireless

Mailing Address: Texas Instruments, Post Office Box 655303, Dallas, Texas 75265
Copyright © 2007, Texas Instruments Incorporated