- **Modulation Scheme Optimized to Operate Without a Filter**
- **1 W Into 8-Ω Speakers (THD+N< 0.4%)**
- **< 0.08% THD+N at 0.5 W, 1 kHz, Into 8-Ω Load**
- **Extremely Efficient 3rd Generation 5-V Class-D Technology:**
  - **Low Supply Current (No Filter) . . . 8 mA**
  - **Low Supply Current (Filter) . . . 15 mA**
  - **Low Shutdown Current . . . 1 μA**
  - **Low Noise Floor . . . 56 μV_{RMS}**
  - **Maximum Efficiency Into 8 Ω, 75 – 85%**
  - **4 Internal Gain Settings . . . 8 – 23.5 dB**
  - **PSRR . . . –77 dB**
- **Integrated Depop Circuitry**
- **Short-Circuit Protection (Short to Battery, Ground, and Load)**
- **–40°C to 85°C Operating Temperature Range**

PWP PACKAGE
(TOP VIEW)

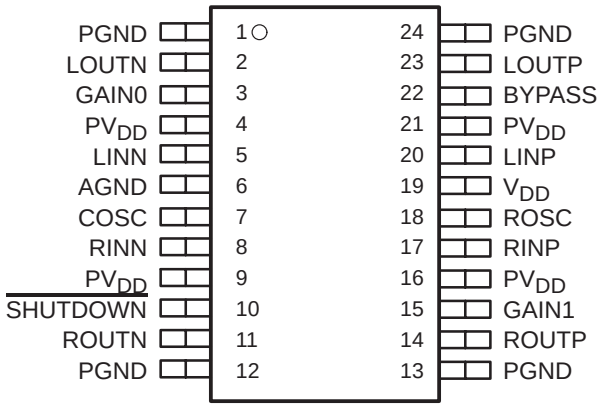

description

The TPA2001D2 is the third generation 5-V class-D amplifier from Texas Instruments. Improvements to previous generation devices include: lower supply current, lower noise floor, better efficiency, four different gain settings, smaller packaging, and fewer external components. The most significant advancement with this device is its modulation scheme that allows the amplifier to operate without the output filter. Eliminating the output filter saves the user approximately 30% in system cost and 75% in PCB area.

The TPA2001D2 is a monolithic class-D power IC stereo audio amplifier, using the high switching speed of power MOSFET transistors. These transistors reproduce the analog signal through high-frequency switching of the output stage. The TPA2001D2 is configured as a bridge-tied load (BTL) amplifier capable of delivering greater than 1 W of continuous average power into an 8-Ω load at less than 0.6% THD+N from a 5-V power supply in the high fidelity range (20 Hz to 20 kHz). With 1 W being delivered to an 8-Ω load at 1 kHz, the typical THD+N is less than 0.08%.

A BTL configuration eliminates the need for external coupling capacitors on the output. Low supply current of 8 mA makes the device ideal for battery-powered applications. Protection circuitry increases device reliability: thermal, over-current, and under-voltage shutdown.

Efficient class-D modulation enables the TPA2001D2 to operate at full power into 8-Ω loads at an ambient temperature of 85°C.

AVAILABLE OPTIONS

T_A	PACKAGED DEVICE
	TSSOP (PWP)
–40°C to 85°C	TPA2001D2PWP

NOTE: The PWP package is available taped and reeled. To order a taped and reeled part, add the suffix R to the part number (e.g., TPA2001D2PWPR).

Please be aware that an important notice concerning availability, standard warranty, and use in critical applications of Texas Instruments semiconductor products and disclaimers thereto appears at the end of this data sheet.

PowerPAD is a trademark of Texas Instruments.

PRODUCTION DATA information is current as of publication date. Products conform to specifications per the terms of Texas Instruments standard warranty. Production processing does not necessarily include testing of all parameters.

Copyright © 2000, Texas Instruments Incorporated

functional block diagram

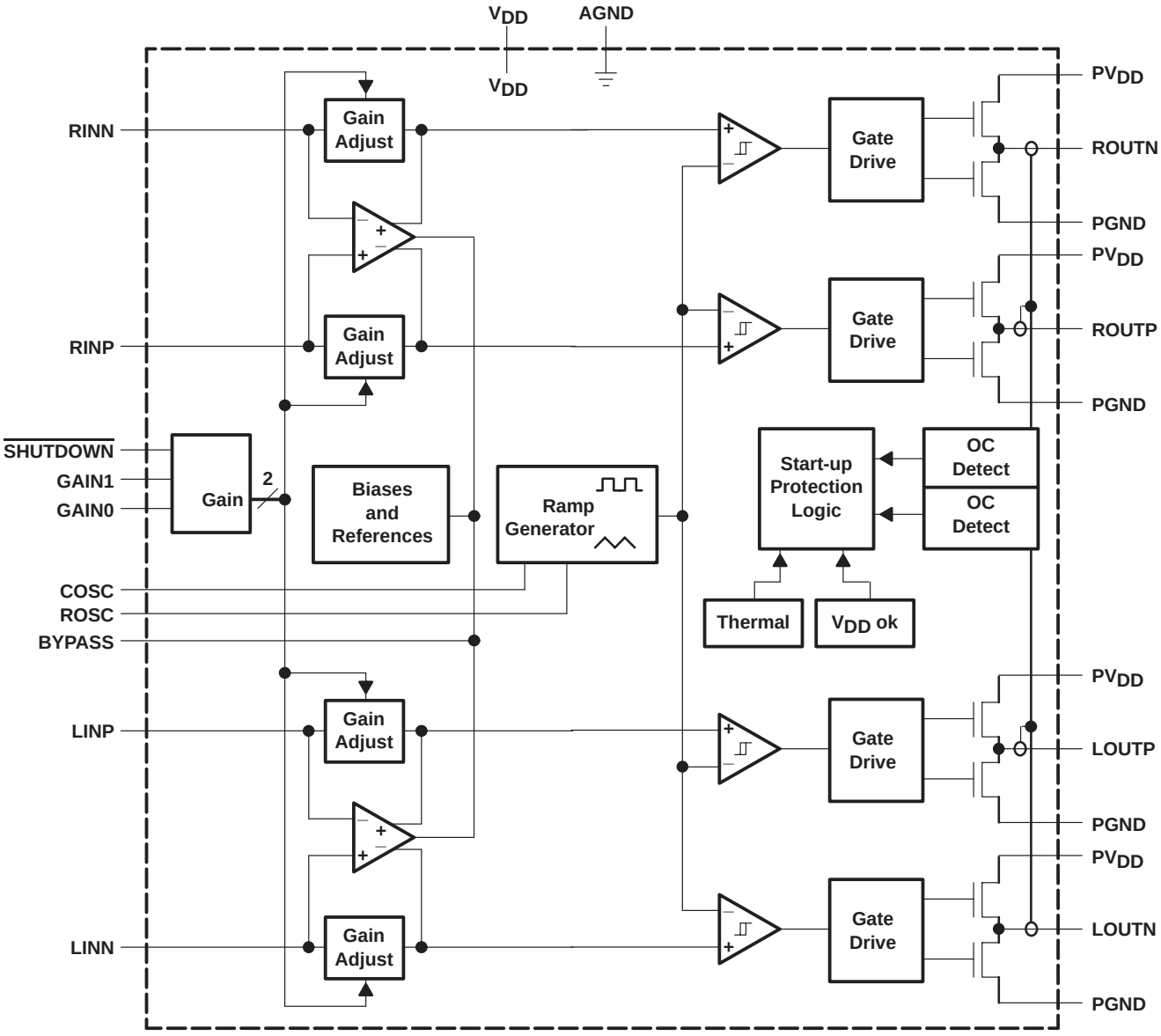

Terminal Function

TERMINAL NAME	TERMINAL NO.	I/O	DESCRIPTION
AGND	6	–	Analog ground
BYPASS	22	I	Tap to voltage divider for internal midsupply bias generator used for analog reference.
COSC	7	I	A capacitor connected to this terminal sets the oscillation frequency in conjunction with ROSC. For proper operation, connect a 220 pF capacitor from COSC to ground.
GAIN0	3	I	Bit 0 of gain control (TTL logic level)
GAIN1	15	I	Bit 1 of gain control (TTL logic level)
LINN	5	I	Left channel negative differential audio input
LINP	20	I	Left channel positive differential audio input
LOUTN	2	O	Left channel negative audio output
LOUTP	23	O	Left channel positive audio output
PGND	1, 24	–	Power ground for left channel H-bridge
	12, 13	–	Power ground for right channel H-bridge
PV_{DD}	4, 21	–	Power supply for left channel H-bridge
	9, 16	–	Power supply for right channel H-bridge
RINN	8	I	Right channel negative differential audio input
RINP	17	I	Right channel positive differential audio input
ROSC	18	I	A resistor connected to this terminal sets the oscillation frequency in conjunction with COSC. For proper operation, connect a 120 kΩ resistor from ROSC to ground.
ROUTN	11	O	Right channel negative audio output
ROUTP	14	O	Right channel positive output
$\overline{\text{SHUTDOWN}}$	10	I	Places the amplifier in shutdown mode if a TTL logic low is placed on this terminal; normal operation if a TTL logic high is placed on this terminal.
V_{DD}	19	–	Analog power supply

absolute maximum ratings over operating free-air temperature (unless otherwise noted)†

Supply voltage, V_{DD}, PV_{DD} . . . . . –0.3 V to 6 V
Input voltage, V_I . . . . . –0.3 V to V_{DD}+0.3 V
Continuous total power dissipation . . . . . See Dissipation Rating Table
Operating free-air temperature range, T_A . . . . . –40°C to 85°C
Operating junction temperature range, T_J . . . . . –40°C to 150°C
Storage temperature range, T_{stg} . . . . . –65°C to 150°C
Lead temperature 1,6 mm (1/16 inch) from case for 10 seconds . . . . . 260°C

† Stresses beyond those listed under “absolute maximum ratings” may cause permanent damage to the device. These are stress ratings only, and functional operation of the device at these or any other conditions beyond those indicated under “recommended operating conditions” is not implied. Exposure to absolute-maximum-rated conditions for extended periods may affect device reliability.

DISSIPATION RATING TABLE

PACKAGE	$T_A \le 25°C$ POWER RATING	DERATING FACTOR ABOVE $T_A = 25°C$	$T_A = 70°C$ POWER RATING	$T_A = 125°C$ POWER RATING
PWP	2.7 W	21.8 mW/°C	1.7 W	1.4 W

recommended operating conditions

		MIN	MAX	UNIT
Supply voltage, V_{DD}, PV_{DD}		4.5	5.5	V
High-level input voltage, V_{IH}	GAIN0, GAIN1, $\overline{\text{SHUTDOWN}}$	2		V
Low-level input voltage, V_{IL}	GAIN0, GAIN1, $\overline{\text{SHUTDOWN}}$		0.8	V
Operating free-air temperature, T_A		–40	85	°C
PWM Frequency		200	300	kHz

electrical characteristics, T_A = 25°C, V_{DD} = PV_{DD} = 5 V (unless otherwise noted)

PARAMETER		TEST CONDITIONS	MIN	TYP	MAX	UNIT
$\lvert V_{OO} \rvert$	Output offset voltage (measured differentially)	V_I = 0 V			10	mV
PSRR	Power supply rejection ratio	V_{DD}=PV_{DD} = 4.5 V to 5.5 V		–77		dB
I_{IH}	High-level input current	V_{DD}=PV_{DD} = 5.5 V, V_I = V_{DD} = PV_{DD}			1	μA
I_{IL}	Low-level input current	V_{DD}=PV_{DD} = 5.5 V, V_I = 0 V	–1			μA
I_{DD}	Supply current	No filter (with or without speaker load)		8	10	mA
I_{DD}	Supply current	With filter, L = 22 μH, C = 1 μF		15		mA
$I_{DD(SD)}$	Supply current, shutdown mode			1	10	μA

operating characteristics, T_A = 25°C, V_{DD} = PV_{DD} = 5 V, R_L = 8 Ω, Gain = 8 dB (unless otherwise noted)

PARAMETER		TEST CONDITIONS	MIN	TYP	MAX	UNIT
P_O	Output power	THD = 0.4%, f = 1 kHz, R_L = 8 Ω		1		W
THD+N	Total harmonic distortion plus noise	P_O = 0.5 W, f = 20 Hz to 20 kHz		<0.2%		
B_{OM}	Maximum output power bandwidth	THD = 5%		20		kHz
k_{SVR}	Supply ripple rejection ratio	f = 1 kHz, $C_{(BYPASS)}$ = 0.4 μF		–60		dB
SNR	Signal-to-noise ratio	20 Hz to 20 kHz		87		dBV
	Integrated noise floor	20 Hz to 20 kHz, No input		56		μV
Z_I	Input impedance			>20		kΩ

Table 1. Gain Settings

GAIN0	GAIN1	AMPLIFIER GAIN (dB)	INPUT IMPEDANCE (kΩ)
		TYP	TYP
0	0	8	104
0	1	12	74
1	0	17.5	44
1	1	23.5	24

APPLICATION INFORMATION

eliminating the output filter with the TPA2001D2

This section will focus on why the user can eliminate the output filter with the TPA2001D2.

effect on audio

The class-D amplifier outputs a pulse-width modulated (PWM) square wave, which is the sum of the switching waveform and the amplified input audio signal. The human ear acts as a band-pass filter such that only the frequencies between approximately 20 Hz and 20 kHz are passed. The switching frequency components are much greater than 20 kHz, so the only signal heard is the amplified input audio signal.

traditional class-D modulation scheme

The traditional class-D modulation scheme, which is used in the TPA005Dxx family, has a differential output where each output is 180 degrees out of phase and changes from ground to the supply voltage, V_{DD}. Therefore, the differential pre-filtered output varies between positive and negative V_{DD}, where filtered 50% duty cycle yields 0 volts across the load. The traditional class-D modulation scheme with voltage and current waveforms is shown in Figure 1. Note that even at an average of 0 volts across the load (50% duty cycle), the current to the load is high causing high loss thus causing a high supply current.

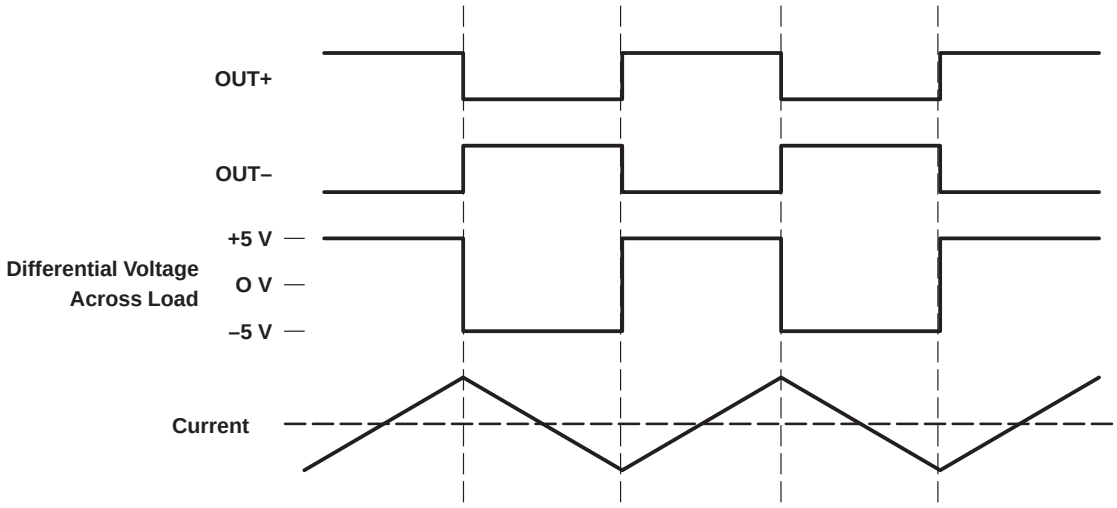

Figure 1. Traditional Class-D Modulation Scheme's Output Voltage and Current Waveforms Into an Inductive Load With no Input

TPA2001D2 modulation scheme

The TPA2001D2 uses a modulation scheme that still has each output switching from 0 to the supply voltage. However, OUT+ and OUT– are now in phase with each other with no input. The duty cycle of OUT+ is greater than 50% and OUT– is less than 50% for positive voltages. The duty cycle of OUT+ is less than 50% and OUT– is greater than 50% for negative voltages. The voltage across the load sits at 0 volts throughout most of the switching period greatly reducing the switching current, which reduces any I^2R losses in the load.

APPLICATION INFORMATION

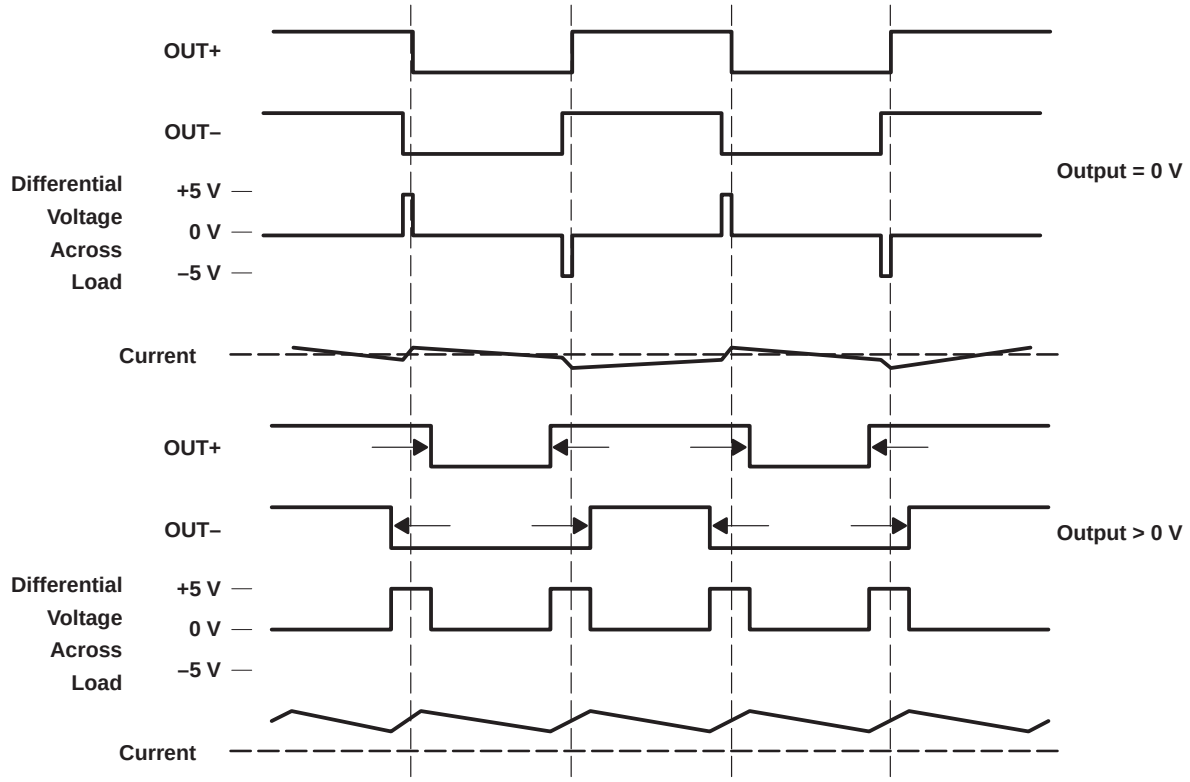

Figure 2. The TPA2001D2 Output Voltage and Current Waveforms Into an Inductive Load

efficiency: why you must use a filter with the traditional class-D modulation scheme

The main reason that the traditional class-D amplifier needs an output filter is that the switching waveform results in maximum current flow. This causes more loss in the load, which causes lower efficiency. The ripple current is large for the traditional modulation scheme because the ripple current is proportional to voltage multiplied by the time at that voltage. The differential voltage swing is $2 \times V_{DD}$ and the time at each voltage is half the period for the traditional modulation scheme. An ideal LC filter is needed to store the ripple current from each half cycle for the next half cycle, while any resistance causes power dissipation. The speaker is both resistive and reactive, whereas an LC filter is almost purely reactive.

The TPA2001D2 modulation scheme has very little loss in the load without a filter because the pulses are very short and the change in voltage is V_{DD} instead of $2 \times V_{DD}$. As the output power increases, the pulses widen making the ripple current larger. Ripple current could be filtered with an LC filter for increased efficiency, but for most applications the filter is not needed.

An LC filter with a cut-off frequency less than the class-D switching frequency allows the switching current to flow through the filter instead of the load. The filter has less resistance than the speaker that results in less power dissipated, which increases efficiency.

APPLICATION INFORMATION

effects of applying a square wave into a speaker

Audio specialists have said for years not to apply a square wave to speakers. If the amplitude of the waveform is high enough and the frequency of the square wave is within the bandwidth of the speaker, the square wave could cause the voice coil to jump out of the air gap and/or scar the voice coil. A 250-kHz switching frequency, however, is not significant because the speaker cone movement is proportional to $1/f^2$ for frequencies beyond the audio band. Therefore, the amount of cone movement at the switching frequency is very small. However, damage could occur to the speaker if the voice coil is not designed to handle the additional power. To size the speaker for added power, the ripple current dissipated in the load needs to be calculated by subtracting the theoretical supplied power, $P_{SUP\ THEORETICAL}$, from the actual supply power, P_{SUP}, at maximum output power, P_{OUT}. The switching power dissipated in the speaker is the inverse of the measured efficiency, $\eta_{MEASURED}$, minus the theoretical efficiency, $\eta_{THEORETICAL}$.

$$P_{SPKR} = P_{SUP} - P_{SUP\ THEORETICAL} \text{ (at max output power)} \quad (1)$$

$$P_{SPKR} = P_{SUP} / P_{OUT} - P_{SUP\ THEORETICAL} / P_{OUT} \text{ (at max output power)} \quad (2)$$

$$P_{SPKR} = 1/\eta_{MEASURED} - 1/\eta_{THEORETICAL} \text{ (at max output power)} \quad (3)$$

The maximum efficiency of the TPA2001D2 with an 8-Ω load is 85%. Using equation 3 with the efficiency at maximum power (78%) there is an additional 106 mW dissipated in the speaker. The added power dissipated in the speaker is not an issue as long as it is taken into account when choosing the speaker.

when to use an output filter

Design the TPA2001D2 without the filter if the traces from amplifier to speaker are short. The TPA2001D2 passed FCC and CE radiated emissions with no shielding with speaker wires 8 inches long or less. Notebook PCs and powered speakers where the speaker is in the same enclosure as the amplifier are good applications for class-D without a filter.

A ferrite bead filter can often be used if the design is failing radiated emissions without a filter, and the frequency sensitive circuit is greater than 1 MHz. This is good for circuits that just have to pass FCC and CE because FCC and CE only test radiated emissions greater than 30 MHz. If choosing a ferrite bead, choose one with high impedance at high frequencies, but very low impedance at low frequencies.

Use an output filter if there are low frequency (< 1 MHz) EMI sensitive circuits and/or there are long leads from amplifier to speaker.

gain setting via GAIN0 and GAIN1 inputs

The gain of the TPA2001D2 is set by two input terminals, GAIN0 and GAIN1.

The gains listed in Table 2 are realized by changing the taps on the input resistors inside the amplifier. This causes the input impedance, Z_I, to be dependent on the gain setting. The actual gain settings are controlled by ratios of resistors, so the actual gain distribution from part-to-part is quite good. However, the input impedance may shift by 30% due to shifts in the actual resistance of the input resistors.

For design purposes, the input network (discussed in the next section) should be designed assuming an input impedance of 20 kΩ, which is the absolute minimum input impedance of the TPA2001D2. At the higher gain settings, the input impedance could increase as high as 115 kΩ.

APPLICATION INFORMATION

Table 2. Gain Settings

GAIN0	GAIN1	AMPLIFIER GAIN (dB)	INPUT IMPEDANCE (kΩ)
		TYP	TYP
0	0	8	104
0	1	12	74
1	0	17.5	44
1	1	23.5	24

input resistance

Each gain setting is achieved by varying the input resistance of the amplifier, which can range from its smallest value to over 6 times that value. As a result, if a single capacitor is used in the input high pass filter, the –3 dB or cut-off frequency will also change by over 6 times. If an additional resistor is connected from the input pin of the amplifier to ground, as shown in the figure below, the variation of the cut-off frequency will be much reduced.

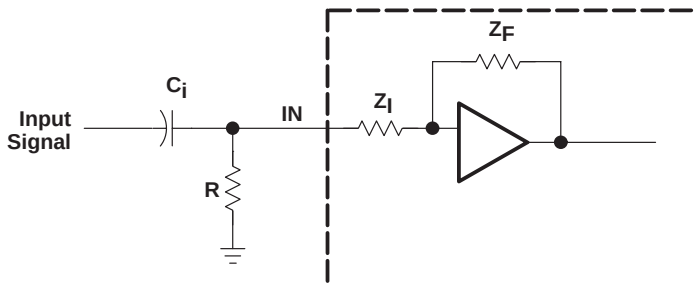

The –3 dB frequency can be calculated using equation 4:

$$f_{-3\ dB} = \frac{1}{2\pi C_i\left(R \parallel Z_I\right)} \tag{4}$$

If the filter must be more accurate, the value of the capacitor should be increased while value of the resistor to ground should be decreased. In addition, the order of the filter could be increased.

input capacitor, C_i

In the typical application an input capacitor, C_i, is required to allow the amplifier to bias the input signal to the proper dc level for optimum operation. In this case, C_i and the input impedance of the amplifier, Z_I, form a high-pass filter with the corner frequency determined in equation 5.

$$f_{c(highpass)} = \frac{1}{2\pi Z_I C_i} \tag{5}$$

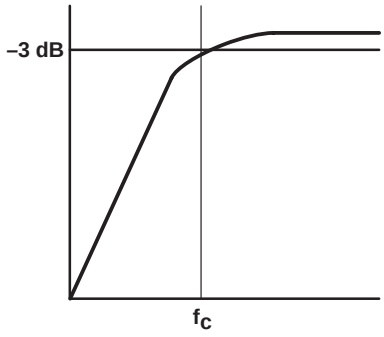

APPLICATION INFORMATION

The value of C_i is important as it directly affects the bass (low frequency) performance of the circuit. Consider the example where Z_I is 20 kΩ and the specification calls for a flat bass response down to 80 Hz. Equation 5 is reconfigured as equation 6.

$$C_i = \frac{1}{2\pi Z_I f_c} \quad (6)$$

In this example, C_i is 0.1 μF so one would likely choose a value in the range of 0.1 μF to 1 μF. If the gain is known and will be constant, use Z_I from Table 1 to calculate C_i. A further consideration for this capacitor is the leakage path from the input source through the input network (C_i) and the feedback network to the load. This leakage current creates a dc offset voltage at the input to the amplifier that reduces useful headroom, especially in high gain applications. For this reason a low-leakage tantalum or ceramic capacitor is the best choice. When polarized capacitors are used, the positive side of the capacitor should face the amplifier input in most applications as the dc level there is held at $V_{DD}/2$, which is likely higher than the source dc level. Note that it is important to confirm the capacitor polarity in the application.

C_i must be 10 times smaller than the bypass capacitor to reduce clicking and popping noise from power on/off and entering and leaving shutdown. After sizing C_i for a given cut-off frequency, size the bypass capacitor to 10 times that of the input capacitor.

$$C_i \leq C_{BYP} / 10 \quad (7)$$

power supply decoupling, C_S

The TPA2001D2 is a high-performance CMOS audio amplifier that requires adequate power supply decoupling to ensure the output total harmonic distortion (THD) is as low as possible. Power supply decoupling also prevents oscillations for long lead lengths between the amplifier and the speaker. The optimum decoupling is achieved by using two capacitors of different types that target different types of noise on the power supply leads. For higher frequency transients, spikes, or digital hash on the line, a good low equivalent-series-resistance (ESR) ceramic capacitor, typically 0.1 μF placed as close as possible to the device V_{DD} lead works best. For filtering lower-frequency noise signals, a larger aluminum electrolytic capacitor of 10 μF or greater placed near the audio power amplifier is recommended.

midrail bypass capacitor, C_{BYP}

The midrail bypass capacitor, C_{BYP}, is the most critical capacitor and serves several important functions. During start-up or recovery from shutdown mode, C_{BYP} determines the rate at which the amplifier starts up. The second function is to reduce noise produced by the power supply caused by coupling into the output drive signal. This noise is from the midrail generation circuit internal to the amplifier, which appears as degraded PSRR and THD+N.

Bypass capacitor, C_{BYP}, values of 0.47 μF to 1 μF ceramic or tantalum low-ESR capacitors are recommended for the best THD and noise performance.

Increasing the bypass capacitor reduces clicking and popping noise from power on/off and entering and leaving shutdown. To have minimal pop, C_{BYP} should be 10 times larger than C_i.

$$C_{BYP} \geq 10 \times C_i \quad (8)$$

APPLICATION INFORMATION

differential input

The differential input stage of the amplifier cancels any noise that appears on both input lines of a channel. To use the TPA2001D2 EVM with a differential source, connect the positive lead of the audio source to the RINP (LINP) input and the negative lead from the audio source to the RINN (LINN) input. To use the TPA2001D2 with a single-ended source, ac ground the RINN and LINN inputs through a capacitor and apply the audio single to the RINP and LINP inputs. In a single-ended input application, the RINN and LINN inputs should be ac grounded at the audio source instead of at the device inputs for best noise performance.

shutdown modes

The TPA2001D2 employs a shutdown mode of operation designed to reduce supply current, I_{DD}, to the absolute minimum level during periods of nonuse for battery-power conservation. The $\overline{\text{SHUTDOWN}}$ input terminal should be held high during normal operation when the amplifier is in use. Pulling $\overline{\text{SHUTDOWN}}$ low causes the outputs to mute and the amplifier to enter a low-current state, $I_{DD(SD)}$ = 1 µA. $\overline{\text{SHUTDOWN}}$ should never be left unconnected because amplifier operation would be unpredictable.

using low-ESR capacitors

Low-ESR capacitors are recommended throughout this application section. A real (as opposed to ideal) capacitor can be modeled simply as a resistor in series with an ideal capacitor. The voltage drop across this resistor minimizes the beneficial effects of the capacitor in the circuit. The lower the equivalent value of this resistance the more the real capacitor behaves like an ideal capacitor.

evaluation circuit

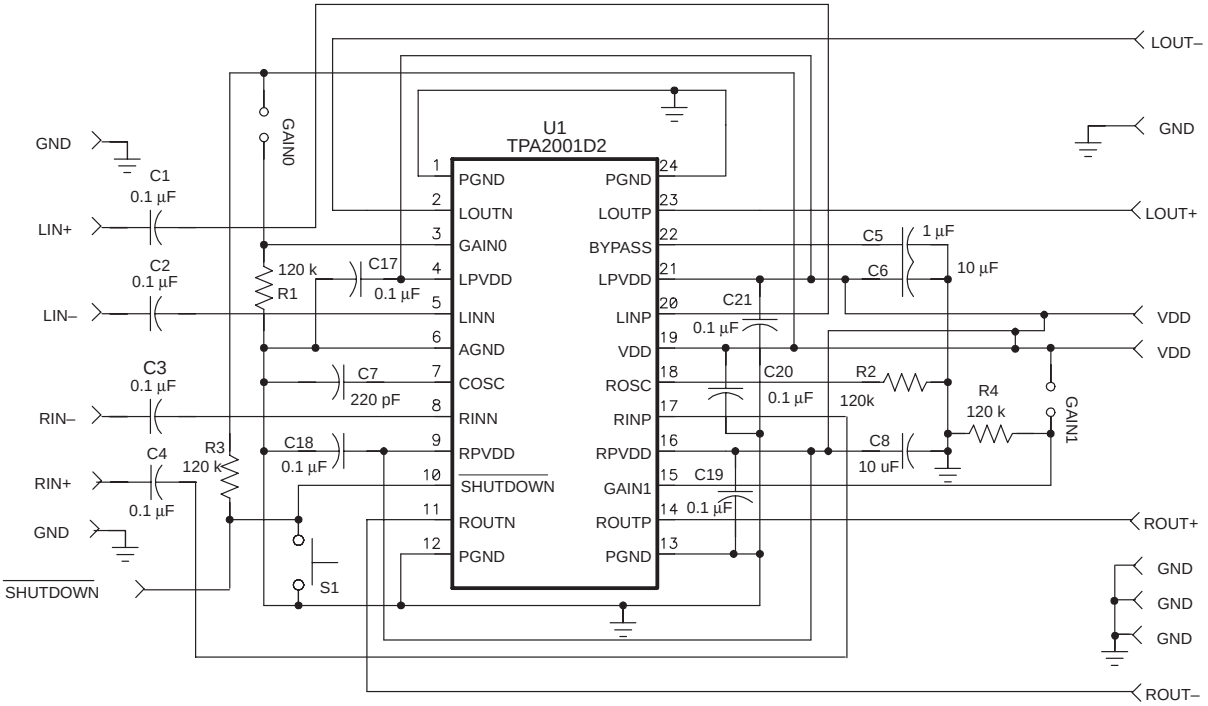

NOTE: R1, R3, and R4 are used in the EVM but are not required for normal applications.

APPLICATION INFORMATION

Table 3. TPA2001D2 Evaluation Bill of Materials

REFERENCE	DESCRIPTION	SIZE	QUANTITY	MANUFACTURER	PART NUMBER
C1–4, C17–21	Capacitor, ceramic chip, 0.1 μF, ±10%, X7R, 50 V	0805	9	Kemet	C0805C104K5RAC
C5	Capacitor, ceramic, 1.0 μF, +80%/–20%, Y5V, 16 V	0805	1	Murata	GRM40-Y5V105Z16
C6, C8	Capacitor, ceramic, 10 μF, +80%/–20%, Y5V, 16 V	1210	2	Murata	GRM235-Y5V106Z16
C7	Capacitor, ceramic, 220 pF, ±10%, XICON, 50 V	0805	2	Mouser	140–CC501B221K
R2, R1†, R3†, R4†	Resistor, chip, 120 kΩ, 1/10 W, 5%, XICON	0805	2	Mouser	260–120K
U1	IC, TPA2001D2, audio power amplifier, 2-W, 2-channel, class-D	24 pin TSSOP	1	TI	TPA2001D2PWP

† These components are used in the EVM, but they are not required for normal applications.

MECHANICAL DATA

PWP (R-PDSO-G)** **PowerPAD™ PLASTIC SMALL-OUTLINE**

20 PINS SHOWN

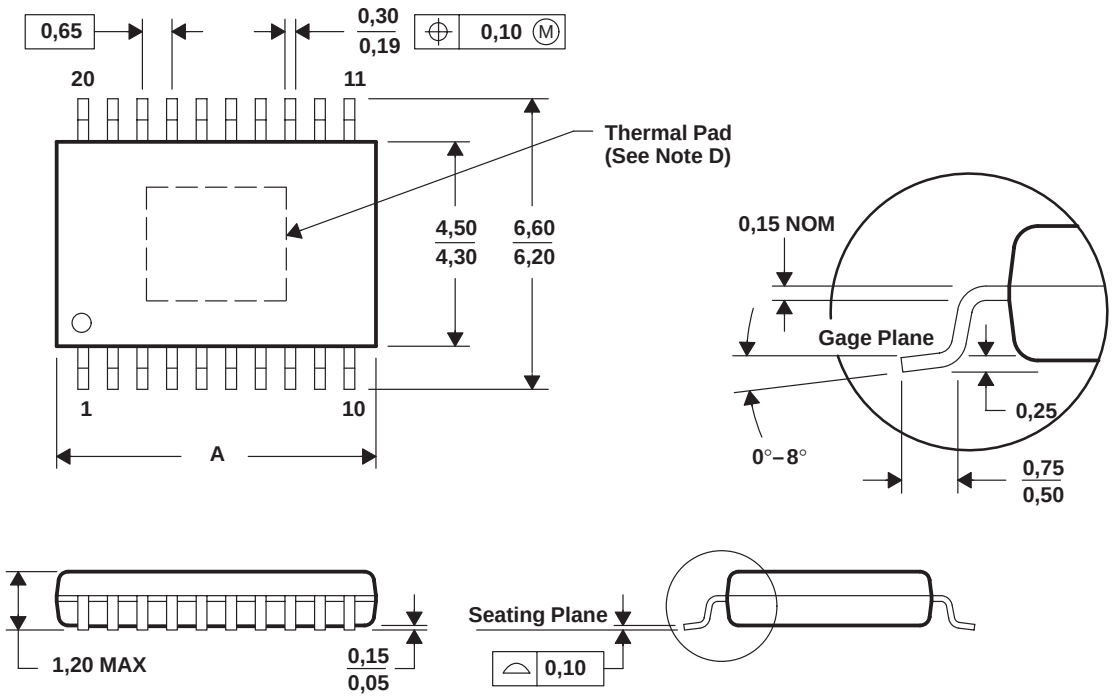

DIM \ PINS **	14	16	20	24	28
A MAX	5,10	5,10	6,60	7,90	9,80
A MIN	4,90	4,90	6,40	7,70	9,60

4073225/F 10/98

NOTES: A. All linear dimensions are in millimeters.
B. This drawing is subject to change without notice.
C. Body dimensions do not include mold flash or protrusions.
D. The package thermal performance may be enhanced by bonding the thermal pad to an external thermal plane. This pad is electrically and thermally connected to the backside of the die and possibly selected leads.
E. Falls within JEDEC MO-153

PowerPAD is a trademark of Texas Instruments Incorporated.

IMPORTANT NOTICE

Texas Instruments and its subsidiaries (TI) reserve the right to make changes to their products or to discontinue any product or service without notice, and advise customers to obtain the latest version of relevant information to verify, before placing orders, that information being relied on is current and complete. All products are sold subject to the terms and conditions of sale supplied at the time of order acknowledgment, including those pertaining to warranty, patent infringement, and limitation of liability.

TI warrants performance of its semiconductor products to the specifications applicable at the time of sale in accordance with TI's standard warranty. Testing and other quality control techniques are utilized to the extent TI deems necessary to support this warranty. Specific testing of all parameters of each device is not necessarily performed, except those mandated by government requirements.

Customers are responsible for their applications using TI components.

In order to minimize risks associated with the customer's applications, adequate design and operating safeguards must be provided by the customer to minimize inherent or procedural hazards.

TI assumes no liability for applications assistance or customer product design. TI does not warrant or represent that any license, either express or implied, is granted under any patent right, copyright, mask work right, or other intellectual property right of TI covering or relating to any combination, machine, or process in which such semiconductor products or services might be or are used. TI's publication of information regarding any third party's products or services does not constitute TI's approval, warranty or endorsement thereof.

Copyright © 2000, Texas Instruments Incorporated