Extended Temperature Serial Interface CODEC/Filter COMBO Family

Check for Samples: TP3054-X, TP3057-X

FEATURES

- **−40°C to +85°C Operation**
- **Complete CODEC and Filtering System (COMBO) Including:**
  - **Transmit High-Pass and Low-Pass Filtering**
  - **Receive Low-Pass Filter with Sin x/x Correction**
  - **Active RC Noise Filters**
  - **µ-Law or A-Law Compatible COder and DECoder**
  - **Internal Precision Voltage Reference**
  - **Serial I/O Interface**
  - **Internal Auto-Zero Circuitry**
- **µ-Law, 16-Pin - TP3054**
- **A-Law, 16-Pin - TP3057**
- **Designed for D3/D4 and CCITT Spplications**
- **±5V Operation**
- **Low Operating Power - Typically 50 mW**
- **Power-Down Standby Mode - Typically 3 mW**
- **Automatic Power-Down**
- **TTL or CMOS Compatible Digital Interfaces**
- **Maximizes Line Interface Card Circuit Density**
- **Dual-In-Line or PCC Surface Mount Packages**
- **See also AN-370, “Techniques for Designing with CODEC/Filter COMBO Circuits” (SNLA136)**

DESCRIPTION

The TP3054, TP3057 family consists of µ-law and A-law monolithic PCM CODEC/filters utilizing the A/D and D/A conversion architecture shown in Figure 3, and a serial PCM interface. The devices are fabricated using TI's advanced double-poly CMOS process (microCMOS).

The encode portion of each device consists of an input gain adjust amplifier, an active RC pre-filter which eliminates very high frequency noise prior to entering a switched-capacitor band-pass filter that rejects signals below 200 Hz and above 3400 Hz. Also included are auto-zero circuitry and a companding coder which samples the filtered signal and encodes it in the companded µ-law or A-law PCM format. The decode portion of each device consists of an expanding decoder, which reconstructs the analog signal from the companded µ-law or A-law code, a low-pass filter which corrects for the sin x/x response of the decoder output and rejects signals above 3400 Hz followed by a single-ended power amplifier capable of driving low impedance loads. The devices require two 1.536 MHz, 1.544 MHz or 2.048 MHz transmit and receive master clocks, which may be asynchronous; transmit and receive bit clocks, which may vary from 64 kHz to 2.048 MHz; and transmit and receive frame sync pulses. The timing of the frame sync pulses and PCM data is compatible with both industry standard formats.

Connection Diagram

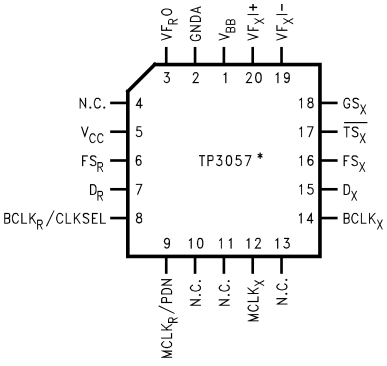

Figure 1. Plastic Chip Carriers (Top View)
Package Number FN0020A

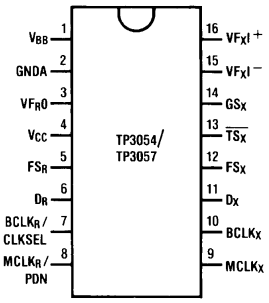

Figure 2. Dual-In-Line Package (Top View)
Package Number NFG001E & DW0016B

Please be aware that an important notice concerning availability, standard warranty, and use in critical applications of Texas Instruments semiconductor products and disclaimers thereto appears at the end of this data sheet.

All trademarks are the property of their respective owners.

PRODUCTION DATA information is current as of publication date. Products conform to specifications per the terms of the Texas Instruments standard warranty. Production processing does not necessarily include testing of all parameters.

Copyright © 2005–2013, Texas Instruments Incorporated

Block Diagram

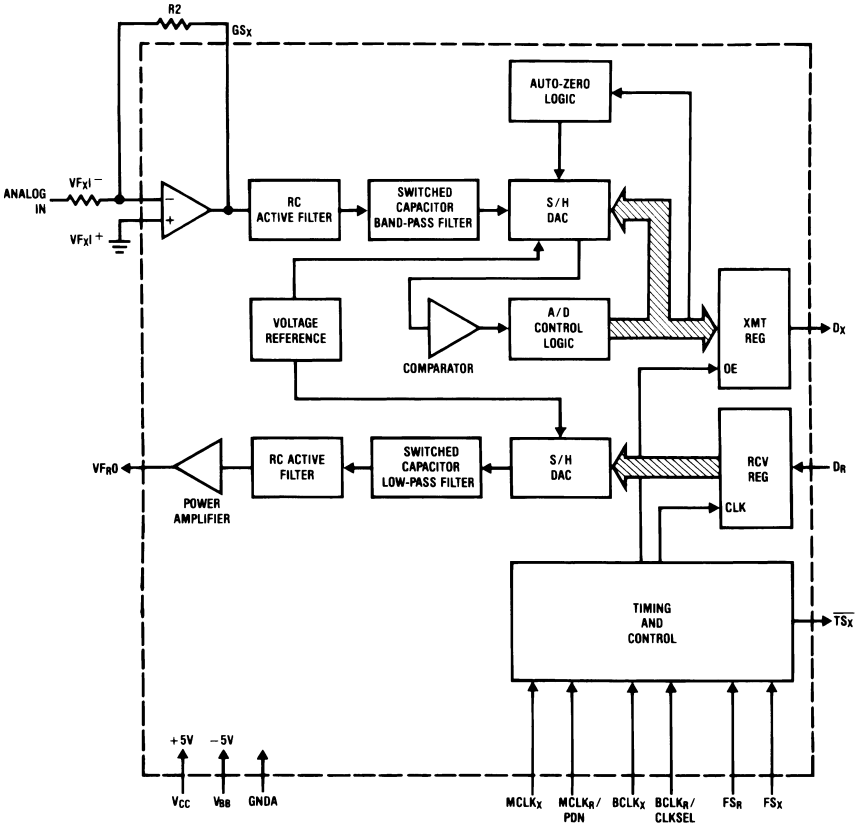

Figure 3.

PIN DESCRIPTIONS

Symbol	Function
V_{BB}	Negative power supply pin.
	V_{BB} = −5V ±5%.
GNDA	Analog ground. All signals are referenced to this pin.
VF_RO	Analog output of the receive power amplifier.
V_{CC}	Positive power supply pin.
	V_{CC} = +5V ±5%.
FS_R	Receive frame sync pulse which enables $BCLK_R$ to shift PCM data into D_R. FS_R is an 8 kHz pulse train. See Figure 4 and Figure 5 for timing details.
D_R	Receive data input. PCM data is shifted into D_R following the FS_R leading edge.
$BCLK_R$/CLKSEL	The bit clock which shifts data into D_R after the FS_R leading edge. May vary from 64 kHz to 2.048 MHz. Alternatively, may be a logic input which selects either 1.536 MHz/1.544 MHz or 2.048 MHz for master clock in synchronous mode and $BCLK_X$ is used for both transmit and receive directions (see Table 1).
$MCLK_R$/PDN	Receive master clock. Must be 1.536 MHz, 1.544 MHz or 2.048 MHz. May be asynchronous with $MCLK_X$, but should be synchronous with $MCLK_X$ for best performance. When $MCLK_R$ is connected continuously low, $MCLK_X$ is selected for all internal timing. When $MCLK_R$ is connected continuously high, the device is powered down.
$MCLK_X$	Transmit master clock. Must be 1.536 MHz, 1.544 MHz or 2.048 MHz. May be asynchronous with $MCLK_R$. Best performance is realized from synchronous operation.
FS_X	Transmit frame sync pulse input which enables $BCLK_X$ to shift out the PCM data on D_X. FS_X is an 8 kHz pulse train, see Figure 4 and Figure 5 for timing details.
$BCLK_X$	The bit clock which shifts out the PCM data on D_X. May vary from 64 kHz to 2.048 MHz, but must be synchronous with $MCLK_X$.

Copyright © 2005–2013, Texas Instruments Incorporated

PIN DESCRIPTIONS (continued)

Symbol	Function
D_X	The TRI-STATE PCM data output which is enabled by FS_X.
$\overline{TS_X}$	Open drain output which pulses low during the encoder time slot.
GS_X	Analog output of the transmit input amplifier. Used to externally set gain.
VF_XI^-	Inverting input of the transmit input amplifier.
VF_XI^+	Non-inverting input of the transmit input amplifier.

Functional Description

POWER-UP

When power is first applied, power-on reset circuitry initializes the COMBO and places it into a power-down state. All non-essential circuits are deactivated and the D_X and VF_RO outputs are put in high impedance states. To power-up the device, a logical low level or clock must be applied to the $MCLK_R$/PDN pin *and* FS_X and/or FS_R pulses must be present. Thus, 2 power-down control modes are available. The first is to pull the $MCLK_R$/PDN pin high; the alternative is to hold both FS_X and FS_R inputs continuously low—the device will power-down approximately 1 ms after the last FS_X or FS_R pulse. Power-up will occur on the first FS_X or FS_R pulse. The TRI-STATE PCM data output, D_X, will remain in the high impedance state until the second FS_X pulse.

SYNCHRONOUS OPERATION

For synchronous operation, the same master clock and bit clock should be used for both the transmit and receive directions. In this mode, a clock must be applied to $MCLK_X$ and the $MCLK_R$/PDN pin can be used as a power-down control. A low level on $MCLK_R$/PDN powers up the device and a high level powers down the device. In either case, $MCLK_X$ will be selected as the master clock for both the transmit and receive circuits. A bit clock must also be applied to $BCLK_X$ and the $BCLK_R$/CLKSEL can be used to select the proper internal divider for a master clock of 1.536 MHz, 1.544 MHz or 2.048 MHz. For 1.544 MHz operation, the device automatically compensates for the 193rd clock pulse each frame.

With a fixed level on the $BCLK_R$/CLKSEL pin, $BCLK_X$ will be selected as the bit clock for both the transmit and receive directions. Table 1 indicates the frequencies of operation which can be selected, depending on the state of $BCLK_R$/CLKSEL. In this synchronous mode, the bit clock, $BCLK_X$, may be from 64 kHz to 2.048 MHz, but must be synchronous with $MCLK_X$.

Each FS_X pulse begins the encoding cycle and the PCM data from the previous encode cycle is shifted out of the enabled D_X output on the positive edge of $BCLK_X$. After 8 bit clock periods, the TRI-STATE D_X output is returned to a high impedance state. With an FS_R pulse, PCM data is latched via the D_R input on the negative edge of $BCLK_X$ (or $BCLK_R$ if running). FS_X and FS_R must be synchronous with $MCLK_{X/R}$.

Table 1. Selection of Master Clock Frequencies

$BCLK_R$/CLKSEL	Master Clock Frequency Selected	
	TP3057	TP3054
Clocked	2.048 MHz	1.536 MHz or 1.544 MHz
0	1.536 MHz or 1.544 MHz	2.048 MHz
1	2.048 MHz	1.536 MHz or 1.544 MHz

Copyright © 2005–2013, Texas Instruments Incorporated

ASYNCHRONOUS OPERATION

For asynchronous operation, separate transmit and receive clocks may be applied. $MCLK_X$ and $MCLK_R$ must be 2.048 MHz for the TP3057, or 1.536 MHz, 1.544 MHz for the TP3054, and need not be synchronous. For best transmission performance, however, $MCLK_R$ should be synchronous with $MCLK_X$, which is easily achieved by applying only static logic levels to the $MCLK_R$/PDN pin. This will automatically connect $MCLK_X$ to all internal $MCLK_R$ functions (see Pin Description above). For 1.544 MHz operation, the device automatically compensates for the 193rd clock pulse each frame. FS_X starts each encoding cycle and must be synchronous with $MCLK_X$ and $BCLK_X$. FS_R starts each decoding cycle and must be synchronous with $BCLK_R$. $BCLK_R$ must be a clock, the logic levels shown in Table 1 are not valid in asynchronous mode. $BCLK_X$ and $BCLK_R$ may operate from 64 kHz to 2.048 MHz.

SHORT FRAME SYNC OPERATION

The COMBO can utilize either a short frame sync pulse or a long frame sync pulse. Upon power initialization, the device assumes a short frame mode. In this mode, both frame sync pulses, FS_X and FS_R, must be one bit clock period long, with timing relationships specified in Figure 4. With FS_X high during a falling edge of $BCLK_X$, the next rising edge of $BCLK_X$ enables the D_X TRI-STATE output buffer, which will output the sign bit. The following seven rising edges clock out the remaining seven bits, and the next falling edge disables the D_X output. With FS_R high during a falling edge of $BCLK_R$ ($BCLK_X$ in synchronous mode), the next falling edge of $BCLK_R$ latches in the sign bit. The following seven falling edges latch in the seven remaining bits. All four devices may utilize the short frame sync pulse in synchronous or asynchronous operating mode.

LONG FRAME SYNC OPERATION

To use the long frame mode, both the frame sync pulses, FS_X and FS_R, must be three or more bit clock periods long, with timing relationships specified in Figure 5. Based on the transmit frame sync, FS_X, the COMBO will sense whether short or long frame sync pulses are being used. For 64 kHz operation, the frame sync pulse must be kept low for a minimum of 160 ns. The D_X TRI-STATE output buffer is enabled with the rising edge of FS_X or the rising edge of $BCLK_X$, whichever comes later, and the first bit clocked out is the sign bit. The following seven $BCLK_X$ rising edges clock out the remaining seven bits. The D_X output is disabled by the falling $BCLK_X$ edge following the eighth rising edge, or by FS_X going low, whichever comes later. A rising edge on the receive frame sync pulse, FS_R, will cause the PCM data at D_R to be latched in on the next eight falling edges of $BCLK_R$ ($BCLK_X$ in synchronous mode). All four devices may utilize the long frame sync pulse in synchronous or asynchronous mode.

In applications where the LSB bit is used for signalling, with FS_R two bit clock periods long, the decoder will interpret the lost LSB as “½” to minimize noise and distortion.

TRANSMIT SECTION

The transmit section input is an operational amplifier with provision for gain adjustment using two external resistors, see Figure 8. The low noise and wide bandwidth allow gains in excess of 20 dB across the audio passband to be realized. The op amp drives a unity-gain filter consisting of RC active pre-filter, followed by an eighth order switched-capacitor bandpass filter clocked at 256 kHz. The output of this filter directly drives the encoder sample-and-hold circuit. The A/D is of companding type according to μ-law (TP3054) or A-law (TP3057) coding conventions. A precision voltage reference is trimmed in manufacturing to provide an input overload (t_{MAX}) of nominally 2.5V peak (see Transmission Characteristics). The FS_X frame sync pulse controls the sampling of the filter output, and then the successive-approximation encoding cycle begins. The 8-bit code is then loaded into a buffer and shifted out through D_X at the next FS_X pulse. The total encoding delay will be approximately 165 μs (due to the transmit filter) plus 125 μs (due to encoding delay), which totals 290 μs. Any offset voltage due to the filters or comparator is cancelled by sign bit integration.

Copyright © 2005–2013, Texas Instruments Incorporated

RECEIVE SECTION

The receive section consists of an expanding DAC which drives a fifth order switched-capacitor low pass filter clocked at 256 kHz. The decoder is A-law (TP3057) or μ-law (TP3054) and the 5th order low pass filter corrects for the sin x/x attenuation due to the 8 kHz sample/hold. The filter is then followed by a 2nd order RC active post-filter/power amplifier capable of driving a 600Ω load to a level of 7.2 dBm. The receive section is unity-gain. Upon the occurrence of FS_R, the data at the D_R input is clocked in on the falling edge of the next eight $BCLK_R$ ($BCLK_X$) periods. At the end of the decoder time slot, the decoding cycle begins, and 10 μs later the decoder DAC output is updated. The total decoder delay is ~10 μs (decoder update) plus 110 μs (filter delay) plus 62.5 μs (½ frame), which gives approximately 180 μs.



These devices have limited built-in ESD protection. The leads should be shorted together or the device placed in conductive foam during storage or handling to prevent electrostatic damage to the MOS gates.

Absolute Maximum Ratings(1)(2)

V_{CC} to GNDA		7V
V_{BB} to GNDA		−7V
Voltage at any Analog Input or Output		V_{CC}+0.3V to V_{BB}−0.3V
Voltage at any Digital Input or Output		V_{CC}+0.3V to GNDA−0.3V
Operating Temperature Range		−55°C to + 125°C
Storage Temperature Range		−65°C to +150°C
Lead Temperature	(Soldering, 10 sec.)	300°C

(1) "Absolute Maximum Ratings" indicate limits beyond which damage to the device may occur. Operating Ratings indicate conditions for which the device is functional, but do not ensure specific performance limits.
(2) If Military/Aerospace specified devices are required, please contact the Texas Instruments Sales Office/Distributors for availability and specifications.

Electrical Characteristics

Unless otherwise noted, limits printed in **BOLD** characters are ensured for V_{CC} = +5.0V ±5%, V_{BB} = −5.0V ±5%; T_A = −40°C to +85°C by correlation with 100% electrical testing at T_A = 25°C. All other limits are assured by correlation with other production tests and/or product design and characterization. All signals referenced to GNDA. Typicals specified at V_{CC} = +5.0V, V_{BB} = −5.0V, T_A = 25°C.

Symbol	Parameter	Conditions	Min	Typ	Max	Units
DIGITAL INTERFACE						
V_{IL}	Input Low Voltage				**0.6**	V
V_{IH}	Input High Voltage		**2.2**			V
V_{OL}	Output Low Voltage	D_X, I_L=3.2 mA			**0.4**	V
		SIG_R, I_L=1.0 mA			**0.4**	V
		$\overline{TS_X}$, I_L=3.2 mA, Open Drain			**0.4**	V
V_{OH}	Output High Voltage	D_X, I_H=−3.2 mA	**2.4**			V
		SIG_R, I_H=−1.0 mA	**2.4**			V
I_{IL}	Input Low Current	GNDA≤V_{IN}≤V_{IL}, All Digital Inputs	**−10**		**10**	μA
I_{IH}	Input High Current	V_{IH}≤V_{IN}≤V_{CC}	**−10**		**10**	μA
I_{OZ}	Output Current in High Impedance State (TRI-STATE)	D_X, GNDA≤V_O≤V_{CC}	**−10**		**10**	μA
ANALOG INTERFACE WITH TRANSMIT INPUT AMPLIFIER (ALL DEVICES)						
I_IXA	Input Leakage Current	−2.5V≤V≤+2.5V, VF_XI^+ or VF_XI^-	**−200**		**200**	nA
R_IXA	Input Resistance	−2.5V≤V≤+2.5V, VF_XI^+ or VF_XI^-	10			MΩ
R_OXA	Output Resistance	Closed Loop, Unity Gain		1	3	Ω
R_LXA	Load Resistance	GS_X	10			kΩ
C_LXA	Load Capacitance	GS_X			50	pF
V_OXA	Output Dynamic Range	GS_X, R_L ≥ 10 kΩ	**−2.8**		**2.8**	V
A_VXA	Voltage Gain	VF_XI^+ to GS_X	**5000**			V/V

Copyright © 2005–2013, Texas Instruments Incorporated

Electrical Characteristics (continued)

Unless otherwise noted, limits printed in **BOLD** characters are ensured for V_{CC} = +5.0V ±5%, V_{BB} = −5.0V ±5%; T_A = −40°C to +85°C by correlation with 100% electrical testing at T_A = 25°C. All other limits are assured by correlation with other production tests and/or product design and characterization. All signals referenced to GNDA. Typicals specified at V_{CC} = +5.0V, V_{BB} = −5.0V, T_A = 25°C.

Symbol	Parameter	Conditions	Min	Typ	Max	Units
F_UXA	Unity Gain Bandwidth		1	2		MHz
V_{OS}XA	Offset Voltage		**−20**		**20**	mV
V_{CM}XA	Common-Mode Voltage	CMRRXA > 60 dB	−2.5		2.5	V
CMRRXA	Common-Mode Rejection Ratio	DC Test	**60**			dB
PSRRXA	Power Supply Rejection Ratio	DC Test	60			dB
ANALOG INTERFACE WITH RECEIVE FILTER (ALL DEVICES)						
R_ORF	Output Resistance	Pin VF_RO		1	3	Ω
R_LRF	Load Resistance	VF_RO=±2.5V	600			Ω
C_LRF	Load Capacitance				500	pF
VOS_RO	Output DC Offset Voltage		**−200**		**200**	mV
POWER DISSIPATION (ALL DEVICES)						
I_{CC}0	Power-Down Current	No Load(1)		0.65	**2.0**	mA
I_{BB}0	Power-Down Current	No Load(1)		0.01	**0.33**	mA
I_{CC}1	Power-Up (Active) Current	No Load		5.0	**11.0**	mA
I_{BB}1	Power-Up (Active) Current	No Load		5.0	**11.0**	mA

(1) I_{CC0} and I_{BB0} are measured after first achieving a power-up state.

Copyright © 2005–2013, Texas Instruments Incorporated

Timing Specifications

Unless otherwise noted, limits printed in **BOLD** characters are ensured for V_{CC} = +5.0V ±5%, V_{BB} = −5.0V ±5%; T_A = −40°C to +85°C by correlation with 100% electrical testing at T_A = 25°C. All other limits are assured by correlation with other production tests and/or product design and characterization. All signals referenced to GNDA. Typicals specified at V_{CC} = +5.0V, V_{BB} = –5.0V, T_A = 25°C. All timing parameters are assured at V_{OH} = 2.0V and V_{OL} = 0.7V. See Definitions and Timing Conventions section for test methods information.

Symbol	Parameter	Conditions	Min	Typ	Max	Units
$1/t_{PM}$	Frequency of Master Clocks	Depends on the Device Used and the		1.536		MHz
		$BCLK_R$/CLKSEL Pin.		1.544		MHz
		$MCLK_X$ and $MCLK_R$		**2.048**		MHz
t_{RM}	Rise Time of Master Clock	$MCLK_X$ and $MCLK_R$			50	ns
t_{FM}	Fall Time of Master Clock	$MCLK_X$ and $MCLK_R$			50	ns
t_{PB}	Period of Bit Clock		485	**488**	15725	ns
t_{RB}	Rise Time of Bit Clock	$BCLK_X$ and $BCLK_R$			50	ns
t_{FB}	Fall Time of Bit Clock	$BCLK_X$ and $BCLK_R$			50	ns
t_{WMH}	Width of Master Clock High	$MCLK_X$ and $MCLK_R$	**160**			ns
t_{WML}	Width of Master Clock Low	$MCLK_X$ and $MCLK_R$	**160**			ns
t_{SBFM}	Set-Up Time from $BCLK_X$ High to $MCLK_X$ Falling Edge	First Bit Clock after the Leading Edge of FS_X Short Frame	**100**			ns
		Long Frame	**125**			
t_{SFFM}	Setup Time from FS_X High to $MCLK_X$ Falling Edge	Long Frame Only	**100**			ns
t_{WBH}	Width of Bit Clock High	V_{IH}=2.2V	**160**			ns
t_{WBL}	Width of Bit Clock Low	V_{IL}=0.6V	**160**			ns
t_{HBFL}	Holding Time from Bit Clock Low to Frame Sync	Long Frame Only	**0**			ns
t_{HBFS}	Holding Time from Bit Clock High to Frame Sync	Short Frame Only	**0**			ns
t_{SFB}	Set-Up Time from Frame Sync to Bit Clock Low	Long Frame Only	**115**			ns
t_{DBD}	Delay Time from $BCLK_X$ High to Data Valid	Load=150 pF plus 2 LSTTL Loads	0		140	ns
t_{DBTS}	Delay Time to $\overline{TS_X}$ Low	Load=150 pF plus 2 LSTTL Loads			140	ns
t_{DZC}	Delay Time from $BCLK_X$ Low to Data Output Disabled	C_L=0 pF to 150 pF	50		165	ns
t_{DZF}	Delay Time to Valid Data from FS_X or $BCLK_X$, Whichever Comes Later	C_L=0 pF to 150 pF	20		165	ns
t_{SDB}	Set-Up Time from D_R Valid to $BCLK_{R/X}$ Low		**50**			ns
t_{HBD}	Hold Time from $BCLK_{R/X}$ Low to D_R Invalid		**50**			ns
t_{SF}	Set-Up Time from $FS_{X/R}$ to $BCLK_{X/R}$ Low	Short Frame Sync Pulse (1 Bit Clock Period Long)	**50**			ns
t_{HF}	Hold Time from $BCLK_{X/R}$ Low to $FS_{X/R}$ Low	Short Frame Sync Pulse (1 Bit Clock Period Long)	**100**			ns
t_{HBFI}	Hold Time from 3rd Period of Bit Clock Low to Frame Sync (FS_X or FS_R)	Long Frame Sync Pulse (from 3 to 8 Bit Clock Periods Long)	**100**			ns
t_{WFL}	Minimum Width of the Frame Sync Pulse (Low Level)	64k Bit/s Operating Mode	**160**			ns

Copyright © 2005–2013, Texas Instruments Incorporated

Timing Diagrams

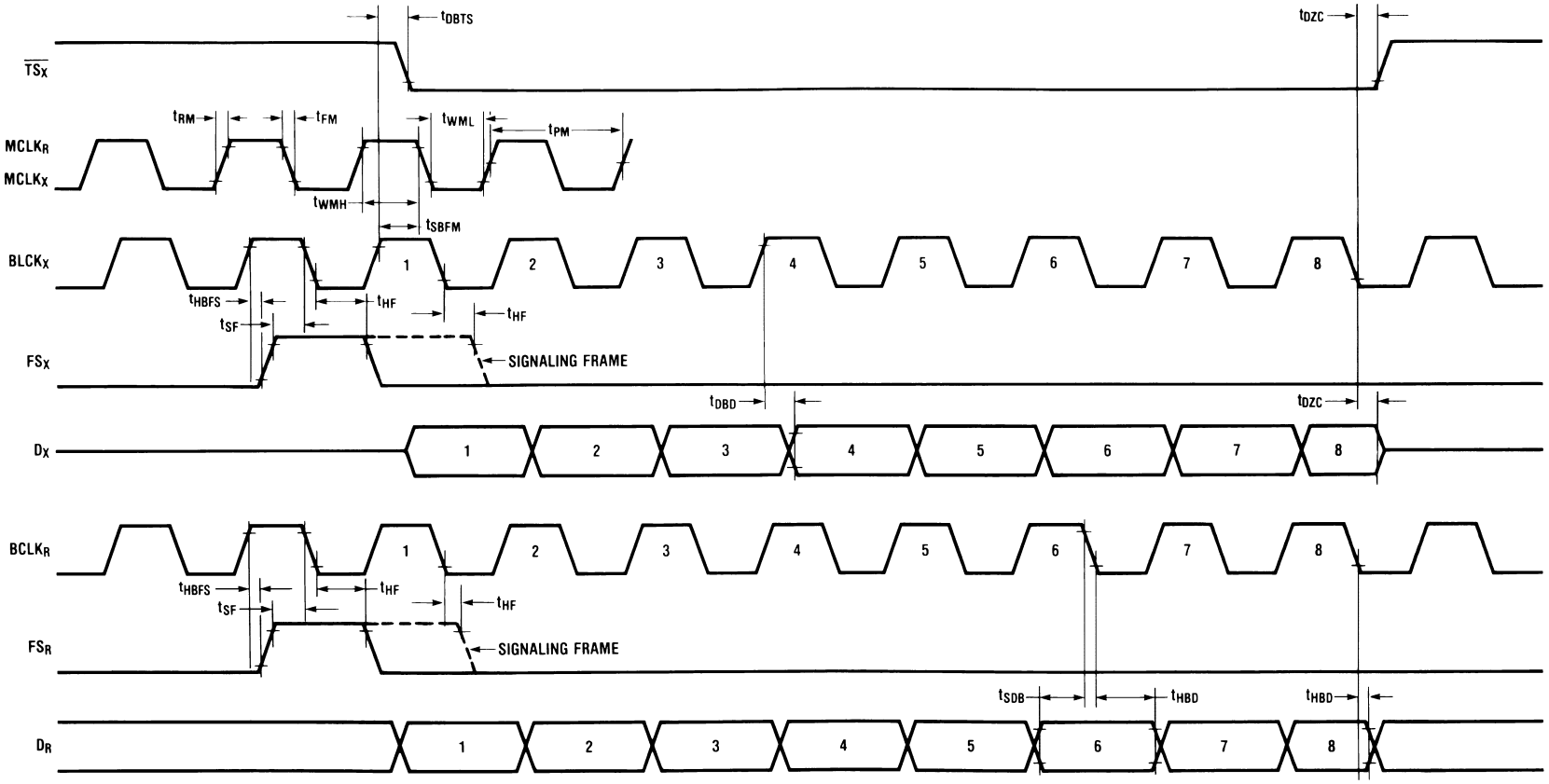

Figure 4. Short Frame Sync Timing

Copyright © 2005–2013, Texas Instruments Incorporated

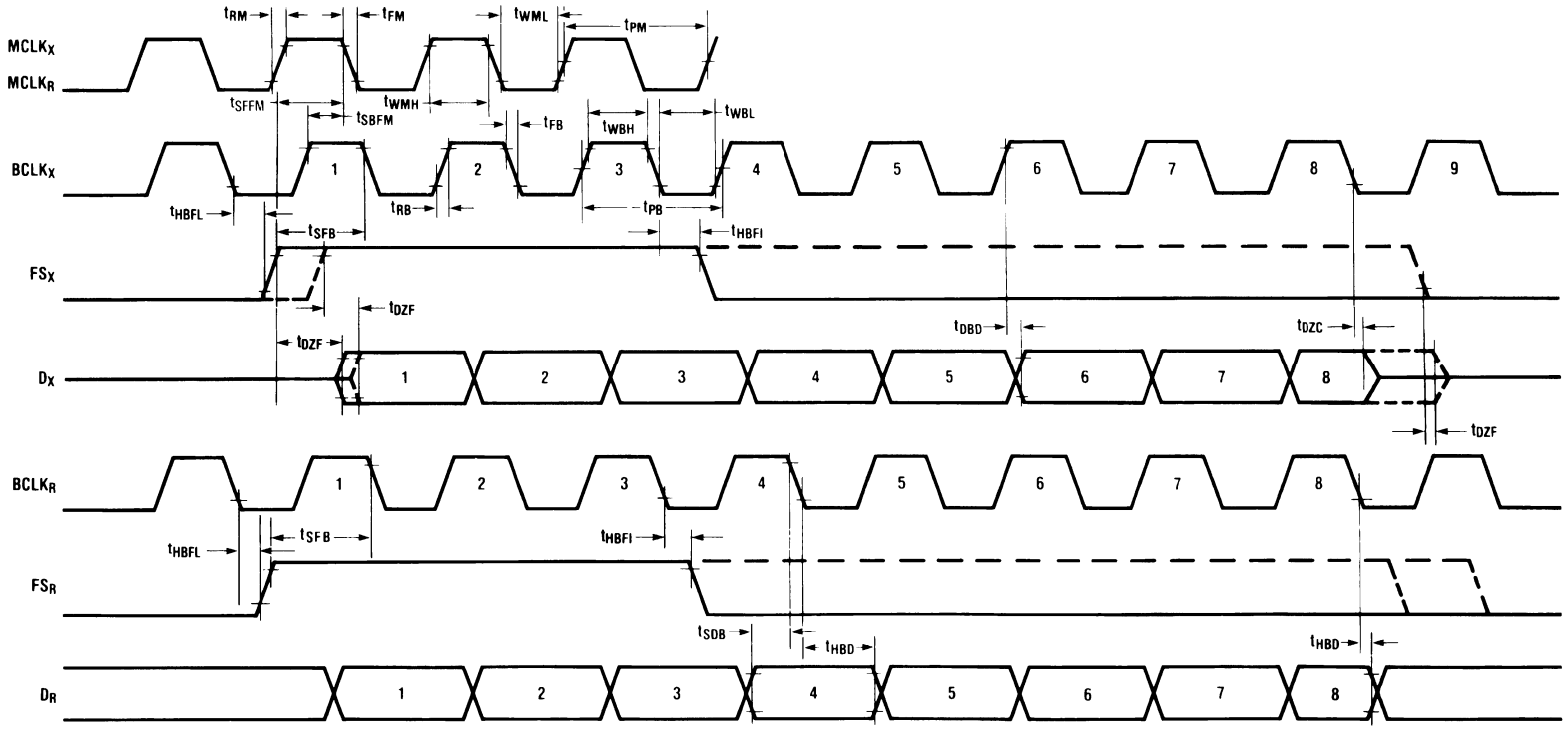

Figure 5. Long Frame Sync Timing

Transmission Characteristics

Unless otherwise noted, limits printed in **BOLD** characters are ensured for V_{CC} = +5.0V ±5%, V_{BB} = −5.0V ±5%; T_A = −40°C to +85°C by correlation with 100% electrical testing at T_A = 25°C. All other limits are assured by correlation with other production tests and/or product design and characterization. GNDA = 0V, f = 1.02 kHz, V_{IN} = 0 dBm0, transmit input amplifier connected for unity gain non inverting. Typicals are specified at V_{CC} = +5.0V, V_{BB} = −5.0V, T_A = 25°C.

Symbol	Parameter	Conditions	Min	Typ	Max	Units
AMPLITUDE RESPONSE						
	Absolute Levels (Definition of nominal gain)	Nominal 0 dBm0 Level is 4 dBm (600Ω) 0 dBm0		1.2276		Vrms
t_{MAX}		Max Overload Level				
		TP3054 (3.17 dBm0)		2.501		V_{PK}
		TP3057 (3.14 dBm0)		2.492		V_{PK}
G_{XA}	Transmit Gain, Absolute	T_A=25°C, V_{CC}=5V, V_{BB}=−5V Input at GS_X=0 dBm0 at 1020 Hz	**−0.15**		**0.15**	dB
G_{XR}	Transmit Gain, Relative to G_{XA}	f=16 Hz			−40	dB
		f=50 Hz			−30	dB
		f=60 Hz			**−26**	dB
		f=200 Hz	**−1.8**		**−0.1**	dB
		f=300 Hz–3000 Hz	**−0.15**		**0.15**	dB
		f=3152 Hz	**−0.15**		**0.20**	dB
		f=3300 Hz	**−0.35**		**0.1**	dB
		f=3400 Hz	**−0.7**		**0**	dB
		f=4000 Hz			**−14**	dB
		f=4600 Hz and Up, Measure Response from 0 Hz to 4000 Hz			**−32**	dB
G_{XAT}	Absolute Transmit Gain Variation with Temperature	Relative to G_{XA}	−0.15		0.15	dB
G_{XAV}	Absolute Transmit Gain Variation with Supply Voltage	Relative to G_{XA}	**−0.05**		**0.05**	dB
G_{XRL}	Transmit Gain Variations with Level	Sinusoidal Test Method Reference Level=−10 dBm0				
		VF_XI^+=−40 dBm0 to +3 dBm0	**−0.2**		**0.2**	dB
		VF_XI^+=−50 dBm0 to −40 dBm0	**−0.4**		**0.4**	dB
		VF_XI^+=−55 dBm0 to −50 dBm0	**−1.2**		**1.2**	dB
G_{RA}	Receive Gain, Absolute	T_A=25°C, V_{CC}=5V, V_{BB}=−5V Input=Digital Code Sequence for 0 dBm0 Signal at 1020 Hz	**−0.20**		**0.20**	dB
G_{RR}	Receive Gain, Relative to G_{RA}	f=0 Hz to 3000 Hz	**−0.15**		**0.15**	dB
		f=3300 Hz	**−0.35**		**0.1**	dB
		f=3400 Hz	**−0.7**		**0**	dB
		f=4000 Hz			**−14**	dB
G_{RAT}	Absolute Receive Gain Variation with Temperature	Relative to G_{RA}	−0.15		0.15	dB
G_{RAV}	Absolute Receive Gain Variation with Supply Voltage	Relative to G_{RA}	**−0.05**		**0.05**	dB
G_{RRL}	Receive Gain Variations with Level	Sinusoidal Test Method; Reference Input PCM Code Corresponds to an Ideally Encoded				
		PCM Level =−40 dBm0 to +3 dBm0	**−0.2**		**0.2**	dB
		PCM Level =−50 dBm0 to −40 dBm0	**−0.4**		**0.4**	dB
		PCM Level =−55 dBm0 to −50 dBm0	**−1.2**		**1.2**	dB
V_{RO}	Receive Output Drive Level	R_L=600Ω	−2.5		2.5	V

Copyright © 2005–2013, Texas Instruments Incorporated

Transmission Characteristics (continued)

Unless otherwise noted, limits printed in **BOLD** characters are ensured for V_{CC} = +5.0V ±5%, V_{BB} = −5.0V ±5%; T_A = −40°C to +85°C by correlation with 100% electrical testing at T_A = 25°C. All other limits are assured by correlation with other production tests and/or product design and characterization. GNDA = 0V, f = 1.02 kHz, V_{IN} = 0 dBm0, transmit input amplifier connected for unity gain non inverting. Typicals are specified at V_{CC} = +5.0V, V_{BB} = −5.0V, T_A = 25°C.

Symbol	Parameter	Conditions	Min	Typ	Max	Units
ENVELOPE DELAY DISTORTION WITH FREQUENCY						
D_{XA}	Transmit Delay, Absolute	f=1600 Hz		290	315	µs
D_{XR}	Transmit Delay, Relative to D_{XA}	f=500 Hz−600 Hz		195	220	µs
		f=600 Hz−800 Hz		120	145	µs
		f=800 Hz−1000 Hz		50	75	µs
		f=1000 Hz−1600 Hz		20	40	µs
		f=1600 Hz−2600 Hz		55	75	µs
		f=2600 Hz−2800 Hz		80	105	µs
		f=2800 Hz−3000 Hz		130	155	µs
D_{RA}	Receive Delay, Absolute	f=1600 Hz		180	200	µs
D_{RR}	Receive Delay, Relative to D_{RA}	f=500 Hz−1000 Hz	−40	−25		µs
		f=1000 Hz−1600 Hz	−30	−20		µs
		f=1600 Hz−2600 Hz		70	90	µs
		f=2600 Hz−2800 Hz		100	125	µs
		f=2800 Hz−3000 Hz		145	175	µs
NOISE						
N_{XC}	Transmit Noise, C Message Weighted	TP3054 (1)		12	**16**	dBrnC0
N_{XP}	Transmit Noise, P Message Weighted	TP3057 (1)		−74	**−67**	dBm0p
N_{RC}	Receive Noise, C Message Weighted	PCM Code is Alternating Positive and Negative Zero - TP3054		8	**11**	dBrnC0
N_{RP}	Receive Noise, P Message Weighted	TP3057 PCM Code Equals Positive Zero		−82	**−79**	dBm0p
N_{RS}	Noise, Single Frequency	f=0 kHz to 100 kHz, Loop Around Measurement, VF_XI^+=0 Vrms			−53	dBm0
$PPSR_X$	Positive Power Supply Rejection, Transmit	V_{CC}=5.0 V_{DC}+100 mVrms f=0 kHz−50 kHz (2)	**40**			dBC
$NPSR_X$	Negative Power Supply Rejection, Transmit	V_{BB}=−5.0 V_{DC}+ 100 mVrms f=0 kHz−50 kHz (2)	**40**			dBC
$PPSR_R$	Positive Power Supply Rejection, Receive	PCM Code Equals Positive Zero				
		V_{CC}=5.0 V_{DC}+100 mVrms				
		Measure VF_R0				
		f=0 Hz−4000 Hz	**38**			dBC
		f=4 kHz−25 kHz	**38**			dB
		f=25 kHz−50 kHz	**35**			dB
$NPSR_R$	Negative Power Supply Rejection, Receive	PCM Code Equals Positive Zero				
		V_{BB}=−5.0 V_{DC}+100 mVrms				
		Measure VF_R0				
		f=0 Hz−4000 Hz	**38**			dBC
		f=4 kHz−25 kHz	**38**			dB
		f=25 kHz−50 kHz	**35**			dB

(1) Measured by extrapolation from the distortion test result at −50 dBm0.
(2) $PPSR_X$, $NPSR_X$, and CT_{R-X} are measured with a −50 dBm0 activation signal applied to VF_XI^+.

Copyright © 2005–2013, Texas Instruments Incorporated

Transmission Characteristics (continued)

Unless otherwise noted, limits printed in **BOLD** characters are ensured for V_{CC} = +5.0V ±5%, V_{BB} = −5.0V ±5%; T_A = −40°C to +85°C by correlation with 100% electrical testing at T_A = 25°C. All other limits are assured by correlation with other production tests and/or product design and characterization. GNDA = 0V, f = 1.02 kHz, V_{IN} = 0 dBm0, transmit input amplifier connected for unity gain non inverting. Typicals are specified at V_{CC} = +5.0V, V_{BB} = −5.0V, T_A = 25°C.

Symbol	Parameter	Conditions		Min	Typ	Max	Units
SOS	Spurious Out-of-Band Signals at the Channel Output	Loop Around Measurement, 0 dBm0, 300 Hz to 3400 Hz Input PCM Code Applied at D_R.				−30	dB
		4600 Hz–7600 Hz				−30	dB
		7600 Hz–8400 Hz				−40	dB
		8400 Hz–100,000 Hz				−30	dB
DISTORTION							
STD_X, STD_R	Signal to Total Distortion Transmit or Receive Half-Channel	Sinusoidal Test Method[3]					
		Level=3.0 dBm0		**33**			dBC
		=0 dBm0 to −30 dBm0		**36**			dBC
		=−40 dBm0	XMT	**28**			dBC
			RCV	**29**			dBC
		=−55 dBm0	XMT	**13**			dBC
			RCV	**14**			dBC
SFD_X	Single Frequency Distortion, Transmit					**−43**	dB
SFD_R	Single Frequency Distortion, Receive					**−43**	dB
IMD	Intermodulation Distortion	Loop Around Measurement, VF_XI^+=−4 dBm0 to −21 dBm0, Two Frequencies in the Range 300 Hz−3400 Hz				**−41**	dB
CROSSTALK							
CT_{X-R}	Transmit to Receive Crosstalk, 0 dBm0 Transmit Level	f=300 Hz−3400 Hz			−90	**−70**	dB
		D_R=Quiet PCM Code[4]					
CT_{R-X}	Receive to Transmit Crosstalk, 0 dBm0 Receive Level	f=300 Hz−3400 Hz, VF_XI=Multitone[5]			−90	**−70**	dB

(3) TP3054/57 are measured using C message weighted filter for μ-law and psophometric weighted filter for A-law.
(4) CT_{X-R} @ 1.544 MHz $MCLK_X$ freq. is −70 dB max. 50% ±5% $BCLK_X$ duty cycle.
(5) $PPSR_X$, $NPSR_X$, and CT_{R-X} are measured with a −50 dBm0 activation signal applied to VF_XI^+.

Copyright © 2005–2013, Texas Instruments Incorporated

Encoding Format at D_X Output

	TP3054 μ-Law								TP3057 A-Law (Includes Even Bit Inversion)							
V_{IN} (at GS_X)=+Full-Scale	1	0	0	0	0	0	0	0	1	0	1	0	1	0	1	0
V_{IN} (at GS_X)=0V	1	1	1	1	1	1	1	1	1	1	0	1	0	1	0	1
	0	1	1	1	1	1	1	1	0	1	0	1	0	1	0	1
V_{IN} (at GS_X)=−Full-Scale	0	0	0	0	0	0	0	0	0	0	1	0	1	0	1	0

APPLICATIONS INFORMATION

POWER SUPPLIES

While the pins of the TP3050 family are well protected against electrical misuse, it is recommended that the standard CMOS practice be followed, ensuring that ground is connected to the device before any other connections are made. In applications where the printed circuit board may be plugged into a “hot” socket with power and clocks already present, an extra long ground pin in the connector should be used.

All ground connections to each device should meet at a common point as close as possible to the GNDA pin. This minimizes the interaction of ground return currents flowing through a common bus impedance. 0.1 μF supply decoupling capacitors should be connected from this common ground point to V_{CC} and V_{BB}, as close to device pins as possible.

For best performance, the ground point of each CODEC/FILTER on a card should be connected to a common card ground in star formation, rather than via a ground bus.

This common ground point should be decoupled to V_{CC} and V_{BB} with 10 μF capacitors.

RECEIVE GAIN ADJUSTMENT

For applications where a TP3050 family CODEC/filter receive output must drive a 600Ω load, but a peak swing lower than ±2.5V is required, the receive gain can be easily adjusted by inserting a matched T-pad or π-pad at the output. Table 2 lists the required resistor values for 600Ω terminations. As these are generally non-standard values, the equations can be used to compute the attenuation of the closest practical set of resistors. It may be necessary to use unequal values for the R1 or R4 arms of the attenuators to achieve a precise attenuation. Generally it is tolerable to allow a small deviation of the input impedance from nominal while still maintaining a good return loss. For example a 30 dB return loss against 600Ω is obtained if the output impedance of the attenuator is in the range 282Ω to 319Ω (assuming a perfect transformer).

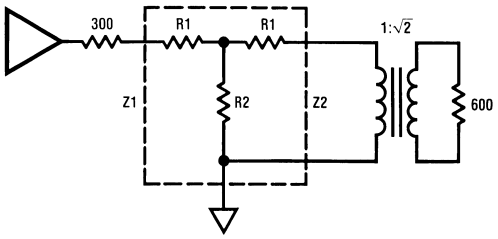

$$R1 = Z1\left(\frac{N^2+1}{N^2-1}\right) - 2\sqrt{Z1 \cdot Z2}\left(\frac{N}{N^2-1}\right)$$

$$R2 = 2\sqrt{Z1 \cdot Z2}\left(\frac{N}{N^2-1}\right)$$

Where: $N = \sqrt{\frac{\text{POWER IN}}{\text{POWER OUT}}}$

and

$$S = \sqrt{\frac{Z1}{Z2}}$$

Also: $Z = \sqrt{Z_{SC} \bullet Z_{OC}}$

Where Z_{SC} = impedance with short circuit termination

and Z_{OC} = impedance with open circuit termination

Figure 6. T-Pad Attenuator

Copyright © 2005–2013, Texas Instruments Incorporated

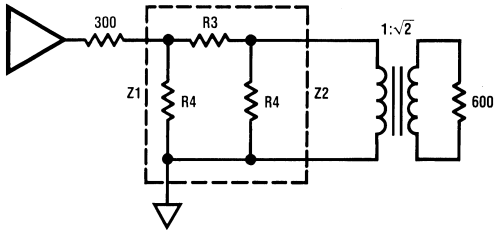

$$R3 = \sqrt{\frac{Z1.Z2}{2}}\left(\frac{N^2 - 1}{N}\right)$$

$$R3 = Z1\left(\frac{N^2 - 1}{N^2 - 2NS + 1}\right)$$

Note: See Application Note 370 for further details.

Figure 7. π-Pad Attenuator

Table 2. Attentuator Tables for Z1=Z2=300Ω (All Values in Ω)

dB	R1	R2	R3	R4
0.1	1.7	26k	3.5	52k
0.2	3.5	13k	6.9	26k
0.3	5.2	8.7k	10.4	17.4k
0.4	6.9	6.5k	13.8	13k
0.5	8.5	5.2k	17.3	10.5k
0.6	10.4	4.4k	21.3	8.7k
0.7	12.1	3.7k	24.2	7.5k
0.8	13.8	3.3k	27.7	6.5k
0.9	15.5	2.9k	31.1	5.8k
1.0	17.3	2.6l	34.6	5.2k
2	34.4	1.3k	70	2.6k
3	51.3	850	107	1.8k
4	68	650	144	1.3k
5	84	494	183	1.1k
6	100	402	224	900
7	115	380	269	785
8	379	284	317	698
9	143	244	370	630
10	156	211	427	527
11	168	184	490	535
12	180	161	550	500
13	190	142	635	473
14	200	125	720	450
15	210	110	816	430
16	218	98	924	413
18	233	77	1.17k	386
20	246	61	1.5k	366

Copyright © 2005–2013, Texas Instruments Incorporated

Typical Synchronous Application

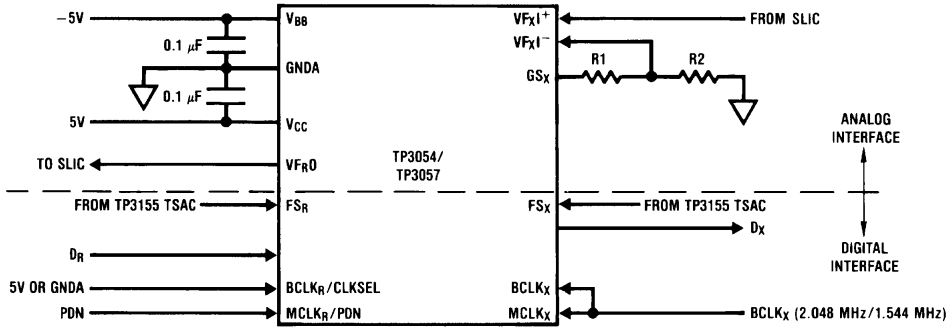

Note 1: XMIT gain $= 20 \times \log\left(\frac{R1+R2}{R2}\right)$, $(R1+R2) > 10\ K\Omega$.

Figure 8.

REVISION HISTORY

Changes from Revision B (April 2013) to Revision C	Page
• Changed layout of National Data Sheet to TI format	15

Copyright © 2005–2013, Texas Instruments Incorporated

PACKAGING INFORMATION

Orderable Device	Status (1)	Package Type	Package Drawing	Pins	Package Qty	Eco Plan (2)	Lead/Ball Finish (6)	MSL Peak Temp (3)	Op Temp (°C)	Device Marking (4/5)	Samples
TP3054WM-X	NRND	SOIC	DW	16	45	TBD	Call TI	Call TI		TP3054WM-X COMBO$R	
TP3054WM-X/63	NRND	SOIC	DW	16	1000	TBD	Call TI	Call TI		TP3054WM-X COMBO$R	
TP3054WM-X/63SN	NRND	SOIC	DW	16	1000	Green (RoHS & no Sb/Br)	CU SN	Level-3-260C-168 HR		TP3054WM-X COMBO$R	
TP3054WM-X/NOPB	NRND	SOIC	DW	16	45	Green (RoHS & no Sb/Br)	CU SN	Level-4-260C-72 HR		TP3054WM-X COMBO$R	

(1) The marketing status values are defined as follows:
ACTIVE: Product device recommended for new designs.
LIFEBUY: TI has announced that the device will be discontinued, and a lifetime-buy period is in effect.
NRND: Not recommended for new designs. Device is in production to support existing customers, but TI does not recommend using this part in a new design.
PREVIEW: Device has been announced but is not in production. Samples may or may not be available.
OBSOLETE: TI has discontinued the production of the device.

(2) Eco Plan - The planned eco-friendly classification: Pb-Free (RoHS), Pb-Free (RoHS Exempt), or Green (RoHS & no Sb/Br) - please check http://www.ti.com/productcontent for the latest availability information and additional product content details.
TBD: The Pb-Free/Green conversion plan has not been defined.
Pb-Free (RoHS): TI's terms "Lead-Free" or "Pb-Free" mean semiconductor products that are compatible with the current RoHS requirements for all 6 substances, including the requirement that lead not exceed 0.1% by weight in homogeneous materials. Where designed to be soldered at high temperatures, TI Pb-Free products are suitable for use in specified lead-free processes.
Pb-Free (RoHS Exempt): This component has a RoHS exemption for either 1) lead-based flip-chip solder bumps used between the die and package, or 2) lead-based die adhesive used between the die and leadframe. The component is otherwise considered Pb-Free (RoHS compatible) as defined above.
Green (RoHS & no Sb/Br): TI defines "Green" to mean Pb-Free (RoHS compatible), and free of Bromine (Br) and Antimony (Sb) based flame retardants (Br or Sb do not exceed 0.1% by weight in homogeneous material)

(3) MSL, Peak Temp. - The Moisture Sensitivity Level rating according to the JEDEC industry standard classifications, and peak solder temperature.

(4) There may be additional marking, which relates to the logo, the lot trace code information, or the environmental category on the device.

(5) Multiple Device Markings will be inside parentheses. Only one Device Marking contained in parentheses and separated by a "~" will appear on a device. If a line is indented then it is a continuation of the previous line and the two combined represent the entire Device Marking for that device.

(6) Lead/Ball Finish - Orderable Devices may have multiple material finish options. Finish options are separated by a vertical ruled line. Lead/Ball Finish values may wrap to two lines if the finish value exceeds the maximum column width.

Important Information and Disclaimer: The information provided on this page represents TI's knowledge and belief as of the date that it is provided. TI bases its knowledge and belief on information provided by third parties, and makes no representation or warranty as to the accuracy of such information. Efforts are underway to better integrate information from third parties. TI has taken and continues to take reasonable steps to provide representative and accurate information but may not have conducted destructive testing or chemical analysis on incoming materials and chemicals. TI and TI suppliers consider certain information to be proprietary, and thus CAS numbers and other limited information may not be available for release.

In no event shall TI's liability arising out of such information exceed the total purchase price of the TI part(s) at issue in this document sold by TI to Customer on an annual basis.

TAPE AND REEL INFORMATION

REEL DIMENSIONS

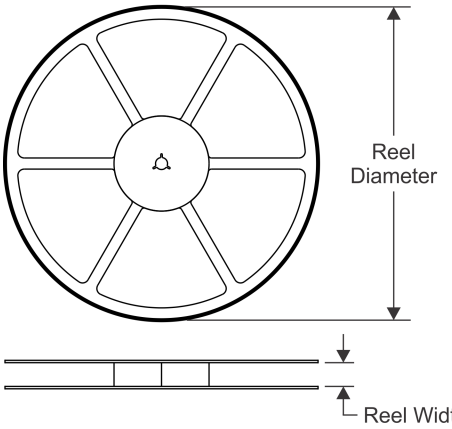

TAPE DIMENSIONS

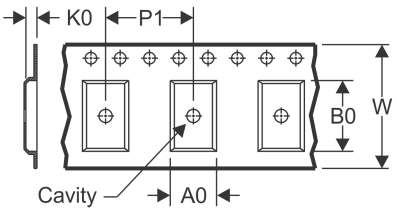

A0	Dimension designed to accommodate the component width
B0	Dimension designed to accommodate the component length
K0	Dimension designed to accommodate the component thickness
W	Overall width of the carrier tape
P1	Pitch between successive cavity centers

QUADRANT ASSIGNMENTS FOR PIN 1 ORIENTATION IN TAPE

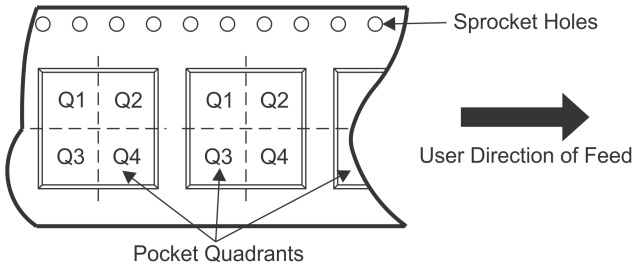

*All dimensions are nominal

Device	Package Type	Package Drawing	Pins	SPQ	Reel Diameter (mm)	Reel Width W1 (mm)	A0 (mm)	B0 (mm)	K0 (mm)	P1 (mm)	W (mm)	Pin1 Quadrant
TP3054WM-X/63	SOIC	DW	16	1000	330.0	16.4	10.9	10.7	3.2	12.0	16.0	Q1
TP3054WM-X/63SN	SOIC	DW	16	1000	330.0	16.4	10.9	10.7	3.2	12.0	16.0	Q1

TAPE AND REEL BOX DIMENSIONS

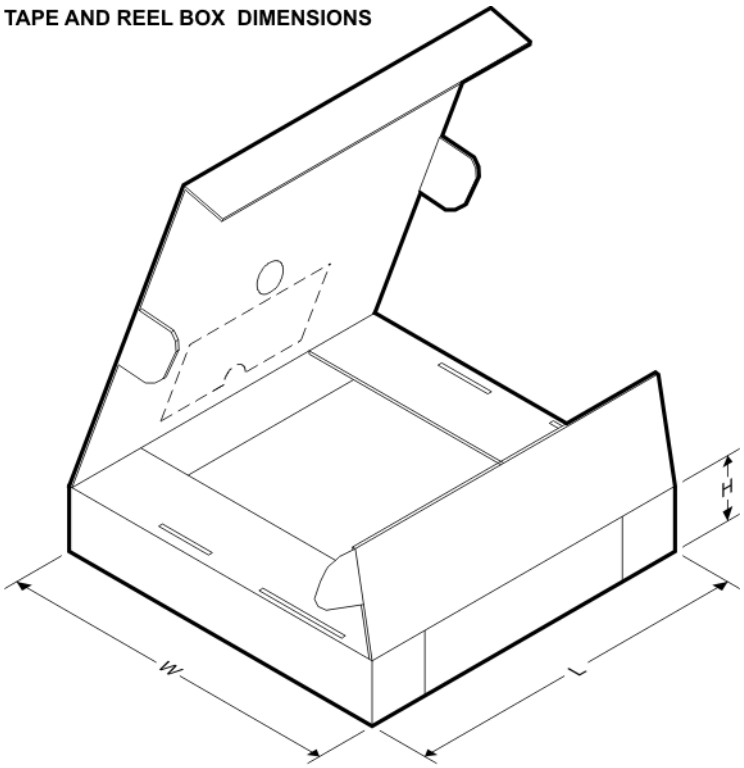

*All dimensions are nominal

Device	Package Type	Package Drawing	Pins	SPQ	Length (mm)	Width (mm)	Height (mm)
TP3054WM-X/63	SOIC	DW	16	1000	367.0	367.0	38.0
TP3054WM-X/63SN	SOIC	DW	16	1000	367.0	367.0	38.0

DW (R–PDSO–G16) PLASTIC SMALL OUTLINE

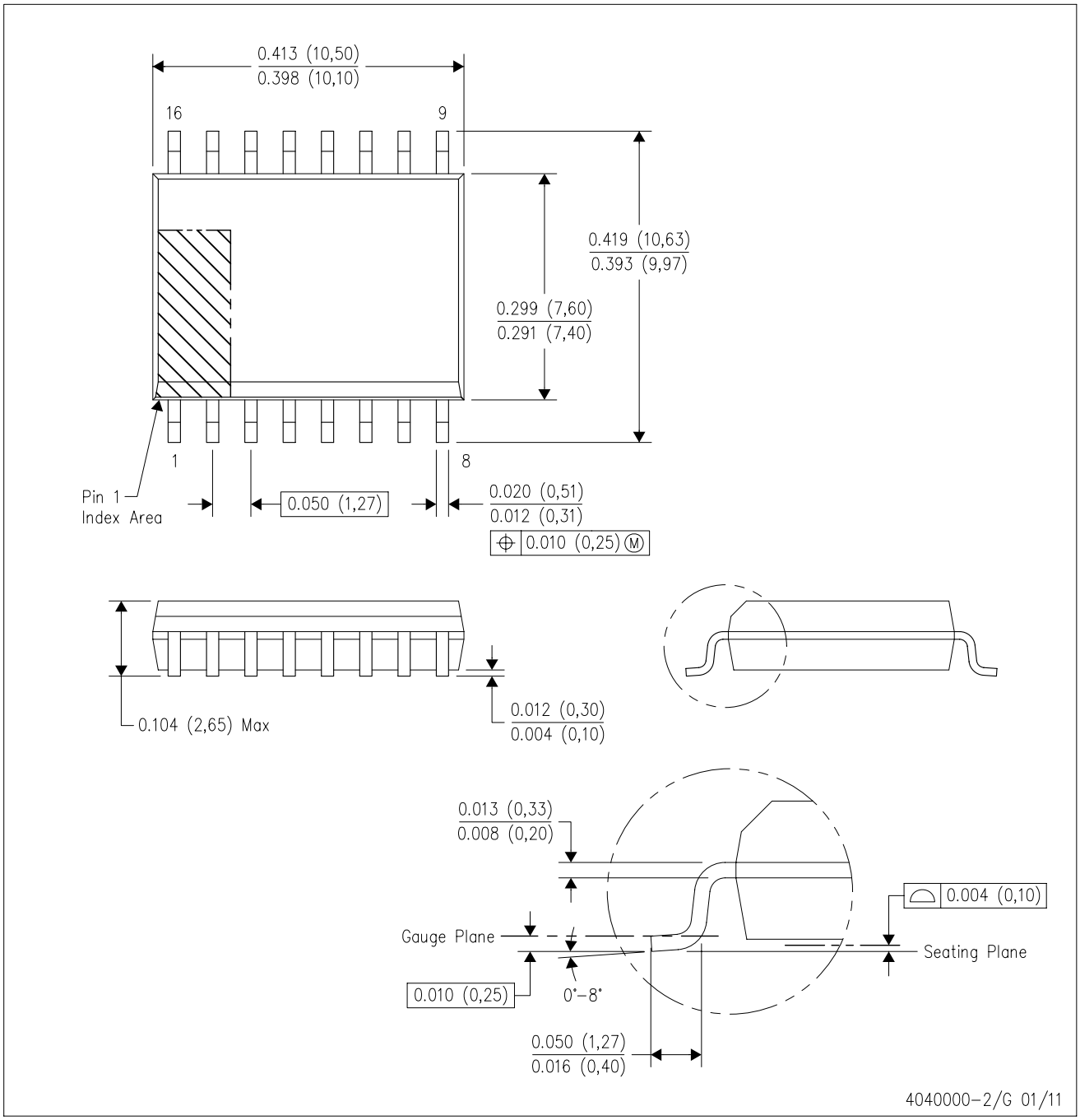

NOTES:
A. All linear dimensions are in inches (millimeters). Dimensioning and tolerancing per ASME Y14.5M–1994.
B. This drawing is subject to change without notice.
C. Body dimensions do not include mold flash or protrusion not to exceed 0.006 (0,15).
D. Falls within JEDEC MS–013 variation AA.

IMPORTANT NOTICE

Texas Instruments Incorporated and its subsidiaries (TI) reserve the right to make corrections, enhancements, improvements and other changes to its semiconductor products and services per JESD46, latest issue, and to discontinue any product or service per JESD48, latest issue. Buyers should obtain the latest relevant information before placing orders and should verify that such information is current and complete. All semiconductor products (also referred to herein as “components”) are sold subject to TI’s terms and conditions of sale supplied at the time of order acknowledgment.

TI warrants performance of its components to the specifications applicable at the time of sale, in accordance with the warranty in TI’s terms and conditions of sale of semiconductor products. Testing and other quality control techniques are used to the extent TI deems necessary to support this warranty. Except where mandated by applicable law, testing of all parameters of each component is not necessarily performed.

TI assumes no liability for applications assistance or the design of Buyers’ products. Buyers are responsible for their products and applications using TI components. To minimize the risks associated with Buyers’ products and applications, Buyers should provide adequate design and operating safeguards.

TI does not warrant or represent that any license, either express or implied, is granted under any patent right, copyright, mask work right, or other intellectual property right relating to any combination, machine, or process in which TI components or services are used. Information published by TI regarding third-party products or services does not constitute a license to use such products or services or a warranty or endorsement thereof. Use of such information may require a license from a third party under the patents or other intellectual property of the third party, or a license from TI under the patents or other intellectual property of TI.

Reproduction of significant portions of TI information in TI data books or data sheets is permissible only if reproduction is without alteration and is accompanied by all associated warranties, conditions, limitations, and notices. TI is not responsible or liable for such altered documentation. Information of third parties may be subject to additional restrictions.

Resale of TI components or services with statements different from or beyond the parameters stated by TI for that component or service voids all express and any implied warranties for the associated TI component or service and is an unfair and deceptive business practice. TI is not responsible or liable for any such statements.

Buyer acknowledges and agrees that it is solely responsible for compliance with all legal, regulatory and safety-related requirements concerning its products, and any use of TI components in its applications, notwithstanding any applications-related information or support that may be provided by TI. Buyer represents and agrees that it has all the necessary expertise to create and implement safeguards which anticipate dangerous consequences of failures, monitor failures and their consequences, lessen the likelihood of failures that might cause harm and take appropriate remedial actions. Buyer will fully indemnify TI and its representatives against any damages arising out of the use of any TI components in safety-critical applications.

In some cases, TI components may be promoted specifically to facilitate safety-related applications. With such components, TI’s goal is to help enable customers to design and create their own end-product solutions that meet applicable functional safety standards and requirements. Nonetheless, such components are subject to these terms.

No TI components are authorized for use in FDA Class III (or similar life-critical medical equipment) unless authorized officers of the parties have executed a special agreement specifically governing such use.

Only those TI components which TI has specifically designated as military grade or “enhanced plastic” are designed and intended for use in military/aerospace applications or environments. Buyer acknowledges and agrees that any military or aerospace use of TI components which have ***not*** been so designated is solely at the Buyer's risk, and that Buyer is solely responsible for compliance with all legal and regulatory requirements in connection with such use.

TI has specifically designated certain components as meeting ISO/TS16949 requirements, mainly for automotive use. In any case of use of non-designated products, TI will not be responsible for any failure to meet ISO/TS16949.

Products		**Applications**	
Audio	www.ti.com/audio	Automotive and Transportation	www.ti.com/automotive
Amplifiers	amplifier.ti.com	Communications and Telecom	www.ti.com/communications
Data Converters	dataconverter.ti.com	Computers and Peripherals	www.ti.com/computers
DLP® Products	www.dlp.com	Consumer Electronics	www.ti.com/consumer-apps
DSP	dsp.ti.com	Energy and Lighting	www.ti.com/energy
Clocks and Timers	www.ti.com/clocks	Industrial	www.ti.com/industrial
Interface	interface.ti.com	Medical	www.ti.com/medical
Logic	logic.ti.com	Security	www.ti.com/security
Power Mgmt	power.ti.com	Space, Avionics and Defense	www.ti.com/space-avionics-defense
Microcontrollers	microcontroller.ti.com	Video and Imaging	www.ti.com/video
RFID	www.ti-rfid.com		
OMAP Applications Processors	www.ti.com/omap	**TI E2E Community**	e2e.ti.com
Wireless Connectivity	www.ti.com/wirelessconnectivity		

Mailing Address: Texas Instruments, Post Office Box 655303, Dallas, Texas 75265
Copyright © 2015, Texas Instruments Incorporated